MEETING OF THE
MAYOR AND BOARD OF ALDERMAN OF THE
CITY OF RIDGELAND, MISSISSIPPI
January 7, 2025
6:00 PM

INVOCATION

PLEDGE OF ALLEGIANCE

CONSIDERATION OF MINUTES FROM PRIOR BOARD MEETING

December 17, 2024

CONSIDERATION OF MINUTES FROM PRIOR WORK SESSION

December 16, 2024

1. AGENDA ITEMS

a) Petition and Application for Dimensional Variance for SCM Development, LLC (Maison Bleu Phase 2)

b) Approve Maison Bleu Phase II Development Agreement

c) Maison Bleu Phase II - Preliminary Plat and Draft Covenants

d) Maison Bleu Phase II Pattern Book

2. CONSENT ITEMS

a) Roof Repair Station 3 Quote - Fire Department

b) Cost Resolution for Carr Meadows - Lot 11

c) Approve Drury Inn Final Plat and Covenants

d) Designate Jefcoat Fence as the lowest bidder and authorize Public Works to issue a Purchase Order for the fence replacement around the city-owned detention pond in Trace Ridge Subdivision

e) Approve a Budget Amendment for the East County Line Road Resurfacing Improvements Project - STP-7035-00(12)LPA

f) Approve Budget Amendment to transfer funds from the Advanced Water Meter ARPA/MCWI Project to the ARPA/MCWI Highland Colony Tank and Well Project

g) Approve Garver Invoice for Preliminary Engineering Services through November 2024 for the I-55 LED Lighting Conversion Project - STP-0213-00(038)LPA

h) Designate C.C. Lynch & Associates, Inc. as the Sole Source Provider for Teledyne ISCO and authorize Public Works Purchase Quoted Materials, Licenses, Cellular Service, and Labor to Install

i) Review and Approve Surplus Vehicles to be Turned Over to Insurance (Police Department)

j) Review and Approve Subscription Renewal and Sole Source Letter for GrayKey Software (Police Department)

k) Review and Approve Vehicle 299 to be Surplus and Donated to Durant Police Department (Police Department)

l) FY2024 Municipal Questionnaire

m) Sewer Adjustments

n) Budget Amendment Increasing Accounts 001-000-351 and 001-093-615 $11,250 (Finance & Administration)

3. PAYMENT OF CLAIMS

a) 195290 - 195594 and December 27, 2024 Payroll ($2,337,803.97)

4. EXECUTIVE SESSION

ADJOURNMENT

INFORMATION FOR MAYOR AND BOARD

City Attorney Statement for Services thru 12/27/2024

MEETING OF THE
MAYOR AND BOARD OF ALDERMAN OF THE
CITY OF RIDGELAND, MISSISSIPPI
December 17, 2024
6:00 PM

The Mayor opened the December 17, 2024 meeting of the Mayor and Board of Aldermen to order. Present were Alderman Chuck Gautier, Alderman Wesley Hamlin, Alderman Ken Heard, Alderman Kevin Holder, Alderman D.I. Smith, Alderman Bill Lee, City Attorney John Scanlon and City Clerk Paula Tierce. Absent was Alderman Brian Ramsey. The meeting was opened with an invocation by Parks & Recreation Director John Sidney North followed by the pledge of allegiance.

****

Members of the Mayor's Youth Counceil were present and introduced.

Mr. Jerry Barnes was present for being appointed Election Commission for the City of Ridgeland.

Next came the matter of accepting the Minutes of the December 2, 2024 Work Session and the December 3, 2024 Board of Aldermen meeting. The Minutes were accepted with no corrections noted.

Next came the matter of the items listed under the Consent Agenda. Alderman D. I. Smith moved to approve the Consent Agenda as follows:

a) Declare Property Surplus (Recreation & Parks Dept.) - Resolution Attached Hereto as Exhibit "A"

b) Approve Contract with Pyro Shows for 2025 Balloon Glow - Order Attached Hereto as Exhibit "B"

c) Authorize the Mayor to sign the Supplemental Agreement No. 1 to Task Order No. 5 for Old Agency Road Ditch Improvements - Order Attached Hereto as Exhibit "C"

d) Approve Pay Application No. 1 in the amount of $158,768.10, Approve Contract Summary Change Order No. 1 (deduction of $566.25), and Accept Closeout Documents for the Old Agency Road Guardrail Project - Order Attached Hereto as Exhibit "D"

e) Authorize the Mayor to Sign Agreement Amendment No. 3 for $10,850 to Task Order No. 1 for additional Right-of-way Services for the Purple Creek Drainage Improvements Project - Order Attached Hereto as Exhibit "E"

f) Award the Base Bid and Alternate No. 1 for City-wide Hazard Tree and Limb Removal Project to Deep Roots Construction, LLC in the amount of $975,550 - Order Attached Hereto as Exhibit "F"

g) Accept $29,171.46 Insurance Check from Sentry Insurance for the damages to the limb truck and approve a Budget Amendment to increase 001-201-635 by $29,171.46 as well as budget the insurance revenue - Resolution Attached Hereto as Exhibit "G"

h) Surplus Items - Fire Department - Resolution Attached Hereto as Exhibit "H"

i) Review and Approve Flock Safety Purchase Agreement (Police Department) - Order

Attached Hereto as Exhibit "I"

j) Special Event - Ring in Your Faith (Police Department) - Order Attached Hereto as Exhibit "J"

k) MOU - State Fire Academy (Police Department) - Order Attached Hereto as Exhibit "K"

l) Review and Approve Emergency Purchase of Tyler Technologies Record Management System (Police Department) - Resolution Attached Hereto as Exhibit "L"

m) Approve Final CE&I Invoice No. 1102125 and Final CE&I Reimbursement Request No. 10 for the East County Line Road Resurfacing Project - Order Attached Hereto as Exhibit "M"

n) Appoint Joann Pearson, Loden Snell, Jerry Barnes, and Angela Bailey to the Ridgeland Election Commission - Order Attached Hereto as Exhibit "N'

The motion was seconded by Alderman Kevin Holder and a vote was taken thereon as follows:

Vote: Aye(s): Alderman Chuck Gautier, Alderman Wesley Hamlin, Alderman Ken Heard, Alderman Kevin Holder, Alderman D.I. Smith, Alderman Bill Lee
Nay(s): None
Absent: Alderman Brian Ramsey

The Mayor then declared the Motion carried.

****

Next came the payment of claims numbered 194948 - 195289 and December 13, 2024 Payroll ($1,946,528.29). Alderman Ken Heard moved to approve. The Motion was seconded by Alderman Bill Lee and a vote was taken thereon as follows:

Vote: Aye(s): Alderman Wesley Hamlin, Alderman Ken Heard, Alderman Kevin Holder, Alderman D.I. Smith, Alderman Bill Lee
Nay(s): None
Absent: Alderman Brian Ramsey

The Mayor then declared the Motion carried.

****

Next Alderman Wesley Hamlin stated that in honor of the 125th anniversary he would like to

read the following resolution and ask Mayor McGee to join him at the podium.

WHEREAS, from his early beginnings on a dairy farm in Hickory, Mississippi, Gene F. McGee learned the value of a strong and unwavering work ethic; and

WHEREAS, Gene F. McGee began his adult life in the business field; and

WHEREAS, Gene F. McGee first began his political career as a Ridgeland Alderman in 1985 and served for four years; and

WHEREAS, Gene F. McGee went on to run for Mayor in 1989 and remains Mayor to this day, 35 years and counting; and

WHEREAS, his passion for health living has influenced his leadership, resulting in Ridgeland's development for top-tier recreational facilities, miles of mult-us trails; and

WHEREAS, through is tireless leadership and exceptional vision, Ridgeland has grown from a small town into a thriving community, known for its vibrant business environment, recreational opportunities, and educational resources; and

WHEREAS, guided by his father in God, Mayor McGee has applied his principles to every aspect of his life -- as a husband, father, grandfather, businessman, and dedicated leader of te city; and

WHEREAS, Mayor McGee's extraordinary work, dedication, vision and integrity will have everlasting effects on the City of Ridgeland;

NOW, THEREFORE, we, the Board of Aldermen, for the City of Ridgeland, do hereby execute the authority in naming Ridgeland City Hall the Gene F. McGee City Hall to honor and show appreciation and respect for his many tireless years of labor in making the City of Ridgeland a better place to live, work and play.

Alderman Wesley Hamlin moved to approve the resolution naming city hall the Gene F. McGee City Hall. Alderman Chuck Gautier seconded the motion and a vote was taken thereon as follows:

Vote: Aye(s): Alderman Wesley Hamlin, Alderman Ken Heard, Alderman Kevin Holder, Alderman D.I. Smith, Alderman Bill Lee
Nay(s): None
Absent: Alderman Brian Ramsey

The Mayor then declared the Motion carried.

2024-004906

****

There being no further business before the Board of Aldermen, the meeting was adjourned at 6:09 p.m.

WITNESS MY SIGNATURE, this the 20th day of December, 2024.

GENE F. MCGEE, MAYOR

ATTEST:

PAULA TIERCE, CITY CLERK

CITY OF RIDGELAND, MADISON COUNTY, MISS. CORPORATE 1899 SEAL

2024-004899

MINUTES OF THE SPECIAL MEETING
OF THE MAYOR AND BOARD OF ALDERMEN
OF THE CITY OF RIDGELAND
DECEMBER 16, 2024
6:00 P.M.

The Mayor opened the special called meeting of the Mayor and Board of Aldermen. Present were Alderman Ken Heard, Alderman D. I. Smith, Alderman Wesley Hamlin, Alderman Bill Lee, Alderman Kevin Holder, Alderman Chuck Gautier, City Attorney John Scanlon, and City Clerk Paula Tierce. Absent Alderman Brian Ramsey.

Lake McGee, Hallie Dale, and Sarah Hart of the Mayor's Youth Council that were present were introduced.

The City Clerk adjudicated that proper notice was made; a copy of which is attached hereto as Exhibit "A".

The Mayor presented the proposed agenda for the regular meeting scheduled on Tuesday, December 17, 2024. Each item was discussed with no action being taken by the Board of Aldermen.

The meeting concluded at 6:21 p.m.

WITNESS MY SIGNATURE, this the 20th day of December, 2024.

GENE F. MCGEE, MAYOR

ATTEST:

Paula Tierce, City Clerk

CITY OF RIDGELAND, MADISON COUNTY, MISS. CORPORATE 1899 SEAL

Mills, Scanlon, Dye & Pittman

ATTORNEYS AT LAW
800 Avery Boulevard North, Suite 101
Ridgeland, Mississippi 39157

Jerry L. Mills
John P. Scanlon
Zachary L. Giddy
John T. Wakeland

Edwin L. Pittman, Of Counsel

Telephone:
(601) 957-2600
Facsimile:
(601) 957-7440

Brad Dye (1933-2018)
James H. Gabriel (1948-2016)
Carolyn B. Mills (1947-2017)

December 23, 2024

Mayor Gene F. McGee
Alderman Ken Heard
Alderman Chuck Gautier
Alderman Kevin Holder
Alderman Brian Ramsey
Alderman Bill Lee
Alderman Wesley Hamlin
Alderman D. I. Smith
Post Office Box 217
Ridgeland, MS 39158

Re: Zoning Report for December 5, 2024

Dear Mayor and Board:

We report on the Zoning Board meeting of December 5, 2024. Enclosed for your consideration, please find the following:

1. Minutes of the December 5, 2024, Zoning Board meeting;

2. Order Approving the Petition and Application for Dimensional Variance for SCM Development, LLC; and

3. Resolution Denying the Petition and Application for Dimensional Variance for SCM Development, LLC.

If you have any questions or require additional information, please do not hesitate to call us.

Sincerely,

Mills, Scanlon, Dye & Pittman

Zachary L. Giddy

ZLG/mmh
Enclosure(s)
Cc: Jerry L. Mills, Esq. *(Via Email)*
John P. Scanlon, Esq. *(Via Email)*

MINUTES OF THE MEETING
OF THE ZONING BOARD
OF THE CITY OF RIDGELAND, MISSISSIPPI

A meeting of the Zoning Board of the City of Ridgeland, Mississippi (the "Board") was duly called, held, and conducted on Thursday, December 5, 2024, at 6:00 o'clock p.m. in the Ridgeland City Hall in the City of Ridgeland, Madison County, Mississippi.

The following members were present, to-wit:

David Dunbar
Don Roberts
Bernie Giessner
Michelle Caballero
Theresa Kennedy
Judy Rice

Absent:

Drew Malone
Kim Lovato

Also present:

Zachary L. Giddy, Attorney
Jordan Lohman, City of Ridgeland

*** * * * * * * * * * * * * ***

Chairman Bernie Giessner called the meeting to order. Roll was called and it was announced that a majority of the voting members of the Board were present, and that said number constituted a quorum to conduct business.

Bernie Giessner led the Pledge of Allegiance and Don Roberts opened the meeting with prayer.

All members of the Board present acknowledged receipt of the agenda and the agenda was as follows:

1. Call to Order/Invocation.

2. Adoption of Minutes.

3. Public Hearing for Petition and Application for Dimensional Variance for **SCM Development, LLC** – *Petitioner*

   Property Address/Description:
   Maison Bleu / Jackson Street

   Tax Parcel No:
   072D-19D-076/03.00
   (December 5, 2024)

4. Old Business/New Business.

5. Adjourn

The Board considered the Minutes of the November 21, 2024, meeting. Ms. Caballero moved to approve the minutes as written. The motion was seconded by Mr. Roberts and approved unanimously.

Public Hearing for Petition and Application for Dimensional Variance for SCM Development, LLC

Mr. Bernie Giessner opened the Public Hearing on the Petition and Application for Dimensional Variance for SCM Development, LLC for property located north of Jackson Street and the Maison Bleu Subdivision in the City of Ridgeland and being identified by Tax Parcel No. 072D-19D-076/03.00. The subject property is presently zoned R-4. Mr. Ken Harmon appeared and spoke on behalf of the Petition confirming notice was sent. Mr. Harmon stated Petitioner is requesting a dimensional variance from setback requirements of Section 250.04 of the Zoning Ordinance to reduce the minimum setbacks to 15' front, 5' side, and 10' rear. Petitioner is not requesting any change to the side setbacks. Mr. Matt Herforth was also present on behalf of the petition. Jordan Lohman verified all required legal service of process had been accomplished.

Mr. Harmon stated the same reduction of setbacks were approved for Phase I of Maison Bleu. Mr. Harmon stated that Petitioner believes that the reduced setbacks would allow for larger homes to be built therefore increasing the economic impact on the city. Proposed homes will be a minimum 1,800 sq. ft.

Questions were raised regarding drainage concerns. Mr. Vitart, representative of developer, addressed the drainage concerns and stated the development agreement addresses all of the concerns brough by the City. He further stated that any retaining wall must be approved by the City per the terms of the development agreement.

Those in favor were given an opportunity to respond.

Bobby Bassett, neighboring landowner appeared and spoke stating he was provided a petition signed by other neighbors ("Exhibit A"). Mr. Bassett discussed architectural standards for Maison Bleu II are not satisfied due to the homes in Maison Bleu I and Maison Bleu II are dissimilar. Mr. Bassett further stated he is in favor of granting the dimensional variance; however, wants architectural standards addressed.

Mr. Jerry "Trey" Hess, neighboring landowner appeared and spoke stating he attended the April meeting where previous petition was tabled to address concerns over drainage in Phase I. Mr. Hess pointed to the draft development agreement which creates a homeowners' association and that at the present time, Herforth is the sole member of the current homeowners' association. See Exhibit XX attached hereto. Mr. Hess stated the homeowners' association owns the detention pond. Mr. Hess further stated that he recommends approval of the dimensional variance with the conditions that: 1) Maison Bleu Homeowners' Association will hold meeting and transfer powers to a duly elected Homeowners' Association Board within sixty (60) days; and, (2) that the Homeowners' Association be a part to the Development Agreement. ("Exhibit B").

Mr. Harmon advised the Zoning Commissioners that the transition of power meeting for the Homeowners' Association has been scheduled for January 9, 2025.

Opposition was given an opportunity to respond, but there was no opposition present.

Chairman Bernie Giessner closed the Public Hearing and called for a vote on the Petition. On motion by Mr. Dunbar and seconded by Mr. Roberts, the Board present voted unanimously to recommend to the Mayor and Board of Aldermen that they approve the dimensional variance without conditions to reduce the minimum setbacks to 15' front, and 10' rear on the subject property in the R-4 Zero Lot Line Residential District.

OLD BUSINESS

None.

NEW BUSINESS

None.

There was no further business to be presented.

ADJOURN

Mr. Roberts moved that the meeting be adjourned. The motion was seconded by Mr. Dunbar and approved unanimously.

WITNESS OUR HANDS, this the _____ day of _____, 2024.

_____
BERNIE GIESSNER, Chairman

_____
MICHELLE CABALLERO, Vice Chairman/Secretary

Petition to the City of Ridgeland Zoning Board

We, the homeowners of Maison Bleu Subdivision, Phase I, respectfully request that the Zoning Board of the City of Ridgeland **"Approve"** the Petition and Application for Dimensional Variance submitted by SCM Development LLC with this exception. Additionally, we request that this petition along with attachments be formally entered into the record to ensure its consideration and review during the next regular meeting of the Mayor and Board of Aldermen.

We strongly reject the MBII catalog and Architectural finishes of homes presented to us by the City on December 2nd, 2024.

We trust that the Zoning Board and City officials will carefully review this request along with its attachments and take the necessary steps to promote unity and quality in our growing neighborhood.

Zoning Board letter along with recommendations (Attachment A-J) attached to petition

Home Owners Name	Address	Signature
Mara Kirby	127 Salvo Dr	Mara Kirby
Kim Bodlos	132 Salvo Dr	Kim Bodlos
Beverly Culbertson	130 Salvo Dr	Beverly Culbertson
Paul Harris	127 Bleu	[illegible]
Joe Schneeberg	128 Bleu	Joe Schneeberg
Karreen Dewese	116 Bleu	Karreen Dewese
Gwen Richmond	131 Salvo Dr.	Gwen Richmond
[illegible]	106 Bleu Dr	John Grissett
Lori Fast	107 Bleu Dr.	Lori Fast
Sheila Stagg	111 Bleu Dr.	[illegible]
Melissa McNaull	111 Bleu Dr	M. McNaull
Alberta Yebsah-Ohwofasa	113 Bleu Drive	[illegible]
Monday Ohwofasa	113 Bleu Drive	[illegible]
Wesley Lutken	191 De Young Dr	W Lutken

"Exhibit A"

Home Owners Name	Address	Signature
Alyssa Sobiesk	136 Salvo Drive	Alyssa Sobiesk
Dylan Sobiesk	136 Salvo Drive	[illegible]
Denise Streety	125 Salvo Dr.	Denise Streety
Joyce Wright	129 SALVO DR.	Joyce S. Wright
Brenda N Johnson	115 Bleu Dr Ridgeland	Brenda N Johnson
Bobby Booth	117 Bleu Dr Ridgeland	[illegible]
Fred A Johnson	115 Bleu Dr	[illegible]
Sarah Grissett	106 Bleu Dr	Sarah Grissett
Kenny Grissett	106 Bleu Dr.	[illegible]
JERE HESS	110 BLEU DR.	[illegible]
[illegible]	110 Bleu Dr.	[illegible]
[illegible]	112 Bleu Dr.	[illegible]
[illegible]	112 Bleu Drive	[illegible]
Barbara Loftin	114 Bleu Dr.	Barbara Loftin
[illegible]	118 Bleu Dr	[illegible]

Attachment A

Maison Bleu Phase I Petition to the Zoning Board with Signatures

Date: December 5, 2024

To: Zoning Board / City of Ridgeland

From: Bobby Bassett, Resident Phase I, Maison Bleu Subdivision
117 Bleu Dr, Ridgeland, MS

Re: Petition and Application for Dimensional Variance

Petitioner: SCM Development LLC

Subject: Proposed Phase II of Maison Bleu Subdivision

To Whom It May Concern,

My name is Bobby Bassett, and I, along with my wife, Betty, reside at 117 Bleu Drive in the Maison Bleu Subdivision in Ridgeland, Mississippi. While this petition is presented on behalf of our household, it also reflects the shared concerns of many neighbors, whose signatures are included as *Attachment A*.

Background

On April 18, 2024, homeowners from the Maison Bleu Subdivision attended the Zoning Board meeting regarding SCM Development LLC's application for a dimensional variance. At that meeting, we requested the Board "table" the variance request until the developer addressed a "Punch List" of outstanding items and resolved other concerns outlined in the original Developer's Agreement. After hearing from affected homeowners, the Zoning Board granted that request.

Subsequently, on November 12, 2024, the City provided Maison Bleu Phase I residents with the latest Developer's Agreement (*Attachment E*) and the Supplemental Declaration of Covenants for MB Phase II (*Attachment F*). These documents were shared with homeowners on November 13, 2024, for review and feedback.

Concerns Regarding Architectural Standards

Despite these efforts, a significant concern remains regarding the lack of clearly defined architectural guideline standards to ensure continuity between Phase I and Phase II. The latest MB II Supplemental Declaration and Developer's Agreement Architectural Standards do not adequately align with the architecural standards originally provided to MB Phase I residents.

In some areas, they also fail to align with the original Declaration of Covenants, Conditions, and Restrictions for Maison Bleu Phase I (Attachment I).

Furthermore, no Architectural Review Committee was established for Phase I or Architectural Guidelines and Standards [AGS] filed with Covenants which left room for inconsistencies in implementation within our own neighborhood. Evidence of potential inconsistent variations or lack of can be seen in the architectural drafts provided by SCM Development (*Attachment H)* and (Attachment I) which are respectively 2013 and 2024 Architectural Guidelines and Standards [AGS] for Maison Bleu, Phase I.

To simplify the Architectural Guidelines and Standards [AGS], we have provided a comparison of notable changes, deletions, or omissions between Phase I and Phase II architectural guidelines (*Attachment J*).

However, what truly caught our attention to the lack of understanding for our neighborhood is the catalog of houses for MBII (*Attachment C*) presented to us on December, 2nd, 2024 by the City. These homes, along with the finishes, absolutely do not reflect the character, look, or feel of the *original* concept for Maison Bleu Phase I or II (Attachment J).

To put it bluntly, The current prospective Developers of Phase II have made *no* effort to match anything in Phase I to create a seamless transition from Phase I to Phase II (Attachment D).

Support for Dimensional Variance with Conditions

In light of SCM Development's good faith efforts to address the majority of Punch List items, we support granting the dimensional variance **but strongly reject** the current catalog of MB II homes along with their architectural finishes!

Requests for Action

We respectfully request the following:

1. **Inclusion in Public Record:** That this document, along with all its attachments (A-J), be entered into the Administrative Record for this public hearing scheduled on December 5, 2024.
2. **Review:** The Mayor and Board of Aldermen thoroughly review and understand Maison Blues Phase I recommendations supporting attachments.
3. **Collaboration:** The Mayor and Board identify deficiencies, and direct, recommend, or require collaboration among all stakeholders. This collaboration is essential to ensure the architectural standards for Maison Bleu, Phase I are considered in the development and consistent and harmonious with those of MB II to create a seamless transition.

Conclusion

Maintaining alignment in architectural standards is vital to preserving the aesthetic integrity and property values within our community. We appreciate your time and consideration in addressing these concerns to uphold the standards and continuity of the Maison Bleu Subdivision and the City of Ridgeland.

Respectfully submitted,
Bobby and Betty Bassett
117 Bleu Drive
Maison Bleu Subdivision
Ridgeland, Mississippi

Attachment Index

A. Maison Bleu Phase I Petition
B. MB II Catalog of Homes
C. MB I Pictures of Homes within Maison Bleu Phase I
D. MB II Developer's Agreement Nov 2024
E. MB II Supplemental Declaration of Covenants 2024
F. MB I Filed Declaration of Covenants, Condition and Restrictions
G. MB I Draft of Architectural Guidelines 2013
H. MB I Draft of Architectural Guidelines 2024
I. MB II Architectural Standards found in Supplemental Declaration of Covenants, Conditions and Restrictions
J. Side by Side Comparison of Architectural Guidelines and Standards Maison Bleu, Phase I and MB II

Attachment B

MB II Catalog of Homes

MAISON BLEU PHASE II

A DISTINCTIVE GATED COMMUNITY WITH RESTRICTIVE COVENANTS

Maison Bleu

Ridgeland, MS

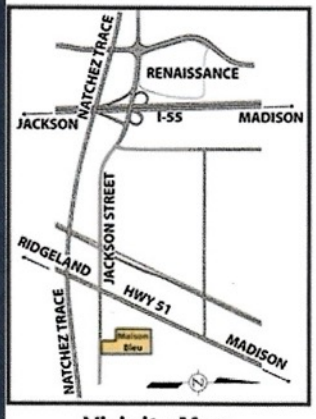

Vicinity Map

EXTERIOR BRICK

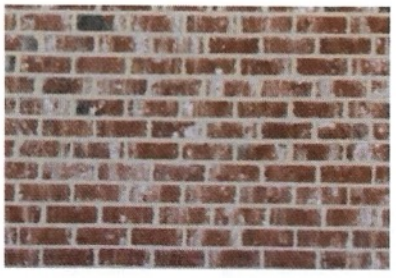

Old Towne

Bourbon Street

Graystone

Ansley Park

Berkley

Brookhaven

Mosstown

Magnolia

SQUARE FEET SCHEDULE	
LIVING AREA	1,884
FRONT PORCH	109
REAR PORCH	130
GARAGE	431
TOTAL UNDER ROOF	2,554

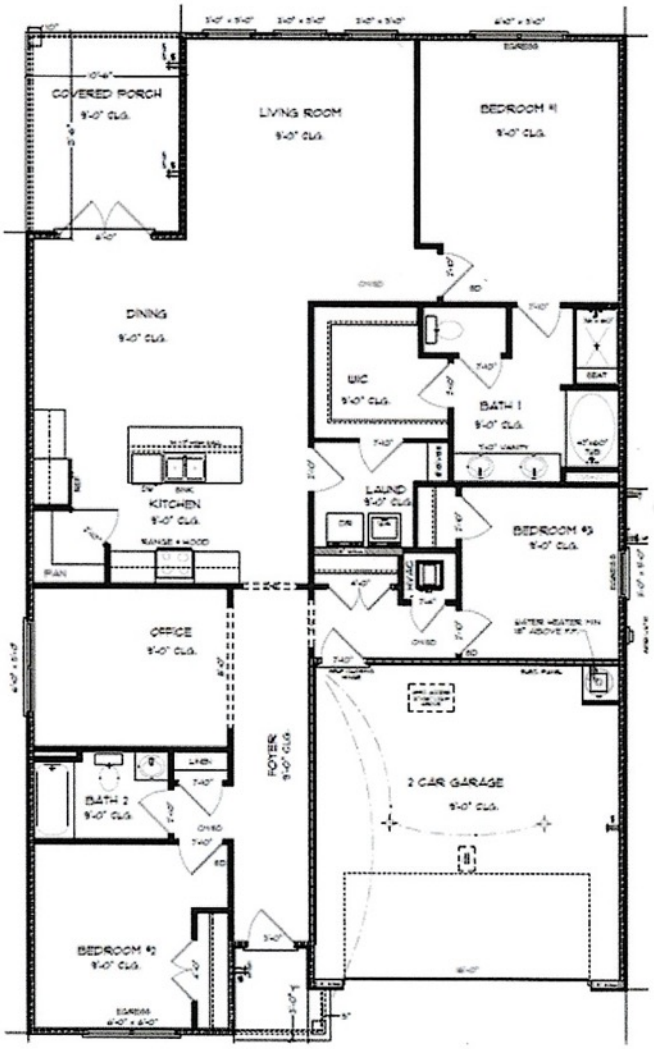

SQUARE FEET SCHEDULE	
LIVING AREA	2018
FRONT PORCH	147
REAR PORCH	189
GARAGE	439
TOTAL UNDER ROOF	2793

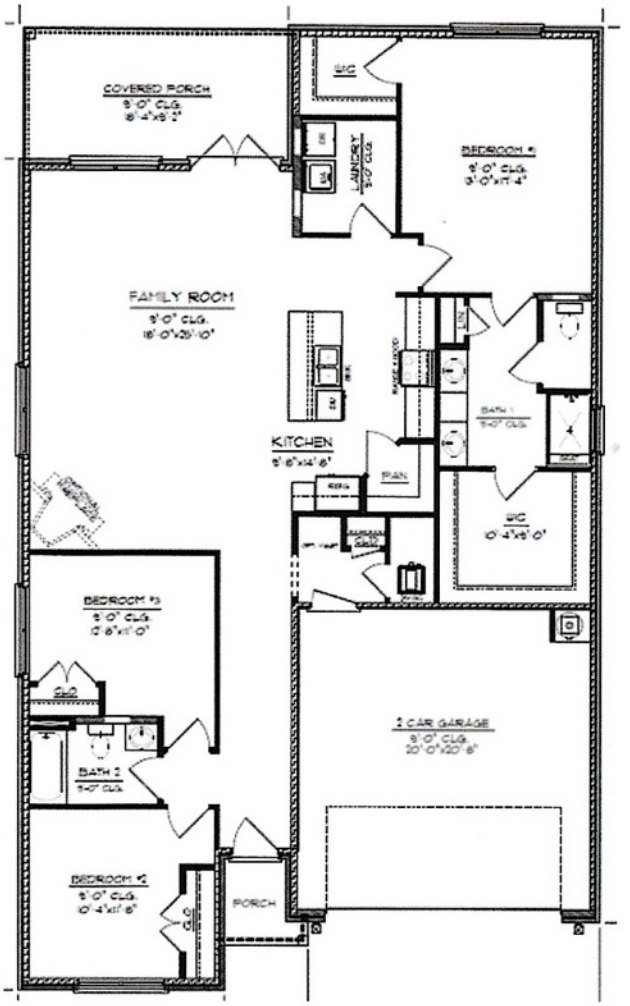

SQUARE FEET SCHEDULE	
LIVING AREA	1830
FRONT PORCH	18
REAR PORCH	88
GARAGE	416
-	-
TOTAL UNDER ROOF	2296

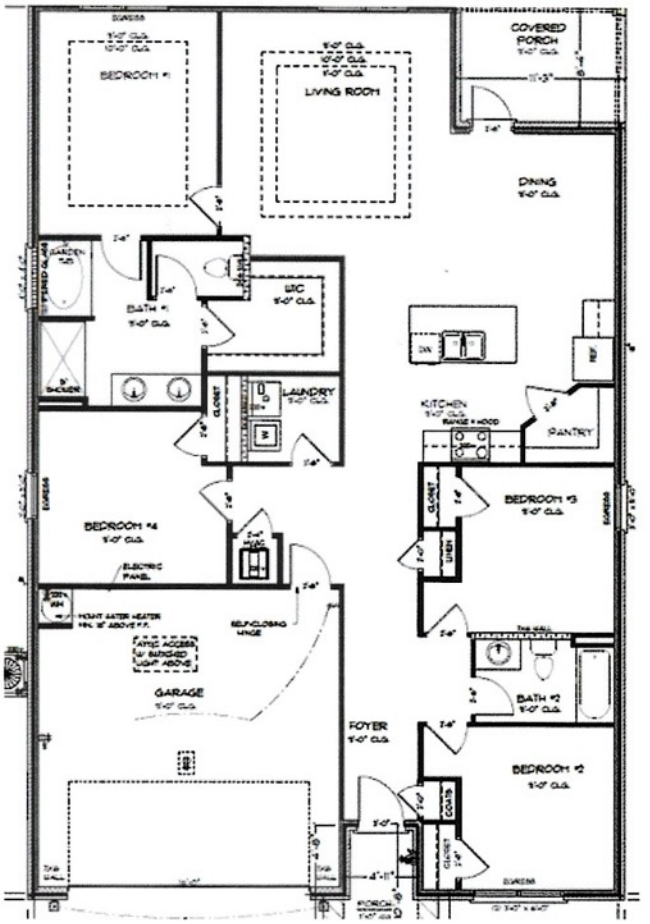

SQUARE FEET SCHEDULE	
LIVING AREA	2018
FRONT PORCH	147
REAR PORCH	189
GARAGE	439
TOTAL UNDER ROOF	2793

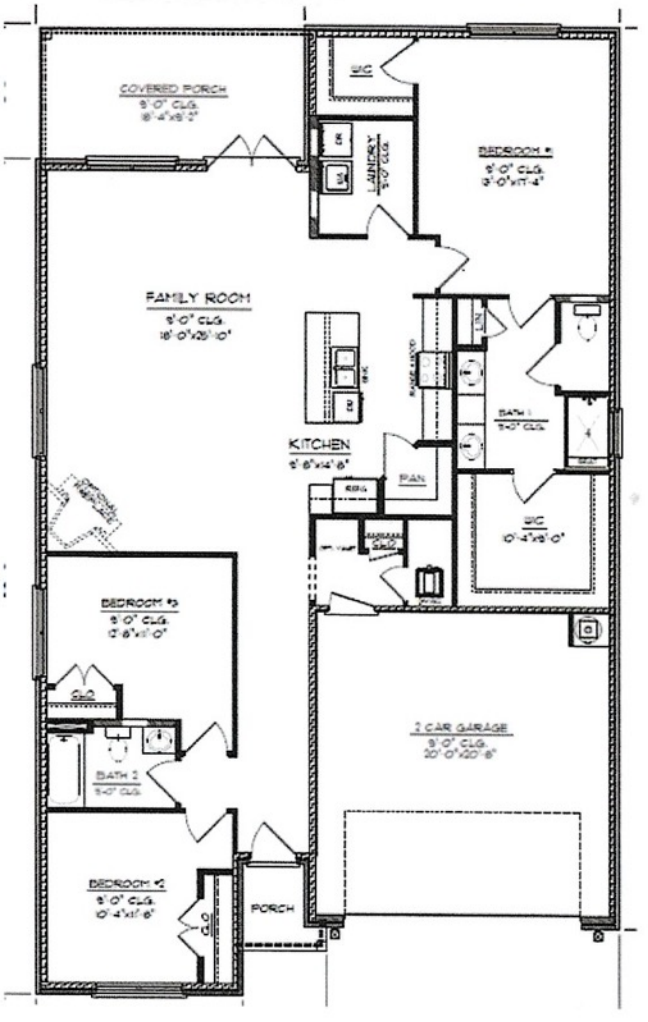

SQUARE FEET SCHEDULE	
LIVING AREA	1830
FRONT PORCH	18
REAR PORCH	88
GARAGE	416
-	-
TOTAL UNDER ROOF	2296

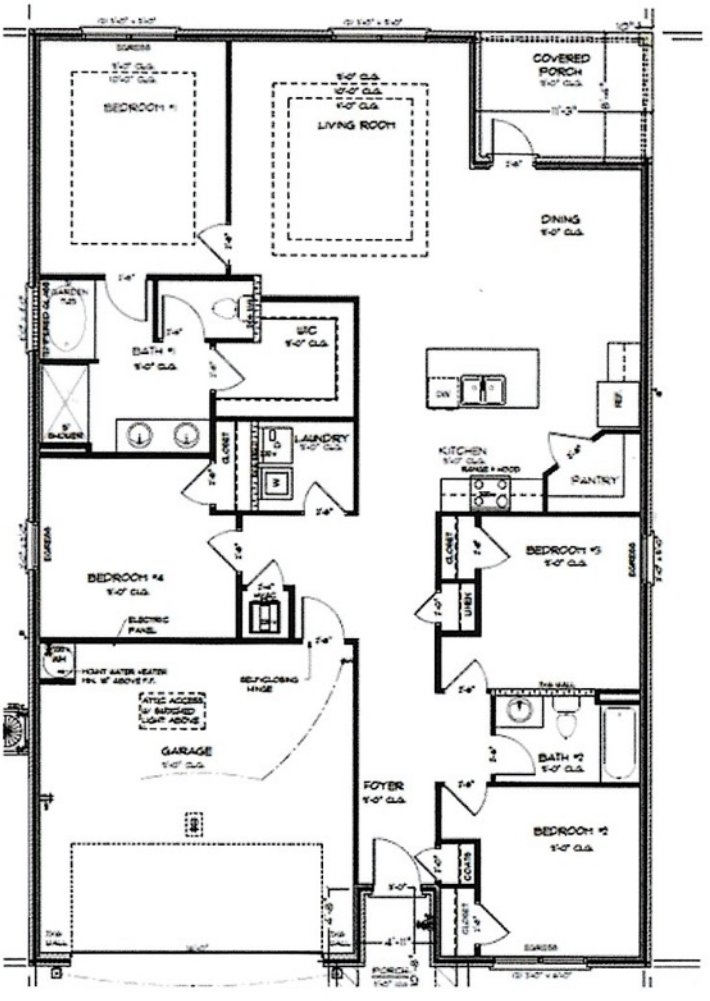

SQUARE FEET A SCHEDULE	
LIVING AREA	2017
FRONT PORCH	24
REAR PORCH	108
GARAGE	422
-	-
TOTAL UNDER ROOF	2571

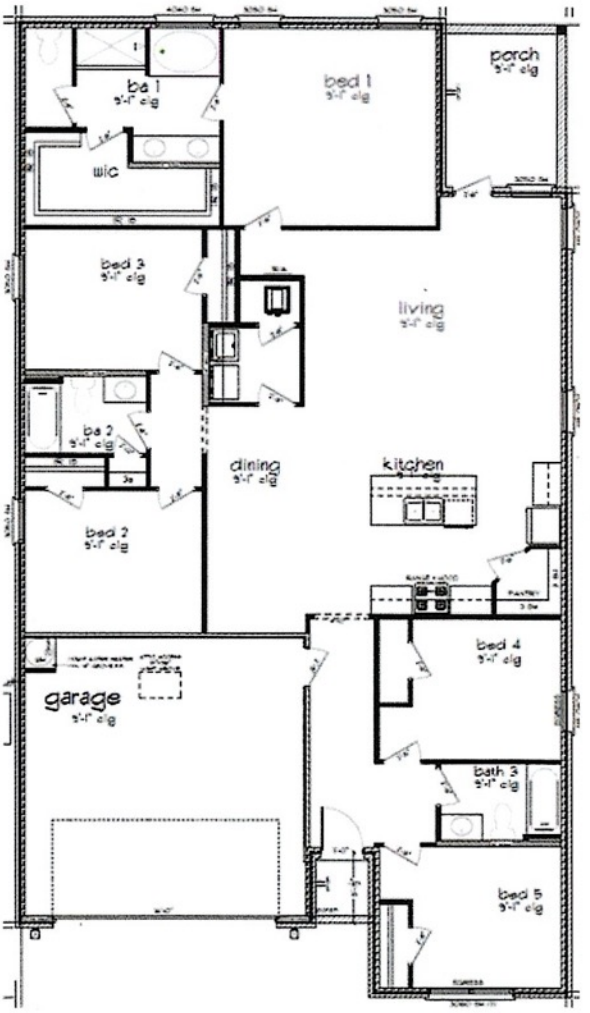

SQUARE FEET SCHEDULE	
LIVING AREA	1,884
FRONT PORCH	109
REAR PORCH	130
GARAGE	431
TOTAL UNDER ROOF	2,554

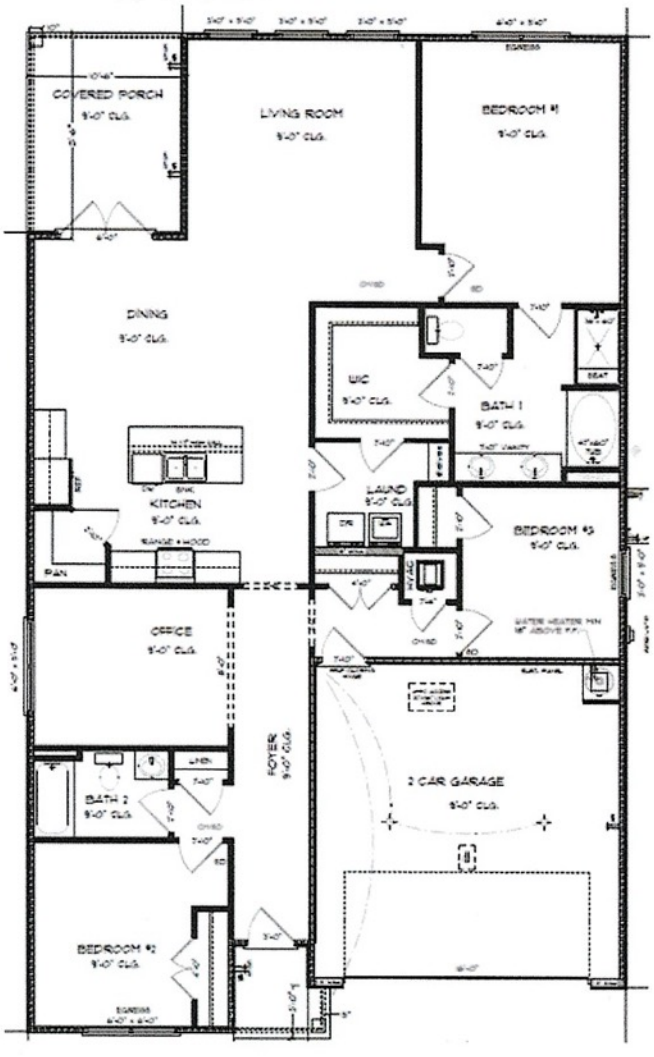

SQUARE FEET A SCHEDULE	
LIVING AREA	2017
FRONT PORCH	24
REAR PORCH	108
GARAGE	422
-	-
TOTAL UNDER ROOF	2571

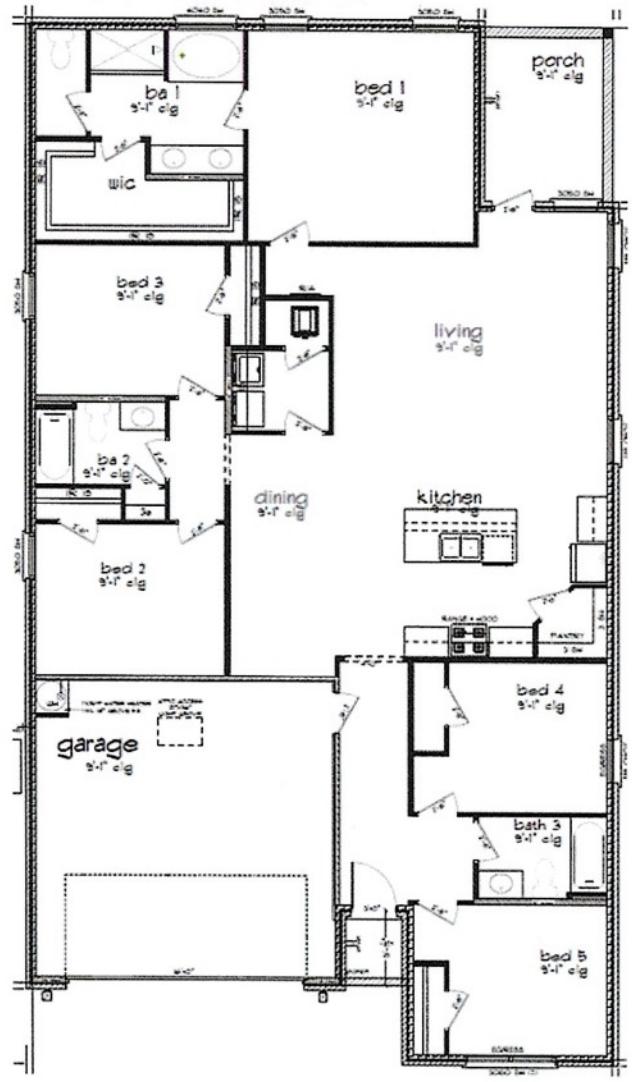

Attachment C

Maison Bleu Phase I
Pictures of Homes within Maison Bleu, Phase I

Maison Bleu Subdivision

A Distinctive Community With Restrictive Covenants Like Courtyards!
Come Sit and Enjoy Your Neighbors!

There are minimal amenities in Maison Bleu other than the Courtyards. Courtyards provide an enjoyable space where the neighbors can enjoy one another in an outside atmosphere.

Just a few of the Houses with Courtyards

Houses are Mostly Brick per the Maison Bleu Covenants with Minimal Siding

Ridgelands Resident Yard of the Month with Courtyard

Cont’d with Courtyards

Houses are Brick per the Maison Bleu Covenants with Minimal Siding.

The latest builds may not have a Courtyard

Street Parties - Neighbors come to meet, rest and enjoy each other!

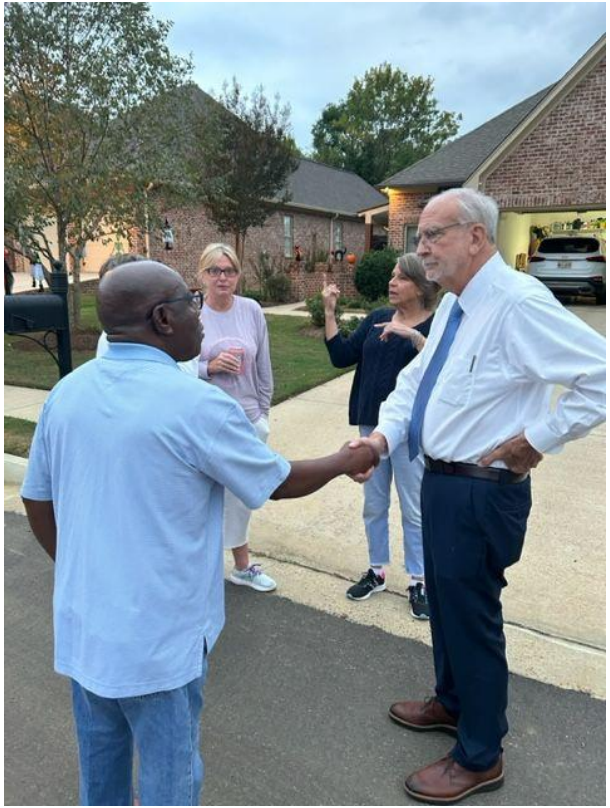

An Active Community Coming Together to Help Zone Ridgeland Right!

Maison Bleu Subdivision

A Distinctive Community With Restrictive Covenants Like Courtyards!
Come Sit and Enjoy Your Neighbors!

Courtyards provide a focal point where the neighbors come together and enjoy each others company.

Courtyards provide a focal point where the neighbors come together and enjo
each others company.

Ridgelands Resident Yard of the Month

Community street socials where neighbors come to rest and enjoy each other

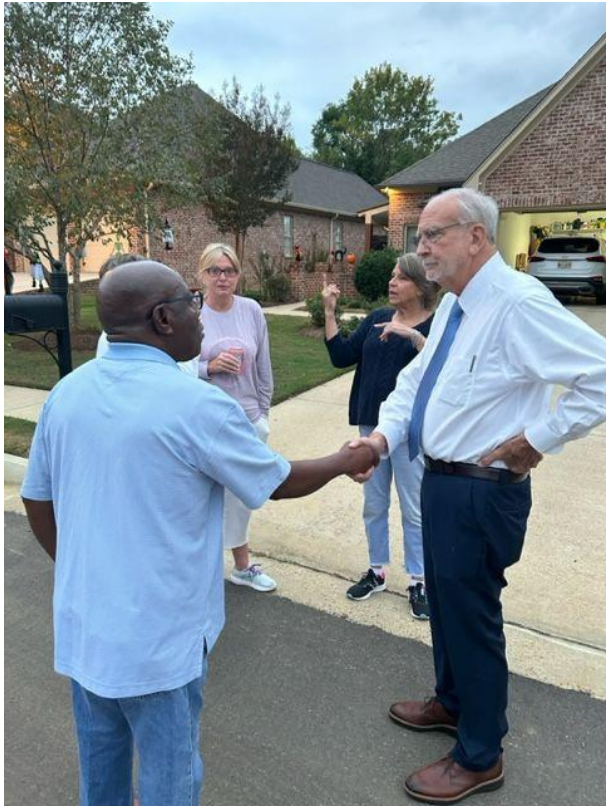

Let's Work Together to Zone Ridgeland Right!

Attachment D

MB II Developer's Agreement Nov. 2024

DEVELOPMENT AGREEMENT

(Maison Bleu Development)

This Development Agreement ("Agreement") is entered into as of the date last signed below ("Effective Date"), by and between **SCM Development, LLC, a Mississippi limited liability company** ("SCM"), **MBII Developers, LLC, a Mississippi limited liability company** ("MBII"), and **The City of Ridgeland, a Mississippi municipality** ("City").

WHEREAS, SCM is the developer of Maison Bleu Subdivision, Phase I ("Phase I"), which is depicted on the subdivision plat recorded in Plat Book F at Slide 14A of the Madison County land records ("Phase I Plat");

WHEREAS, SCM owns the land adjacent to the northern boundary line of Phase I and desires to sell such adjacent land to MBII;

WHEREAS, MBII desires to purchase such adjacent land from SCM for the purpose of developing Phase II of the Maison Bleu Subdivision ("Phase II") in material conformity with the draft preliminary plat attached hereto as **Exhibit "A"** ("Phase II Plat");

WHEREAS, all of the lots in Phase I have been sold to and are now occupied by residential owners, and SCM has completed all development work in Phase I;

WHEREAS, MBII intends to acquire the adjacent land and commence development work on Phase II;

WHEREAS, the City has made this Development Agreement a condition to approval of the preliminary plat and construction plans for Phase II ("Construction Plans");

WHEREAS, in order to coordinate the completion of Phase I and Phase II, to avoid repeating problems that were encountered during the development of Phase I, to avoid future disputes, to protect the property values of the residents of Maison Bleu, to protect MBII's future investment costs and efforts in developing Phase II, to generally benefit the residents of the developments and the citizens of the City, and to obtain the City's approval of Phase II, SCM and MBII hereby desire to provide assurances related to the development of Phase I and Phase II.

NOW THEREFORE, for and in consideration of the mutual benefits and the respective obligations contained herein, and other good and valuable consideration, the receipt and sufficiency of which are hereby acknowledged, the undersigned parties agree as follows:

1. **Completion of Phase I**. The City acknowledges and agrees that SCM has completed, to the satisfaction and approval of the City, the development work for Phase I that is specified in the letter dated May 19, 2023, titled "Maison Bleu" from the City's attorney and addressed to SCM, a copy of which is attached hereto as **Exhibit "B"**. For the avoidance of doubt, MBII shall have no liability, duty, or obligation whatsoever arising from or related to Phase I, including without limitation past or future development work on Phase I.

2. **Development of Phase II**. The development of Phase II shall comply with the following terms and conditions:

a. Phasing. Phase II is the second and final phase of Maison Bleu. MBII will develop Phase II at one time, not in multiple phases.

b. Mitigation of Construction Impacts.

i. Construction Access and Traffic Management. SCM, for the benefit of itself and its successors in title (including MBII), has obtained an Easement Agreement from Litchfield 588-B, LLC, the owner of the property lying between Maison Bleu and Century Place road, which provides a thirty (30) foot wide construction access easement northward from Phase II to Century Place road ("Construction Easement") and fifteen (15) foot wide utility easement for the installation of a water line northward from Phase II to the main water line located along Century Place ("Waterline Easement"). The Construction Easement and Waterline Easement are depicted on the attached Phase II Plat. All construction traffic related to the development of Phase II shall be limited solely to the Construction Easement. In order to protect the homeowners in Phase I, no Phase II construction traffic will travel through the existing Phase I area (including along Bleu Drive, Salvo Drive, or De Young Drive), and all construction traffic shall be limited to the hours of 7:00 am through 6:00 pm, Monday through Saturday, but with extended hours through 7:00pm during daylight savings time. MBII will construct a temporary barricade running east to west along the boundary line between Phase II and Phase I in order to prevent construction traffic and litter from traveling through Phase I.

ii. Litter and Erosion Control. MBII will monitor the Phase II construction site and area adjacent to the temporary barricade between Phase I and Phase II, and will promptly cleanup any construction litter that passes the barricade onto any part of Phase I. MBII will implement erosion control measures to prevent any erosion sediment from depositing onto of any Phase I property or any other adjacent property. Upon completion of the development construction and prior to recording of the final Plat of Phase II, MBII will place wattles at all curb inlets to prevent silt from entering storm drain inlets. During the home building phase, any homebuilders will monitor and clean the streets as needed, will implement erosion control measures such as silt fencing in order to prevent mud from entering the streets, and will be responsible for pickup and haul away of any construction debris and litter.

c. Secondary Water Line. As required by the City of Ridgeland, the fifteen (15) foot wide Waterline Easement has been obtained in the area depicted on **Exhibit "A"** to allow for installation of a secondary water line running northward from Phase II to the existing main waterline located along Century Place. The Waterline Easement connects to an additional utility easement located between Lots 24 and 25 of Phase II as shown on the Phase II Plat.

d. Retaining Wall and Drainage.

i. Retaining Wall. MBII will build a retaining wall running north-south along the rear boundary lines of Lots 13 through 24 of Phase II. Exact retaining wall plans will be determined during construction and stamped engineering plans for the wall will be provided to the City of Ridgeland at that time. The design and construction of the retaining wall will include a drainage system designed to capture and properly direct the drainage of water flowing from the adjacent properties to the east. This drainage system will include at least five (5) catch basins which drain into drain pipes located in the private drainage easements (described below). Water captured in the wall's catch basins will be directed to flow into the private drainage easements and from there will flow into the master storm drainage system and ultimately into the Private Detention Area shown on the Phase I Plat. The covenants for Phase II will require the subject Lot owners to maintain the retaining wall as needed to maintain proper functioning of the wall and the drainage systems incorporated into the wall.

ii. Private Drainage Easements. All Lots located east of DeYoung Drive or north of Bleu Drive will be subject to five (5) foot wide private drainage easements centered on the boundary lines between each Lot (with two and a half (2 ½) feet of such easement located on each Lot) as shown on the Phase II Plat. In addition, all Lots along the eastern boundary line of Phase II are subject to a fifteen (15) foot wide private drainage easement running along the rear boundary lines of such Lots as shown on the Phase II Plat. The covenants for Phase II will require the subject Lot owners to maintain the private drainage easements as needed to maintain proper drainage of stormwater and groundwater and will direct that the responsibility and cost of maintenance of the private drainage easements shall be borne by the subject Lot owners.

e. Setbacks. The Phase II Covenants and Phase II Plat will provide that the setbacks for all lots will be as follows: front - fifteen (15) feet; side – five (5) feet; and, rear – ten (10) feet, except that Lots 13 through 24 (all lots along the eastern boundary line of Phase II) will be subject to a fifteen (15) foot rear setback to facilitate the drainage plan.

f. Utility Easements. All required utility easements will be shown on the Phase II Plat prior to the City's approval of the final Plat. The utility easement previously located between Lots 53 and 54 has been moved to the common area north of Lot 53 as shown on the updated Phase II Plat. Ownership of all easements will be clearly specified on the final Plat. The City's approval of the final plat shall be deemed the City's acceptance of the sewer, water, and other utility easements and improvements dedicated to the City.

g. Final Surfacing of Streets. MBII will install the final wearing surface of the roads in Phase II at such time as dwellings have been constructed on eighty percent (80%) of the Phase II Lots. Notwithstanding the foregoing, MBII reserves the right to request that the installation of the final wearing surface be delayed for certain reasons, and the City reserves the right to approve or disapprove of such request. The City will accept dedication of the roads as public roads if MBII builds the roads in conformity with the approved construction plans and applicable City ordinances. MBII will warrant the roads for one (1) year against material defects caused by defective workmanship or defective materials.

h. Lighting. MBII will install street lighting in Phase II in a manner reasonably consistent with the street lighting in Phase I and in accordance with a final lighting plan to be shown on Entergy's electrical layout plan, which will be submitted to the City of Ridgeland before installation. Upon approval of the final Plat of the Development and after MBII completes the transfer process with Entergy's billing department, the City will assume responsibility for paying for usage of the street lighting.

i. Phase II Covenants.

i. Annexation; Supplemental Covenants. Subject to the terms and conditions of this Agreement and the Phase II Supplemental Covenants, Phase II will be annexed into the Maison Bleu development. Phase II will be governed by the existing Maison Bleu covenants, except as modified by the proposed Phase II Supplemental Covenants, a draft of which is attached hereto as **Exhibit "C"**. The final recorded version of the Phase II Supplemental Covenants will be materially consistent with the terms and conditions of this Agreement. (The existing covenants and Phase II Supplemental Covenants are referred to herein as the "Phase II Covenants").

ii. Trees. The Phase II Covenants shall require all Lots in Phase II to contain a minimum of two (2) trees, each having a minimum caliper of two (2) inches in diameter, either through the preservation of existing trees of the planting of new trees prior to the issuance of a Certificate of Occupancy.

iii. Design and Architectural Standards. Any homebuilder's design and construction of any dwelling shall comply with all applicable building codes and ordinances of the City and, as provided for in Article Six of the Covenants, is further subject to the design guidelines set forth in the Covenants and review and approval by the Architectural Review Committee of the homeowner's association. Before or after the City's approval of the final Plat, any homebuilder who intends to build dwellings in Phase II may submit its an architectural pattern book showing its conceptual elevation drawings and general home design scheme to the City for review and preliminary approval, in such form and substance as desired by the City. If the City (through its Mayor and Board of Aldermen) gives approval of such builder's architectural pattern book as recorded in the minutes of a board meeting of the Mayor and Board of Alderman, then the City shall not thereafter have the right to disapprove such builder's construction permit application for homes in the Phase II so long as the homebuilder's plans submitted with the permit application comply with the approved architectural pattern book, the design guidelines set forth in the Covenants, and all applicable ordinances relating to the issuance of a building permit. The City reserves the right to approve any deviations from the pattern book.

iv. Rental Terms. As required by the City, the Covenants will include verbatim the leasing restrictions set forth in Section 4 of the attached Phase II Supplemental Covenants.

3. **Coordination of Phase I and Phase II**. SCM and MBII agree to the following terms and conditions applicable to the coordination of Phase I and Phase II:

a. Declarant's Rights and Obligations. SCM shall maintain the declarant's rights and obligations with respect to Phase I. Upon MBII's acquisition of the Phase II land from SCM, SCM shall assign and MBII shall assume the declarant's rights and obligations with respect to Phase II.

b. HOA. The existing Maison Bleu Homeowners Association, Inc. ("HOA") shall serve as the homeowner's association for both Phase I and Phase II, subject however to the terms and conditions of this Agreement and the Phase II Supplemental Covenants. The governance of the HOA shall be in accordance with the Bylaws of Maison Bleu Homeowners Association, Inc. executed by SCM on April 26, 2024. With respect to Phase I, SCM shall cause the HOA to be turned over to the owners of Phase I Lots immediately following SCM's conveyance of the Phase II property to MBII. Notwithstanding anything to the contrary, the HOA and its Board of Directors shall have authority, rights, duties, and obligations for Phase I, and only for Phase I, of Maison Bleu (and not Phase II) until such time as MBII executes an assignment of declarant's rights assigning unto the HOA its declarant's rights and obligations with respect to Phase II. MBII, or its successors or assigns, shall execute such assignment upon the earlier of the following: a) thirty (30) days after a certificate of occupancy is issued for the last dwelling built in Phase II, or b) three (3) years after the effective date of the Phase II Covenants. Upon such assignment of declarant's rights and obligations with respect to Phase II, the HOA shall have the authority and responsibility for the governance of Phase II in accordance with the Covenants and Bylaws in the same manner as it does with respect to Phase I. For the avoidance of doubt, with respect to Phase II, the HOA shall have no authority over Phase II (including the authority to levy assessments) until it receives said assignment of declarant's rights and obligations for Phase II. Notwithstanding anything to the contrary, prior to the turnover of Phase II to the HOA: a) MBII or any builder shall pay the HOA a common area maintenance contribution fee of $100.00 per calendar year for each Phase II Lot owned by MBII or any such builder, and b) any subsequent owner of a Phase II Lot (i.e., an owner that is not a developer or builder) shall pay the HOA an annual common area maintenance contribution fee equal to the same amount as the annual maintenance assessment applicable to a Phase I Lot. Such common area maintenance contribution fees shall be due and payable on January 1 of each year beginning January 1, 2025. The HOA shall use such common area maintenance contribution fees for the maintenance, repair and upkeep of the common areas. After the turnover of Phase II to the HOA, the Phase II Lots shall be subject to the same assessments as Phase I Lots. The final Phase II Supplemental Covenants shall contain terms and conditions consistent with this Section. SCM and MBII will cooperate in good faith and will execute any documents reasonably necessary to effectuate the intent of this Section.

c. Detention Pond Maintenance. The Private Detention Area in Phase I was built by SCM during the development of Phase I and shall be common area of the Maison Bleu subdivision, serving both Phase I and Phase II. Title to the Private Detention Area, which includes the detention pond, was conveyed by SCM to the HOA by a Quitclaim Deed dated August 17, 2023, recorded in Book 4362, Page 168, in the office of the Chancery Clerk of Madison County, Mississippi. The HOA shall be responsible for maintaining the Private Detention Area in such manner to maintain drainage in accordance with the MDEQ approved Stormwater Pollution Prevention Plan. For the avoidance of doubt, MBII shall have no liability, duty, or obligation whatsoever arising from or related to the Detention Area (including the detention pond), including without limitation past or

future construction or maintenance of the Detention Area; provided, however, that MBII shall be responsible for repairing any damage to the Detention Area caused by MBII's development work on Phase II and shall implement control measures to prevent any debris and sediment generated by construction of Phase II from depositing into the Detention Area.

d. Walking Trail. No walking trail has been built in Phase I or Phase II. MBII does not intend to build any walking trail and shall have no liability, duty, or obligation whatsoever arising from or related to any walking trails (whether in Phase I or II), including without limitation past or future construction or maintenance of any walking trails.

e. Entrance and Other Phase I Common Areas. The HOA, at its sole cost and expense, shall maintain the neighborhood entrance feature at the intersection of Bleu Drive and Jackson Street and any other common areas in Phase I or Phase II. For the avoidance of doubt, MBII shall have no liability, duty, or obligation whatsoever arising from or related to any common areas in Phase I, except that MBII shall be responsible for repairing any damage that it causes to common areas in Phase I.

f. Mutual Indemnification.

i. Indemnity for Phase I. SCM shall indemnify, defend, and hold MBII (and its members, managers, employees, subcontractors, agents, and successors and assigns) harmless from and against any and all liabilities, claims, suits, judgments, damages, or losses arising from or related to the development of Phase I, including but not limited to any acts or omissions of SCM (or its members, managers, employees, subcontractors, agents, and successors and assigns) in connection with Phase I, the quality of the workmanship or materials used in Phase I, or any now existing or hereafter arising condition of, on or affecting Phase I (for example, drainage conditions and road quality conditions).

ii. Indemnity for Phase II. MBII shall indemnify, defend, and hold SCM (and its members, managers, employees, subcontractors, agents, and successors and assigns) harmless from and against any and all liabilities, claims, suits, judgments, damages, or losses arising from or related to the development of Phase II, including but not limited to any acts or omissions of MBII (or its members, managers, employees, subcontractors, agents, and successors and assigns) in connection with Phase II, the quality of the workmanship or materials used in Phase II, or any now existing or hereafter arising condition of, on or affecting Phase II (for example, drainage conditions and road quality conditions).

4. **Security and Warranty; Term.** In accordance with Articles 303.04 and 601 of the City's Subdivision Regulations, as a condition to the City's approval of the final Plat, MBII will (a) provide the City with a letter of credit in an amount equal to 1.5 times the estimated cost of the final wearing surface of the roads in Phase II and (b) execute the One Year Warranty in the form required by Article 601 of the Subdivision Regulations. The City must be notified in writing at least sixty (60) days prior to the release of the line of credit. MBII must renew the letter of credit as long as needed to comply with this Agreement and will provide the City with a copy of any such

renewals. The letter of credit will be cancelled and released upon the expiration of the One Year Warranty. The One Year Warranty shall commence upon the City's approval of the final Plat. MBII's obligations under this Agreement shall expire automatically at such time as the One Year Warranty expires. In addition to any other remedies available to the City, if MBII defaults on the performance of its obligations under this Agreement or the One Year Warranty, then the City shall notify MBII in writing of such default, which notice shall identify such default in reasonable detail and provide documentation thereof and state that the City intends to draw on the letter of credit. MBII shall have thirty (30) days after receipt of such notice to cure such default. If MBII fails to cure the default within such time period, then the City may draw on the letter of credit in an amount equal to the cost incurred to cure such default.

5. **General Terms**.

a. Entire Agreement. This Agreement and the exhibits attached hereto contain the entire agreement between the parties, and no written or oral promise, representation, warranty or covenant not included in this Agreement or any such referenced agreements has been or is relied upon by either party.

b. Counterparts. This Agreement shall be executed in any number of counterparts which together shall constitute the agreement of the parties.

c. Successors. This Agreement and the terms and provisions hereof shall inure to the benefit and be binding upon the parties hereto and their respective heirs, executors, personal representatives, successors and assigns whenever the context so requires or permits, including any future owners of any part of the subject property who own with the intent to develop such property into a residential development.

d. Severability. If any provisions of this Agreement are held to be illegal, invalid or unenforceable under present or future laws, such provisions shall be fully severable, and this Agreement shall be construed and enforced as if such illegal, invalid or unenforceable provision had never comprised a part of this Agreement.

e. Default and Remedies. In addition to the City's remedy of drawing on the Letter of Credit under Section 4, in the event a party defaults on the performance of its obligations under this Agreement and fails to cure such default within thirty (30) days after receiving written notice of such default from the other party, then the other party may seek to enforce this Agreement by suit for specific performance.

f. Waiver. Any waiver by a party hereto of any breach of this Agreement of any kind or character whatsoever by the other party, whether such waiver is direct or implied, shall not be construed as a continuing waiver or consent to any subsequent breach of this Agreement on the part of the other party.

g. Authority. The undersigned individuals represent and warrant that they have been duly authorized to sign on behalf of the entity parties to this Agreement.

h. Term. If MBII does not acquire and undertake the development of Phase II, then this Agreement shall be null and void. This Agreement shall expire automatically at such time as the One Year Warranty expires.

IN WITNESS WHEREOF, the parties hereto have duly executed this Agreement as of the Effective Date.

[Signatures appear on the following pages]

MBII Developers, LLC
a Mississippi limited liability company

By:_____ Date: _____

Name: _____

Title: _____

STATE OF _____
COUNTY OF _____

Personally appeared before me, the undersigned authority in and for the said county and state, on this _____ day of _____, 2024, within my jurisdiction, the within named _____, who proved to me on the basis of satisfactory evidence to be the person(s) whose name(s) is/are subscribed in the above and foregoing instrument and acknowledged that he/she/they executed the same in his/her/their representative capacity(ies), and that by his/her/their signature(s) on the instrument, and as the act and deed of the person(s) or entity(ies) upon behalf of which he/she/they acted, executed the above and foregoing instrument, after first having been duly authorized so to do.

_____
Notary Public
Printed Name: _____

My commission expires: _____

(Affix official seal, if applicable)

(*Signature page to Development Agreement – Maison Bleu*)

SCM Development, LLC
a Mississippi limited liability company

By:_____ Date: _____

Name: _____

Title: _____

STATE OF _____
COUNTY OF _____

Personally appeared before me, the undersigned authority in and for the said county and state, on this _____ day of _____, 2024, within my jurisdiction, the within named _____, who proved to me on the basis of satisfactory evidence to be the person(s) whose name(s) is/are subscribed in the above and foregoing instrument and acknowledged that he/she/they executed the same in his/her/their representative capacity(ies), and that by his/her/their signature(s) on the instrument, and as the act and deed of the person(s) or entity(ies) upon behalf of which he/she/they acted, executed the above and foregoing instrument, after first having been duly authorized so to do.

_____
Notary Public
Printed Name: _____

My commission expires: _____

(Affix official seal, if applicable)

(*Signature page to Development Agreement – Maison Bleu*)

The City of Ridgeland

By:_____ Date: _____

Name: _____

Title: _____

STATE OF _____
COUNTY OF _____

Personally appeared before me, the undersigned authority in and for the said county and state, on this _____ day of _____, 2024, within my jurisdiction, the within named _____, who proved to me on the basis of satisfactory evidence to be the person(s) whose name(s) is/are subscribed in the above and foregoing instrument and acknowledged that he/she/they executed the same in his/her/their representative capacity(ies), and that by his/her/their signature(s) on the instrument, and as the act and deed of the person(s) or entity(ies) upon behalf of which he/she/they acted, executed the above and foregoing instrument, after first having been duly authorized so to do.

_____
Notary Public
Printed Name: _____

My commission expires: _____

(Affix official seal, if applicable)

(*Signature page to Development Agreement – Maison Bleu*)

EXHIBIT A
PHASE II PLAT

(ATTACHED)

EXHIBIT B
LETTER DATED MAY 19, 2023
FROM CITY ATTORNEY TO SCM

(ATTACHED)

EXHIBIT C
PHASE II SUPPLEMENTAL COVENANTS

(ATTACHED)

Attachment E

MB II Supplemental Declaration of Covenants Conditions and Restrictions

Prepared by and return to:
Matthew T. Vitart, Esq. (MSB# 103552)
Reeves, Gentry & Vitart, PLLC
409 W. Parkway Place, Ste. 200
Ridgeland, MS 39157
(601) 898-4420

Declarant:
SCM Development, LLC
109 Rosedowne Drive
Madison, MS 39110
(____) _____-_____

Indexing Instructions:
Lots 1 and 4, Block 18
Highland Colony Subdivision, and
Maison Bleu Phase II, and
SE1/4 of SE1/4 of S.19, T.7N, R.2E
City of Ridgeland
Madison County, Mississippi

Marginal Notation:
Book 3170, Page 1

SUPPLEMENTAL DECLARATION OF COVENANTS, CONDITIONS AND RESTRICTIONS

FOR

MAISON BLEU, PHASE II

Supplemental Declaration of Covenants, Conditions and Restrictions
For
Maison Bleu, Phase II

This Supplemental Declaration of Covenants, Conditions and Restrictions for Maison Bleu, Phase II ("Supplemental Declaration") is made effective as of _____, 2024, by SCM Development, LLC, a Mississippi limited liability company ("Declarant").

WHEREAS, the Declarant is the developer of the Maison Bleu Subdivision;

WHEREAS, the Declarant previously developed Maison Bleu, Phase I (referred to herein as "Phase I"), as shown on that plat of subdivision recorded in Plat Cabinet F at Slide 14A in the Office of the Chancery Clerk of Madison County, Mississippi. In connection with Phase I, the Declarant adopted that certain Declaration of Covenants, Conditions and Restrictions for Maison Bleu, Phase I recorded in Book 3170 at Page 1 in the Office of the Chancery Clerk of Madison County, Mississippi ("Original Declaration");

WHEREAS, the Declarant owns certain land adjacent to Phase I, which is particularly described on **Exhibit "A"** attached hereto and incorporated herein by reference ("Phase II Property");

WHEREAS, in order for the Phase II Property to be developed into Maison Bleu, Phase II (referred to herein as "Phase II"), Declarant, pursuant to Article II of the Original Declaration, hereby intends to annex and subject the Phase II Property to the provisions of the Original Declaration, subject however, to certain modifications, amendments, additions, and supplementations as specified herein.

NOW, THEREFORE, the Declarant declares as follows:

Section 1. Annexation. Pursuant to Article II of the Original Declaration, Declarant hereby annexes and subjects the Phase II Property (being Maison Bleu, Phase II) to the provisions of the Original Declaration, subject however, to certain modifications, amendments, additions, and supplementations as specified herein. Except as modified herein, the Original Declaration shall remain in full force and effect. The Phase II Property is and shall be owned, leased, held, transferred, assigned, sold, conveyed, used, occupied, hypothecated, encumbered, and improved subject to the provisions of both the Original Declaration and this Supplemental Declaration which: (i) are agreed and declared to be beneficial for and in aid of the development of the residential community and the improvement of the Phase II Property; (ii) shall be deemed appurtenant to the Phase II Property and shall run with and bind the Phase II Property; and, (iii) shall inure to the benefit of and be enforceable by the Declarant, its successors and assigns, and each Person who has or acquires any interest in any portion of the Property or the improvements on the Property, including the Association, any Owner and any Person who holds such interest solely as security for the performance of an obligation or the payment of a debt. To the extent of any conflict between the terms of the Original Declaration and

the terms of this Supplemental Declaration, the terms of this Supplemental Declaration shall control. Any capitalized terms used but not defined in this Supplemental Declaration shall have the meaning ascribed to them in the Original Declaration.

Section 2. Association's Powers and Duties for Phase II. Notwithstanding anything to the contrary herein, in the Declaration, the Bylaws, or otherwise, the powers, authorities, and duties of the Association, Board of Directors, and Architectural Review Committee with respect to Phase II shall be subject to the terms and conditions stated in this Section. The Declarant has reserved and retains all declarant's rights, powers, and privileges with respect to Phase II. The Association, Board of Directors, and Architectural Review Committee shall have powers, authorities, and duties for Phase I, and only for Phase I, (and not for Phase II) until such time as the Declarant (or its successor pursuant to Section 14.07 of the Declaration) executes an assignment of declarant's rights assigning unto the Association the Declarant's rights, powers, and privileges with respect to Phase II. The Declarant shall execute such assignment upon the earlier of the following: a) within thirty (30) days after a certificate of occupancy is issued for the last Dwelling built in Phase II, or b) three (3) years after the effective date of this Supplemental Declaration~~; provided that failure to meet such deadline shall not prevent Declarant from making such assignment at a later date~~. Upon such assignment of declarant's rights with respect to Phase II, the Association, Board of Directors, and Architectural Review Committee shall have the powers, authorities, and duties for the governance, management, and maintenance of Phase II in accordance with the Covenants and Bylaws in the same manner and to the same extent as they do with respect to Phase I. For the avoidance of doubt, with respect to Phase II, the Association, Board of Directors, and Architectural Review Committee shall not have any powers, authorities, or duties whatsoever over or for Phase II (including the authority to levy assessments against any Lots in Phase II) until the Association receives from Declarant said assignment of declarant's rights and obligations for Phase II. However, prior to the turnover of Phase II to the Association: a) Declarant or any developer or builder shall pay the Association a common area maintenance contribution fee of $100.00 per calendar year for each Phase II Lot owned by the Declarant or any such developer or builder, and b) any subsequent owner of a Phase II Lot (i.e., an owner that is not a developer or builder) shall pay the Association an annual common area maintenance contribution fee equal to the same amount as the annual maintenance assessment applicable to a Phase I Lot. Such common area maintenance contribution fees shall be due and payable on January 1 of each year beginning January 1, 2025. The Association shall use such common area maintenance contribution fees for the maintenance, repair and upkeep of the common areas. After the turnover of Phase II to the Association, the Phase II Lots shall be subject to the same assessments as Phase I Lots.

Section 3. Architectural Standards. Attached as **Exhibit "B"** are required architectural features and finishes for Dwellings in Phase II. If a proposed construction plan for a Dwelling in Phase II substantially incorporates such features and finishes, then it shall be deemed consistent with the intended architectural plan for Phase II.

Section 4. Lease of Dwellings. Notwithstanding anything to the contrary, any leasing of Lots or Dwellings in Phase II shall be subject to the terms and conditions stated in this Section. Dwellings and Lots in Phase II may be leased by an Owner for residential purposes only; provided, however, that any such leasing activities shall be subject to the following terms and conditions: (a) any such lease and the rights of any tenants thereunder are hereby made expressly subject to the power of the Association to prescribe reasonable rules and regulations relating to the lease and rental of Lots and Dwellings and to enforce the same directly against such tenant or other occupant by the exercise of such remedies as the Board of Directors deems appropriate, including eviction; (b) no such lease shall be for less than twelve (12) months; (c) all leases must be in writing, with a copy provided to the Association upon request by the Association; (d) an Owner (or in the case of any Owner which is an entity, any affiliate of an Owner or other entity that has common ownership) may own only one leased Dwelling within the Subdivision at any given time; (e) a period of at least one (1) year has elapsed from and after the building permit for that particular Dwelling has been issued, or a period of at least six (6) months has elapsed from and after the final inspection by the appropriate public building inspector has occurred and the certificate of occupancy has been issued, whichever period of time is longer; and, (f) any Owner desiring to lease a Dwelling to a tenant shall have owned the Lot for a period of at least one (1) year prior to the commencement of such lease. Any Owner who leases his Dwelling or any portion thereof shall be responsible for the acts of his tenants, including, without limitation, the violation of this Declaration and/or any rules and regulations promulgated by the Association hereunder. Notwithstanding the foregoing, this Section shall not apply with respect to any Lot subject to a mortgage which is insured or guaranteed by the Federal Housing Administration or the Veterans Administration, or where the provisions of this Section are otherwise prohibited by law. In the event title to a Lot is transferred by foreclosure or deed-in-lieu of foreclosure, or if the mortgage for such Lot is assigned to the Secretary of the U.S. Department of Housing and Urban Development, then any requirements for or restrictions on conveyance included in this Declaration (including without limitation the leasing restrictions imposed by this Section 4) shall be deemed automatically terminated as to such Lot.

Section 5. Setbacks. Setbacks for all Phase II Lots will be as follows: front - fifteen (15) feet; side – five (5) feet; and, rear – ten (10) feet, except that Lots 13 through 24 (all Lots along the eastern boundary line of Phase II) will be subject to a fifteen (15) foot rear setback to facilitate the drainage plan.

Section 6. Trees. All Lots in Phase II shall contain a minimum of two (2) trees, each having a minimum caliper of two (2) inches in diameter, either through the preservation of existing trees or the planting of new trees prior to the issuance of a Certificate of Occupancy. The Builder shall be responsible for compliance with this provision.

Section 7. Private Drainage Easements.

(a) All Lots in Phase II located east of DeYoung Drive or north of Bleu Drive are hereby subject to five (5) foot wide private drainage easements centered on the boundary lines between each Lot (with two and a half (2 ½) feet of such easement located on each Lot) as shown on the Plat of Phase II. The Owners of such Lots shall maintain the private drainage easements as needed to maintain proper drainage of stormwater and groundwater. The responsibility and cost of maintenance of the private drainage easements shall be borne in equal one-half shares by each subject Lot owner.

(b) All Lots along the eastern boundary line of Phase II are hereby subject to fifteen (15) foot wide private drainage easement running along the rear boundary lines of such Lots as shown on the Plat of Phase II. The Owner of each subject Lot shall be solely responsible for maintaining and repairing the portion of the private drainage easement located on their respective Lot as needed to maintain proper drainage of stormwater and groundwater.

(c) A retaining wall, which includes a drainage system incorporated into its design, runs north-south along the rear boundary lines of all Lots along the eastern boundary line of Phase II for the purpose of facilitating proper drainage and preventing erosion and collapse. The wall is located within the fifteen (15) food wide private drainage easement described in the prior subsection. The Owner of each subject Lot shall be solely responsible for maintaining and repairing the portion of the retaining wall located on their respective Lot as needed to maintain proper functioning of the wall and the drainage systems incorporated into the wall.

Section 8. Square Footage. Notwithstanding anything to the contrary, each Dwelling constructed on the Property (being the Lots of Maison Bleu, Phase II) shall have the following square footage: exclusive of porches and garages, the heated and/or cooled living area of each Dwelling, main house or residential structure constructed shall contain at least one thousand eight hundred (1,800) square feet.

(*Remainder of page left blank. Signature page follows.*)

IN WITNESS WHEREOF, the Declarant has executed this Supplemental Declaration of Covenants, Conditions and Restrictions for Maison Bleu, Phase II effective as of _____, 2024.

DECLARANT

SCM Development, LLC,
a Mississippi limited liability company

By: _____
Matt Herfurth, Member and Manager

STATE OF MISSISSIPPI
COUNTY OF _____

Personally appeared before me, the undersigned authority in and for the said county and state, on this _____ day of _____, 2024, within my jurisdiction, the within named Matt Herfurth, who proved to me on the basis of satisfactory evidence to be the person whose name is subscribed in the above and foregoing instrument and acknowledged that he executed the same in his representative capacity, and that by his signature on the instrument, and as the act and deed of the person or entity upon behalf of which he acted, executed the above and foregoing instrument, after first having been duly authorized so to do.

_____
Notary Public
Printed Name: _____

My commission expires: _____ (SEAL)

JOINDER OF ASSOCIATION

Maison Bleu Homeowners Association, Inc., a Mississippi non-profit corporation, whose mailing address is _____, hereby approves and joins in thIS Supplemental Declaration of Covenants, Conditions and Restrictions for Maison Bleu, Phase II and agrees to be bound by the terms thereof and will comply with and perform the terms and conditions thereof.

In Witness Whereof, Maison Bleu Homeowners Association, Inc. has executed this Joinder on this _____ day of _____, 2024.

Maison Bleu Homeowners Association, Inc.,
A Mississippi non-profit corporation

By: _____

Name: _____

It: _____

STATE OF MISSISSIPPI
COUNTY OF _____

Personally appeared before me, the undersigned authority in and for the said county and state, on this _____ day of _____, 2024, within my jurisdiction, the within named _____, who proved to me on the basis of satisfactory evidence to be the person whose name is subscribed in the above and foregoing instrument and acknowledged that he executed the same in his representative capacity, and that by his signature on the instrument, and as the act and deed of the person or entity upon behalf of which he acted, executed the above and foregoing instrument, after first having been duly authorized so to do.

_____
Notary Public
Printed Name: _____

My commission expires: _____ (SEAL)

EXHIBIT A
LEGAL DESCRIPTION OF PHASE II PROPERTY

following described parcel of land containing 7.637 acres or 332687.07 sqft., more or less and being part of Lots 1 and 4 of Block 18, Highland Colony Subdivision, a subdivision according to the map or plat of which is on file in the Office of the Chancery Clerk, Madison County, Mississippi, said parcel is located in the Southeast Quarter of the Southeast Quarter of Section 19, Township 7 North, Range 2 East, City of Ridgeland, Madison County, Mississippi and being more particularly described as follows, to wit;

Commencing at a found concrete monument marking the Northeast corner of the Southeast Quarter of Section 19, Township 7 North, Range 2 East, City of Ridgeland, Madison County, Mississippi; thence proceed South 00°18'48" East for a distance of 1,321.95 feet to a found concrete monument and The Point of Beginning of the following described parcel of land; thence S 00°19'29" E a distance of 693.15 feet to a found 1/2" rebar; thence S 89°40'33" W a distance of 100.00 feet to a found 1/2" rebar on the East Right-of-Way line of Bleu Drive, a paved public road as now laid out and in use this date (September 2023); thence leaving said East Right-of-Way line of Bleu Drive, run N 86°35'39" W a distance of 50.11 feet to a found 1/2" rebar on the West Right-of-Way line of said Bleu Drive; thence leaving said West Right-of-Way line of Bleu Drive, run S 89°40'31" W a distance of 200.00 feet to a found 1/2" rebar on the East Right-of-Way line of Deyoung Drive, a paved public road as now laid out and in use this date (September 2023); thence leaving said East Right-of-Way line of Deyoung Drive, run N 66°21'08" W a distance of 54.79 feet to a found 1/2" rebar on the West Right-of-Way line of said Deyoung Drive; thence leaving said West Right-of-Way line of Deyoung Drive, run N 89°48'31" W a distance of 100.00 feet to a found 1/2" rebar; thence N 00°19'28" W a distance of 564.10 feet to a found 1/2" rebar; thence N 90°00'00" E a distance of 84.81 feet to a found 1/2" rebar on said West Right-of-Way line of Deyoung Drive; thence continue along said West Right-of-Way line with a curve turning to the right with an arc length of 22.52 feet, a radius of 50.00 feet, a chord bearing of N 48°57'31" E, and a chord length of 22.33 feet to a found 1/2" rebar; thence leaving said West Right-of-Way line of Deyoung Drive, run N 00°01'03" E a distance of 90.92 feet to a found 1/2" rebar; thence S 89°58'57" E a distance of 397.79 feet back to The Point of Beginning of the above described parcel of land containing 7.637 acres or 332687.07 sqft., more or less.

EXHIBIT B
RECOMMENDED FEATURES AND FINISHES

EXTERIOR MATERIALS
Brick- exterior walls with Vinyl or Hardie board accents
Siding- Vinyl or Hardie Board – design per plans
Cornish-Vinyl or Hardie
Front Exterior Accents-as per plans
Front exterior door- Wood, Fiberglass with glass
Windows- Vinyl, Vinyl clad, metal clad, wood clad
Shutters- 1x6 Cedar – design per plans
Screen Porch - Treated pine or Cedar, Charcoal vinyl screen, NO ALUMINUM SCREEN.
ROOFING
Roof Pitch- 8/12 minimum
Shingles-Owens Corning Dimensional or equal. Gray, brown, black or blends. NO GREEN, BLUE, RED, TAN OR WHITE SHINGLES.

INTERIOR FINISHES
Ceiling plate height- 9' minimum
Vaults and Trays- As per plan
Interior trim mouldings
- Baseboard throughout home
- Crown moulding per plans
- Door trim - 356 minimum

Interior doors- Raised panel masonite
Countertops/Backsplashes-Granite, quartz, ceramic tile
Flooring- wood, engineered wood, vinyl wood, ceramic tile, carpet, stained concrete
Water Heaters-tankless or tank
Appliances – Gas, Electric or duel fuel

LANDSCAPING
Each home will be professionally landscaped
Each home will have a minimum of 4 shrubs for every 10' of foundation frontage.
Corner lots will have a minimum of 1 shrub for every 6' of foundation frontage facing the side street.
One (1) oak tree to be planted on each lot in front yard set back
All lots to be completely sodded

Attachment F

Maison Bleu Phase I

Filed Declaration of Covenants, Conditions and Restrictions

BOOK 3170 PAGE 1 DOC 14 TY W
INST # 751342 MADISON COUNTY MS.
This instrument was filed for
record 2/03/15 at 4:23:12 PM
RONNY LOTT, C.C. BY: CWH D.C.

Instrument prepared by:
SCM Development, LLC
109 Rosedowne Drive
Madison, Mississippi 39110
573.836.1620

Return to:
R. Paul Randall, Jr.
Mississippi Bar Roll No: 99960
RANDALL, SEGREST, WEEKS,
REEVES & SONES, PLLC
992 Northpark Drive, Suite A
Ridgeland, Mississippi 39157
601.956.2615
www.randallsegrest.com
Matter No.: 792-01

Indexing Instructions: 3200
Lots 1 and 4 of Block 18,
Highland Colony Subdivision,
Madison County, Mississippi.

Declarant/Grantor/Grantee:
SCM Development, LLC
109 Rosedowne Drive
Madison, Mississippi 39110
573.836.1620

69.00 @ #620

DECLARATION OF COVENANTS, CONDITIONS AND RESTRICTIONS FOR MAISON BLEU SUBDIVISION 4966 PHASE I

This Declaration of Covenants, Conditions and Restrictions for Maison Bleu Subdivision, Phase I (the "Declaration") is made January ____, 2015, by SCM Development, LLC, a Mississippi limited liability company (the "Declarant").

The Declarant is the owner of certain real property situated in Madison County, Mississippi, and described in **EXHIBIT A** hereto (the "Property"). The Property has been subdivided into 33 lots shown and depicted on a plat thereof, which plat will be filed in the Office of the Chancery Clerk of Madison County, Mississippi (the "Subdivision"). It is anticipated additional lands will be platted contiguous to the Subdivision with an additional 49 lots. The Declarant desires to create and develop a residential community on the Property which shall have designated common areas

38

(the "Common Area") for the benefit of the residential community. The Declarant desires to provide for the preservation of the values and amenities and the enhancement of the charm and beauty of the residential community, and for the designation, administration and maintenance of the Common Area. The Declarant desires to subject all the Property including any and all improvements constructed or to be constructed on the Property, to the covenants, conditions, restrictions, uses, limitations, obligations, easements, servitudes, charges, assessments and liens set forth in this Declaration which individually and collectively are for the benefit of the Property, each Owner, and the Declarant.

Declarant shall create and organize Maison Bleu Homeowners Association, Inc., a Mississippi non-profit corporation (the "Association"), and shall delegate and assign certain powers and duties created by and in this Declaration to the Association (i) for the administration and maintenance of the Common Areas, (ii) for the administration and enforcement of the provisions of the Declarations, and (iii) for the determination, collection and disbursement of charges and assessments hereinafter specified.

Capitalized terms used herein shall have the meanings defined herein.

NOW, THEREFORE, the Declarant declares that the Property is and shall be owned, leased, held, transferred, assigned, sold, conveyed, rented, used, occupied, hypothecated, encumbered and improved subject to the provisions of the Declaration which (i) are agreed and declared to be beneficial for and in aid of the development of the residential community and the improvement of the Property, (ii) shall be deemed to run with and bind the Property, and (iii) shall inure to the benefit of and be enforceable by the Declarant, its successors and assigns, and each Person who has or acquires any interest in any portion of the Property or the improvements on the Property, including the Association, any Owner and any Person who holds such interest solely as security for the performance of an obligation or the payment of debt.

ARTICLE I

DEFINITIONS

Section 1.01. Definitions. For all purposes of this Declaration, the following words and terms have the meanings assigned in this Section 1.01 unless otherwise specified or the context requires a different construction:

a. "Additional Property" shall mean any real property which from time to the Declarant may add to the Property as permitted by Section 2.03.

b. "Articles" shall mean the Articles of Incorporation of the Association, as amended from time to time.

c. "Assessment" shall mean the share allocated to a Lot of the Association's (i) Annual Assessments under Section 5.02, (ii) Special Assessments under Section 5.03, and (iii) expenses,

costs, charges and other amounts incurred with respect to either such Lot or the satisfaction, discharge or compliances with any obligations or duties of the Owner of such Lot as specified in this Declaration.

d. "Association" shall mean the Maison Bleu Homeowners Association, Inc., a Mississippi nonprofit corporation, and its successors and assigns.

e. "Board of Directors" shall mean the Board of Directors of the Association.

f. "Builders" shall mean any Person who is in the business of constructing a Dwelling on a Lot for resale and not for personal use.

g. "Bylaws" shall mean the bylaws of the Association, as amended from time to time.

h. "Common Area" shall mean all real property shown and designated on the Plat as a Common Area which is owned or otherwise made available to the Association for the common use, benefit and enjoyment of the Members, including but not limited to, all retention/detention ponds located thereon. The Common Area shall be all of the Property except (i) all platted and numbered Lots as shown and designated on a Plat, (ii) any portion of the Property shown and designated on a Plat as reserved or designated for future development as a part of an addition to the residential community, (iii) the Streets, and (iv) easements as shown and designated on a Plat for utilities and all water and sewer lines located in such easements or within Streets

i. "Declarant" shall mean SCM Development, LLC, a Mississippi limited liability company, and its successors and assigns. The designation of any successor to or assignee of the Declarant may be made by a written instrument making such designation or assignment and filed of record in the land records of Madison County, Mississippi.

j. "Declaration" shall mean this Declaration of Covenants, Conditions and Restrictions for the Subdivision, as amended or supplemented from time to time.

k. "Dwelling" shall mean any building or portion of a building located on the Property which is designed and intended for use and occupancy as a residence by a single individual or by a family, including a detached house, a town house or a garden house.

l. "First Mortgage" shall mean a mortgage, deed of trust or similar encumbrance creating a lien or encumbrance against a Lot which has priority over all other mortgages, deeds of trusts or similar encumbrances against such Lot.

m. "Invitees" shall mean an Owner's guests, patrons, employees or other guests or invitees.

n. "Lot" shall mean each subdivided parcel, plot or tract of land constituting a portion of the Property which is shown and designated as a numbered lot on the Plat and is intended to be improved with a Dwelling, but not include the Common Area.

o. "Management Agent" shall mean the Person, if any, employed or retained by the Board of Directors for the purpose of conducting and managing the daily operations of the Association.

p. "Member" shall mean each Person who holds or has any class of membership in the Association as provided by Article III.

q. "Mortgagee" shall mean any Person who owns, holds or is the beneficiary of a mortgage, deed of trust or similar encumbrance creating a lien or encumbrance against any Lot and the improvements on such Lot.

r. "Neighborhood" shall mean a particular area of platted lots which are designated as a particular Neighborhood or part thereof by such designation on a plat or in a Supplementary Declaration.

s. "Owner" shall mean the record holder, whether one or more Persons, of a fee or undivided fee interest in or to a Lot, excluding a contractor, a Builder, and those Persons who hold an interest in a Lot merely as security for the performance of an obligation or payment of a debt. Each owner shall be either a Class A Member or a Class B Member of the Association.

t. "Perimeter" shall mean the outside boundary of the Property as depicted on the Plat.

u. "Person" shall mean an individual, a corporation, a general or limited partnership, an association, a trust, an estate, a limited liability company, or any other legal entity.

v. "Plans" shall mean the plans, blueprints, drawings, specifications and samples prepared by or for an Owner or Builder in connection with the development or improvement of a Lot.

w. "Plat" shall mean the subdivision map or plat of the Subdivision, or any area therein, which has been or shall be filed for record in the office of the Chancery Clerk of Madison County, Mississippi. The Plat may be amended or supplemented, and includes any additional subdivision map or plat filed for record when if all or any portion of the Additional Property is annexed to the Property pursuant to Article II.

x. "Property" shall mean (i) all real property situated in Madison County, Mississippi, which is described in **EXHIBIT A**, and (ii) any portion of the Additional Property which is added to the Property by annexation pursuant to Article II.

y. "Streets" shall mean the streets, roads, parking areas, curbs and sidewalks which have been dedicated to and accepted for maintenance and repair by the City of Ridgeland, Mississippi, or such other governmental authority which may have, obtain or acquire the jurisdiction or obligation for such maintenance and repair. Streets shall also mean any street which the Declarant conveys to the Association as a private street which is not dedicated to any governmental authority. Notwithstanding the designation of sidewalks as part of the streets, each Owner may be required to construct a sidewalk on his lot, subject to the specifications established by the Architectural Review Committee.

z. "Supplement Declaration", "Supplementary Declaration" or "Supplement" shall mean any supplement amendment, modification, change or restatement of or to this Declaration.

ARTICLE II

PROPERTY SUBJECT TO DECLARATION

Section 2.02. The Property. The real property which is and shall be owned, leased, held, transferred, assigned, sold, conveyed, rented, used, occupied, hypothecated, encumbered, and improved subject to this Declaration is the Property which is described in **EXHIBIT A**.

Section 2.02. Common Area. All of the real property which is set aside us, and declared to constitute the Common Area, after such real property is conveyed to the Association by the Declarant, shall be held and owned for the common use, benefit and enjoyment of the Members. The Declarant may at any time convey additional portions of the Property to the Association and declare such portion to be Common Area. The designation of any portion of the Property as a Common Area shall not mean that the public at large acquires any easement of use, benefit and enjoyment in or to the Common Area. The Common Area shall be conveyed to the Association by the Declarant prior to, concurrent with or after the sale of the last Lot owned by the Declarant. The Association shall be responsible for maintenance or the Common Area.

Section 2.03. Annexation of Additional Property. Notwithstanding anything contained herein to the contrary, the Declarant expressly reserves the option, right and privilege (i) to annex any real property to the Property, and (ii) by or as a result of such annexation to subject the annexed Additional Property to the provisions of this Declaration. The provisions of this Declaration shall not affect or apply to any portion of the Additional Property unless and until such portion of the Additional Property is annexed to the Property pursuant to the provisions of Section 2.07. Such Additional Property may be designated as Maison Bleu Subdivision, Phase 2, Phase 3 and so on.

Section 2.04. No Obligation to Annex. The Declarant shall not have the obligation, but only the option, right and privilege, to develop or annex property as Additional Property. The Declarant expressly does not represent, warrant or guarantee to any Person that any property will be developed or will be annexed to the Property. By acceptance of a deed conveying any interest, purchasing or otherwise acquiring such interest in the Lot, the Owner has not relied on any proposed, current or future development of any property as Additional Property or annexation of proposed, current or future development of any property as Additional Property or annexation of any property as Additional Property to the Property.

Section 2.05. Annexation Procedure. To annex Additional Property to the Property as permitted by Section 2.03, the Declarant shall execute and file for record a Supplement which describes the property being annexed as Additional Property to the Property and a new, amended or revised description of the Property. The option, right and privilege of the Declarant to annex any real property as Additional Property to the Property is subject to the following provisions:

a. The Declarant may annex any property as Additional Property at different times and in any sequence desired by the Declarant without regard to whether or not the portion of the Additional Property being annexed is contiguous to the Property.

b. The Supplement shall extend the provisions and scheme of this Declaration to the Additional Property being annexed. The Supplement may contain such complimentary additions to and modifications of the provisions of this Declaration the Declarant determines to be appropriate or necessary for the different character or use, if any, of the Additional Property being annexed. Such additions and modifications shall not be generally or substantially inconsistent with the provisions of this Declaration, except as permitted by Section 2.07.

Section 2.06. Effect of Annexation. Upon a Supplement referred to in Section 2.05 being filed for record, the Additional Property described in the Supplement shall be annexed to the Property. Any and all Lots, and the Common Area of or in the annexed Additional Property shall be subject to the provisions and scheme of this Declaration and the jurisdiction, functions, duties, obligations and memberships of the Association, including the Articles, the Bylaws and any rules and regulations promulgated or adopted by the Board of directors.

Section 2.07. Supplementary Declarations. As and when the Declarant begins the construction and marketing of an area within any Additional Property which is to be platted into Lots, the Declarant may file a Plat and a Supplementary Declaration for such area and the Lots contained therein and described on such Plat. The Supplementary Declarations may contain such additions or modifications to this Declaration as the Declarant determines appropriate for the character and use of such area, including, but not limited to the establishment of setback restrictions; size and style requirements for Dwellings; sidewalk, fence, and mailbox requirements or restrictions and maintenance and security requirements. No approval of any other party shall be necessary for the Declarant to file any such Supplementary Declaration.

ARTICLE III

ASSOCIATIONS MEMBERSHIP AND VOTING RIGHTS

Section 3.01. Organization of the Association. The Declarant shall organize the Association by filing Articles of Incorporation with the Secretary of State of Mississippi. The Association shall be responsible for the administration and maintenance of the Common Areas and the enforcement of the provisions of this Declaration as they relate to the Association.

Section 3.02. Membership. The Members of the Association shall be the Declarant and every Person who is, or who hereafter becomes, an Owner of record of the fee title to a Lot, and who is included in the definition of an Owner under Article I of this Declaration. When more than one Person owns or holds an interest in a Dwelling, all such Persons shall be Members, subject to the limitations on voting rights set forth herein.

Section 3.03. Class of Members. The Association shall have two (2) classes of Members:

Class A. The Class Members of the Association shall be all Members other than Persons herein defined as the "Declarant", who are or who hereafter become the Owner of the Lot.

Class B. The Class B Members of the Association shall be each of the Persons herein Defined as the "Declarant". Upon the sale or other disposition of all of the Property, either as Lots, Common Area or for private uses; or upon the Declarant's abandonment of the development of the Property, the Class B Membership shall terminate.

Section 3.04. Members' Voting Rights. Except as otherwise specifically provided in the Articles of Incorporation or the Bylaws, the voting rights of the Members shall be as follows:

a. Class A Members. Each Class A Member shall be entitled to one (1) vote for each Lot in which such Member holds the interest required for membership. When more than one Person holds such interest or interests in any Lot, all such Persons shall be Members, and the vote for such Lots shall be exercised as they, among themselves, determine but in no event shall more than one vote be cast with respect to any such Lot.

b. Class B Members. Each Class B Members shall be entitled to one (1) vote for each Lot in which such Member holds the interest required for membership. If a Class B Member owns any part of the Property which has not been platted as Lots, such Class B Member shall retain one (1) vote for such part of the Property.

Section 3.05 Action by Members. Wherever any provisions of the Declaration or Bylaws requires a vote for a specified percentage of the voting power of each class of Members, such provision shall require a separate vote by the specified percentage of the voting power of the Class A Members and by the specified percentage of the voting power of the Class B Members. Whenever any provisions of the Declaration requires a vote of a specified percentage of the voting power of the Members, such provision shall require a vote by the specified percentage of the combined voting power of all Members.

Section 3.06. Membership Appurtenant to Real Property. The membership of the Class A Members shall be appurtenant to the ownership of a Dwelling constructed on a Lot. The membership of the Class B Members shall be appurtenant to the ownership of a Lot. A membership shall not be held, assigned, transferred, pledged, hypothecated, encumbered, conveyed or alienated in any manner except in conjunction with and as an appurtenance to the ownership, assignment, transfer, pledge, hypothecation, encumbrance, conveyance or alienation of the Lot to which the membership is appurtenant.

Section 3.07. Voting Conflict Between Members. If the fee title to a particular Lot is owned of record by more than one Member, the one vote appurtenant to such Lot may be exercised by any one of such Members, unless the other Members who own an interest in such Lot shall object prior to the completion of voting upon the particular matter under consideration. In the event of any such objection, the one vote appurtenant to such Lot shall not be counted, unless the Members unanimously agree on the vote prior to completion of voting upon the particular matter under consideration.

Section 3.08. Other Voting Provisions. The Articles and/or the Bylaws may contain other provisions relating to voting rights of Members with respect to matters or issues unrelated to the Declaration, including, but not limited to, the election of individuals to the Board of Directors or as Officers.

Section 3.09. Other Provisions. The Articles and/or the Bylaws may contain other provisions relating to the operation of the Association so long as such provisions do not conflict with the Declaration.

ARTICLE IV

BOARD OF DIRECTORS AND OFFICERS OF HOMEOWNERS ASSOCIATION AND MANAGEMENT AGENT

Section 4.01. Board of Directors. The affairs of the Association shall be managed and controlled by the Board of Directors of Maison Bleu Homeowners Association, Inc. ("Board of Directors") which shall have all of the power and authority necessary or appropriate for such management and control. The initial Board of Directors shall consist of the two (2) individuals designated in the Articles or appointed by the Incorporators. After the first meeting of the Members, the Board of Directors shall consist of the number of individuals as may be prescribed in the Bylaws from time to time. Directors need not be Members. The Directors shall be elected or appointed by the Members in the manner prescribed in the Bylaws, except that so long as the Class B Membership exists, the Class B Member shall be entitled to appoint the number of Directors which is one more than one-half of the Directors to be elected or appointed.

Section 4.02. Powers and Duties. In the management and administration of the Association's affairs, the Board of Directors shall have power, authority, and duty to do all acts and actions, except acts and actions which by law, this Declaration, the Articles or the Bylaws may be exercised only by or are reserved only to the Members. Such powers, authorities, and duties of the Board of Directors to create, establish or approve policies or decisions relating to the management and administration of the Association's affairs include, but shall not be limited to, the following:

a. To provide for the maintenance, care, upkeep, surveillance, services and efficient operation of the Common Area.

b. To establish, determine, assess, collect, use and expend the Assessments from the Members and to file and enforce liens for such Assessments.

c. To select, designate, train, hire, supervise and discharge personnel necessary or appropriate for the proper maintenance, care, upkeep, surveillance, services and efficient operations and maintenance of the Common Area, and to establish the compensation and other benefits of or for such personnel.

d. To adopt, promulgate and enforce such rules, regulations, restrictions and requirements as may be recommended by the Architectural Review Committee pursuant to Article X hereof or the Management Agent pursuant to Section 4.04 hereof, or as the Board of Directors may consider to

be appropriate with respect to the Property, the Lots, and any improvements on the Lots, including Dwellings, or the use, occupancy and maintenance of the Common Area, including but not limited to, rules, regulations, restrictions, and requirements designed to prevent unreasonable interference with the use, benefit and enjoyment of the Common Area by the Members and other authorized Persons, or to govern activities which may be environmentally dangerous or hazardous, including the use or application of fertilizers, pesticides and other chemicals in or on the Property.

e. To authorize the payment of patronage refunds to the Members if and when the Board of Directors determines that the funds derived from Assessments are more than sufficient to satisfy all reasonably foreseeable financial needs or requirements of the Associations during the current fiscal year, including funds for reserves.

f. To purchase any insurance deemed appropriate to protect the Members, officers and directors including, but not limited to liability insurance for the Board of Directors and its officers.

g. To maintain, repair, restore, reconstruct, or demolish all or any portion of the Common Area after any casualty loss, and to otherwise improve the Common Area.

h. To lease or grant licenses, easements, rights-of-way and other rights of use in or options, sell, assign, exchange, trade, quitclaim, surrender, release, abandon, mortgage or encumber or otherwise convey all or any portion of the Common Area upon such terms, conditions and provisions as the Board of Directors consider to be advisable, appropriate, convenient or advantageous for or to the Association, subject to any requirements or limitations therein.

i. To lease as tenant, purchase or otherwise acquire Lots and to option, lease, sell, assign, exchange, trade, transfer, quitclaim, surrender, release, abandon, mortgage, encumber or otherwise convey any of such Lots upon such terms, conditions and provisions as the Board of Directors considers to be advisable, appropriate, convenient or advantageous for or to the Association.

j. To retain or employ a Management Agent for such compensation and for the performance of such duties and services as established or prescribed by the Board of Directors from time to time.

k. To negotiate, prepare, execute, acknowledge and deliver all contract, agreements commitments and other documents relating to the Association's affairs.

l. To prosecute, defend, appeal, settle, compromise or submit to arbitration any suit action, claim or proceeding at law or in equity or with or before any governmental agency or authority which involves or affects the Association, including the Common Area.

m. To retain or employ and pay the fees, expenses or other compensation of accountants, attorneys, architects, contractors, engineers, consultants or other Persons who may be helpful, necessary, appropriate or convenient in or to the Association's affairs, whether or not related to or affiliated with any director or officer of the Association or any Member or the Declarant.

n. Subject to Section 9.01 (c), to borrow any funds required for the Association's affairs from any Person on such terms, conditions and provisions as may be acceptable to the Board of Directors, and to secure the repayment of any such loans by executing deeds of trust or by pledging or otherwise encumbering or subjecting to security interests all or any portion of the assets of the Associations, including the Common Area.

o. To establish rules, regulations, restrictions, requirements and fees and charges from time to time relating to the use of the recreational areas and amenities now or hereinafter located in or on the Common Area.

p. To accept title to any property, either alone or with covenants, as a Common Area, or as property owned by the Association for such purposes and on such terms as the Board of Directors may approve.

q. To act to enforce the provisions of this Declaration and any Supplement or Amendment hereof; however, the Board of Directors shall determine whether or not any action or omission by any party is subject to the covenants and what, if any, actions the Association shall take.

r. To establish Special Assessments pursuant to Section 5.03(d) for violating or breaches these Covenants by any Owner and to stablish procedures for determination of violations and to give violators the opportunity to cure such violations.

Section 4.03. Officers. The Association shall have such officers as are prescribed by the Bylaws and shall choose such officers in the manner prescribed by the Bylaws. The officers shall conduct affairs of the Association and implement the policies and decisions of the Board of Directors.

Section 4.04 Management Agent. The Board of Directors may retain or employ a Management Agent at a rate of compensation established by the Board of Directors to perform such duties and services as the Board of Directors from time to time may authorize. The Management Agent shall perform such duties and services as the Board of Directors shall direct and authorize and which may include, without being limited to, the following power and authority:

a. To establish and collect the Annual Assessments and Special Assessments, and enforce liens to secure the collection of such Assessments.

b. To provide for the maintenance, care, upkeep, surveillance, services and efficient operation of the Common Area.

c. To select, designate, train, hire, supervise and discharge personnel necessary or appropriate for the proper maintenance, care, upkeep, surveillance, services and efficient operation of the Common Area.

d. To enforce and to recommend that the Board of Directors approve and enforce such rules, regulations, restrictions, and requirement relating to maintenance, care, upkeep, surveillance, services and operations of the Common Area.

e. To provide such services for the Association as may be requested by the Board of Directors, including legal and accounting services.

Any management agreement entered into by the Association and any Management Agent shall permit termination for cause by the Association upon thirty (30) days' written notice to the Management Agent. The term of any such management agreement shall not exceed one (1) year, but may be renewable by mutual agreement for successive one-year terms.

Section 4.05. Limitation of Liability. Neither the Declarant, its agents, officers, partners, members, managers, or employees, nor the Association, the Board of Directors, any Director nor any Officer of the Association shall be liable to any Person for any failure of or failure to provide any service to be furnished by the Association or to be paid with funds from charges, fees or Assessments, or for any death, injury or damage to any Person or property caused by the elements or caused by or resulting from electricity, gas, or water which may discharge or flow from any portion of the Common Area, or from any wire, pipe, drain, conduit or similar property. Neither the Declarant, its agents, officers, partners, members, managers, or employees, nor the Association, the Board of Directors, nor any officer of the Association shall be liable to any Person for theft or other loss of or damage to any property which may be left or stored in the Common Area, common facilities, any Lot or street. No diminution or abatement of Annual Assessments or Special Assessments shall be claimed or allowed for the inability to use, any inconvenience or discomfort caused by or arising or resulting from the need for or the conduct of routine or other maintenance or repairs, or the construction or reconstruction of improvements on the Common Area or common facilities, or from any action taken or omitted or from inaction by the Association to comply with any of the provisions of this Declaration, any Supplement, any law or ordinance or the order or directive of any governmental authority or any court.

ARTICLE V

COVENANTS FOR ASSESSMENTS

Section 5.01. Assessments. Each Owner, by acceptance of a deed or other conveyance document for a Lot, whether or not expressed in any such deed or other conveyance document, shall be deemed to covenant and agree to pay to the Association the Assessments for such Lot which shall be such Lot's proportionate share of the amount estimated by the Board of Directors to be required for the purposes contained in Section 5.02 or Section 5.03, or otherwise considered to be an Assessment under this Declaration. Except as provided herein, there shall be no distinction between the Assessments with regard to whether or not a Dwelling has been constructed.

Section 5.02. Annual Assessments. The Board of Directors shall establish the initial Annual Assessment as its first meeting. Thereafter, the Board of Directors shall determine the amount of the Annual Assessments with respect to each Lot annually or at such more frequent intervals as the Board of Directors considers appropriate. The Annual Assessment for each fiscal year may be paid in installments during such fiscal year, either quarterly, semiannually or annually as the Board of Directors shall determine. The due date for each installment payment of the Assessment shall be the first day of the applicable installment period. Any Assessment installment may be prepaid without penalty or premium.

The Board of Directors shall prepare, or cause to be prepared, an annual operating and capital expenditure budget for the Association, including the Common Area. The Board of Directors shall make reasonable efforts to determine and to calculate the amount of the Annual Assessment against each Lot for each fiscal year at least thirty (30) days prior to the start of such fiscal year. Within a reasonable time after determining the Annual Assessment, notice thereof shall be given to the Members. The Association shall prepare and maintain at the Association's office a schedule of the Annual Assessment for the Lots and the schedule shall be available for inspection by any Member at any reasonable time during the Association's normal business hours. The omission or failure by the Board of Directors to determine or calculate the amount of the Annual Assessment applicable to the next fiscal year shall not constitute a waiver or modification of any provision of this Article V, and shall not constitute a release of any Member from the obligation to pay the Annual Assessment against the Member's Lot, or to pay any installment of such Assessment for the next or any subsequent fiscal year. The Annual Assessment for the prior fiscal year shall continue to be the Annual Assessment payable by the Members until a new Annual Assessment is determined or calculated by the Board of Directors. Subject to the limitations in Section 5.09, the Board may change the Annual Assessment at any time during the year. No Class A Member may become exempt from or otherwise avoid liability for the payment of the Annual Assessment by the abandonment of any Lot or by the abandonment or release of the Member' rights to the use, benefit and enjoyment of the Common Area.

Except as permitted by Section 5.04, the Annual Assessments levied by the Association shall be used (i) to promote the health, safety and welfare of the residents of the Property, including the improvement maintenance and repair of the Common Area and, and (ii) to pay the costs of labor, the purchase or rental of equipment and materials used or required for, and the management, care and supervision or the Common Area. The purposes for which the Annual Assessments may be levied include, but are not limited to, the following purposes:

a. The amount of all operating and maintenance expenses of or for the Common Area and the services furnished or provided to or in connection with the Common Area, including charges for any services furnished or provided by the Association.

b. The costs of appropriate or necessary management and administration of the Common Area, including fees or other compensation paid to a Management Agent.

c. The amount of all taxes and assessments levied against the Common Area.

d. The costs of fire and extended coverage and liability insurance on the Common Area and the Association's other assets and the costs of such other insurance with respect to the Common Area and the association's other assets and affairs as the Board of Directors considers appropriate.

e. The costs of garbage and trash collection to the extent provided by the Association, and utilities and other services which may be provided by or for the Association for o to the Common Area and/or the Lots.

f. The costs to maintain, replace, repair and landscape the Common Area including but not limited to, the costs (i) to maintain, replace and repair the sidewalks, streets, roads and parking areas, and (ii) of such equipment as the Board of Directors shall determine to be necessary or appropriate in connection with such maintenance, replacement, repair and landscaping.

g. The costs to fund all reserves established by the Association, including any appropriate general operating reserve and/or reserve for replacement of the Common Area.

Section 5.03 Special Assessments. In addition to the Annual Assessments authorized in Section 5.02, the Association may levy Special Assessments as follows:

a. In any fiscal year the Association may levy a Special Assessment applicable only to that fiscal year (i) for the purpose of paying all or a portion of the costs of any construction, reconstruction, replacement or inordinate repair or maintenance of improvements on the Common Area, including any fixtures and personal property on or related to the Common Area, or (ii) for such other purposes as the Board of Directors may consider to be appropriate. Any such Special Assessment shall be approved by a vote of two-thirds (2/3rds) of each class of the Members. As used herein, inordinate repair or maintenance shall mean such repair or maintenance which is not necessary on an annual basis, but rather is necessary on an irregular or as needed basis, or which arise because of a casualty or catastrophe.

b. The Association may levy a Special Assessment against any Lot and the Owner of any Lot for reimbursement (i) of or for repairs occasioned by the willful or negligent acts of the Owner of such Lot or his Invitees, or (ii) of or for any and all costs, expenses and expenditures made or incurred by the Association with respect to such Lot for work or activities performed on such Lot, for the discharge or satisfaction of any obligation or duty imposed upon such Owner under this Declaration, or for costs incurred in enforcing the covenants set forth in the Declaration.

c. The Association may levy a Special Assessment against each Lot containing a Dwelling for an amount equal to the charge made by any government authority for backup fire protection pursuant to any current or future agreement, as amended form time to time, by and between the Association and such governmental authority.

d. The Association may levy a Special Assessment against any Lot and the Owner of any Lot who fails or refuses to comply with any covenant in this Declaration or any Supplement or who has breached or defaulted under any covenant and has failed or refused to cease or cure such breach or default. The Board of Directors shall establish rules for the imposition of any such Special Assessments, the enforcement of such Special Assessments, and actions to be taken upon any Person's refusal to pay Special Assessments.

e. The Association may levy a Special Assessment against each Lot for reimbursement to the Association for any attorney's fees, court costs, or other costs of enforcement of any provisions of this Declaration upon approval of two-thirds (2/3rds) of each class of the Members.

Section 5.04. Dwelling and Lawn Maintenance. This Declaration does not contemplate that the Association shall have any responsibility for the maintenance or repair of any Dwelling or its

appurtenances or for the maintenance and care of lawn, garden, and landscaped areas on any Lot. The Association shall have the responsibility and duty only for the maintenance, repair and care of the Common Area. However, the Association may provide the exterior maintenance and repair of any Dwelling and any appurtenance and/or the maintenance and care of lawn, garden and landscaped areas of certain Lots pursuant to (i) a determination by the Board of Directors either on its own recommendation or initiative or the recommendation or request of the Owner of the Lot, or (ii) the provisions of a Supplementary Declaration which provides that the Association shall perform such maintenance, repair and care in or on a specified portion of the Property. The costs of such maintenance, repair and care shall be included in the Annual Assessment of such Lot. In no event shall the Association maintain and care for lawn, garden and landscaped areas in or on any enclosed portion of any Lot which is intended for use only by the occupants of the Dwelling on such Lot.

Section 5.05. Reserves for Replacements. The Association shall establish and maintain a reserve fund for replacements within the Common Area and shall allocate and pay such amount to the reserve fund from time to time as may be designated by the Board of Directors. Amounts paid to the reserve fund shall be included in the Annual Assessment under Section 5.02. All amounts paid into the reserve fund shall be deposited in such bank accounts or accounts in federally insured banks or in such investment accounts or investment assets as shall be designated by the Board of Directors from time to time. The reserve fund for replacements of the Common Area may be expended only (i) for the repair and replacement of the Common Area, (ii) for repairs to any sidewalks, streets, roads or parking areas located on the Common Area, (iii) for equipment replacement, or (iv) for non-recurring start-up expenses and operating contingencies of the Common Area. The Association may establish other reserve funds for the purposes considered necessary or appropriate by the Board of Directors from time to time.

Section 5.06. Reserve Fund Appurtenant to the Lot. The proportional interest of each Class A Member in any reserve funds shall be considered to be an appurtenance to the Lot of such Member, and shall not be withdrawn, assigned or transferred separately from or other than as an appurtenance to the Lot to which the proportional interest in the reserve funds appertain. Any transfer or assignment of the Lot shall be deemed to be a transfer or assignment of the proportional interest in the reserve funds. No Member shall be entitled to a refund of his proportionate share of such reserve funds.

Section 5.07. Initial Annual Assessments. As and when new Lots are platted, applicable Annual Assessments for such Lots shall be the same as for existing Lots unless the Board of Directors determines otherwise. The Annual Assessments shall apply as and when each such Lot is sold as provided herein.

Section 5.08. Commencement of Assessments. Each Class A Members who acquires a Lot shall be liable to pay installments of the Annual Assessment with respect to such Lot beginning on the first day of the next month following the date a deed or other conveyance document to the Lot is delivered to the Class A Member, as grantee. If any Owner sells his Lot, such Owner shall still be liable for the amount of the Assessment for the month in which the sale is made. Upon the sale or transfer of a Lot, the Annual Assessment shall be adjusted according to the number of months remaining in the fiscal year.

Section 5.09. Changes in Annual Assessments. The Board of Directors may change the Annual Assessments for each Lot at any time: however, any increase in the Annual Assessment may be not more than ten percent (10%) above the immediately prior fiscal year's Annual Assessment without a vote of two-thirds (2/3rds) of each class of the Members voting on such matter.

Section 5.10. Assessments are not Dues. No portion of any Annual Assessments or Special Assessments provided in or permitted by this Section 5 are intended to be, or shall be construed to be, dues for membership in the Association.

Section 5.11. Costs and Expenses of Certain Damage. If the Board of Directors determines that any Owner (i) has failed or refused to properly satisfy or discharge any maintenance, repair, care, upkeep, replacement or any other obligations or duties for which the Owner is responsible under this Declaration, or (ii) is responsible for damage to the area of the common responsibility which is not covered by insurance, the Board of Directors may provide such maintenance, repair, care, upkeep or replacement or satisfy or discharge any such other obligations or duties at the Owner's sole cost and expense. Prior to doing so, the Board of Directors shall notify the Owner that he has ten (10) days from the date of such notice to satisfy or discharge such obligation or duty. Such costs and expenses shall be increased by all amounts specified in Section 6.03. All such amounts shall be considered to be a Special Assessment against the Lot and the Owner of such Lot shall be personally responsible and liable for the payment of all such amounts immediately upon notice form the Association. All such amounts shall become a lien against such Lot which shall be enforceable by the Association.

Section 5.12. Meetings to Approve Assessments. If the consent or approval of any class of the Members is required for any action hereunder, the Board of Directors shall call a meeting of the Members pursuant to the Bylaws for the purpose of considering the consent or approval for such action.

Section 5.13. Uniform Rate for Assessments. Except (i) as provided in Sections 5.07 or 5.11, (ii) for Special Assessments pursuant to Section 5.03, (iii) to the extent that the Annual Assessment or Special Assessments for particular Class A Members may be increased under Section 5.04, all Annual and Special Assessments shall be levied at a uniform rate for each Lot to which Class A membership is appurtenant. The Board of Directors may change the pro-rata obligation of any Lot or of the Owner of such Lot for the purposes of levying Annual Assessments or Special Assessments, except Special Assessments pursuant to Section 5.03(b) and 5.03(d), only if approved by at least two-thirds (2/3rds) of each class of the Members.

Section 5.14. Notices. The Association may send notices to Members advising each Member of the status of his Annual Assessments and Special Assessments. Failure of the Association to send notices of assessments or any notice of non-payment or delinquency will not prevent a will not prevent a Member from being subject to any provision of this Declaration or the Bylaws which provides for removal of such Member as an Officer or Director or prohibits such Members from being elected as an Officer or Director.

Section 5.15. Assessments of Declarant or Builders. Any Lot owned by any Builder shall not be subject to Assessments by the Association until the first day of the first month beginning more than sixty (60) days after completion of construction of any Dwelling on such Lot, or, if sooner, the first day of the seventh month after the date or other conveyance document to such Lot is delivered to the Builder, as grantee. Any Annual Assessment or Special Assessment upon any Lot owned by a Builder pursuant to Section 5.03 (a), or Section 5.03 (e) shall be twenty-five percent (25%) of the Assessment against each similar Lot not owned by a Builder. The Declarant shall not be subject to Assessments by the Association.

Section 5.16. Exempt Property. No Assessment of any kind or nature shall be levied by the Association against (i) any portion of the Streets and other real property and improvements dedicated and accepted by the local public authority and devoted to public use, (ii) all areas unplatted or reserved for future development by Declaration or a Plat of the Property, (iii) the Common Area.

ARTICLE VI
ENFORCEMENT OF ASSESSMENTS

Section 6.01. Lien of Assessments. All assessments with respect to or against a Lot plus such additional amounts as are specified in Section 6.03 shall be (i) a charge on the land, (ii) a continuing lien upon and against the Lot, (iii) binding upon such Lot and (iv) the continuing joint and several personal obligation and liability of each Person who was an Owner of such Lot when any portion of such Assessment became due and payable, and the heirs, devisees, personal representatives, successors and assigns of each such Owner, which shall not be extinguished or diminished by any transfer or conveyance or any Lot.

The personal obligation of each Member to pay all Assessments levied against the Member's Lot shall continue for the full statutory period permitted by law. A suit to recover a monetary judgment for non-payment of all or any portion of each Assessment, including any installment, may be commenced and maintained by the Association without the foreclosure or waiver of any lien created under the Declaration to secure the payment of such Assessment. Any judgment may include all amounts specified in Section 6.03. The Association may commence and maintain an action at law against any Member personally obligated or liable to pay any Assessment and/or may foreclose the lien against any Lot in the manner now or hereafter provided in the State of Mississippi for foreclosure of mortgages and other liens on real property containing a power of sale provision. Any such foreclosure by the Association shall be subject to the substantive and procedural requirements prescribed by the laws of the State of Mississippi applicable to the foreclosure of mortgages and other liens on real property containing the power of sale provision, The Association may buy such Lot at any such foreclosure.

The Association shall have the right to accept or reject partial payment of an Assessment and to demand the full payment of such Assessment; however, acceptance of any partial payment shall not relieve the Member of the obligation to pay the balance of the Assessment. The lien for unpaid Assessments shall be unaffected by any sale or other transfer of the Lot subject to the Assessments, and the lien shall continue in full force and affect. No Member may waive or otherwise avoid or escape personal liability for payment of any Assessment by abandonment of the Member's Lot or

by abandonment or release of the Member's rights to the use, benefit and enjoyment of the Common Area.

If any proceeding to foreclose the lien for any unpaid portion of an Assessment is commenced by the Association with respect to any Lot, the Board of Directors may require the Owner of the Lot to pay reasonable rent for use of the Lot, and the Association shall be entitled to the appointment of a receiver to collect such rent.

The Board of Directors may post or publish in any prominent location on the Property a list of Members who are delinquent in the payment of any portion of an Assessment or other fees which may be due to the Association, including any installment of an Assessment.

Section 6.02. Assessment Certificate. Upon receipt of a written request, the Board of Directors or the Management Agent, within five (5) business days, shall furnish to any Member liable for the payment of any Assessment, or to any other Person having legitimate interest in the payment of such Assessment, a certificate signed by an Association officer or the Management Agent stating whether or not the Assessment has been paid. The certificate shall be conclusive evidence of the payment of any Assessment stated to have been paid in the certificate. The Board of Directors may require the payment of a reasonable charge for the issuance of a certificate.

Section 6.03. Amount of Lien. Upon the default in the payment of any installment of an Assessment, the entire unpaid balance of all Assessment shall immediately be and become due and payable, unless the Board of Directors shall otherwise direct. In addition to the amount of the unpaid Annual Assessments or Special Assessments, the following amounts shall be considered to be Special Assessments against the Lot and the Owner of such Lot and shall be subject to the lien of Assessments provided under Section 6.01:

a. All reasonable coast and expenses of collection of Assessments including attorney's fees, court costs and other costs and expenses relating to the collection of Assessments or enforcement of the lien of Assessments, whether or not suit is filed.

b. Such late payment charges or fees as shall be established by the Board of Directors from time to time.

c. Such Association overhead charges as shall be established by the Board of Directors from time to time which reimburse the Association for overhead or indirect costs and expenses incurred to collect unpaid Assessments or to perform or satisfy any obligation or duty imposed upon such Owner under this Declaration or any Supplement.

d. Interest on or with respect to all amounts specified in this Section 6.03, including the unpaid balance of all Assessments. Such interest shall accrue from the due date until paid in full at the maximum rate of interest permitted by law in the State of Mississippi on a loan from a financial institution to an Owner which is secured by his personal residence.

Section 6.04. Priority of Lien. The lien to secure payment of an Assessment against a Lot shall have preference over any other liens, assessments, judgments or charges of whatever nature, except

(i) general and special assessments for ad valorem property taxes on or against such Lot, (ii) the lien of any First Mortgage on such Lot made in good faith and for value received and duly recorded prior to the Assessment creating the lien against the Lot or duly recorded after receipt of a certificate under Section 6.02 stating that payment of the Assessment was current as of the date the First Mortgage was filed of record.

Section 6.05. Subordination to Mortgages. As provided by Section 6.04, the lien against any Lot to secure payment of any Assessment shall be subordinate to the lien of any duly recorded First Mortgage on or against the Lot made in good faith, and for value received, and shall not affect the rights of the holder of any First Mortgage. However, the lien shall be subordinate only with respect to Assessments which have become due and payable prior to the sale or transfer of the Lot pursuant to a foreclosure of any such First Mortgage, or prior to the execution of any deed, assignment or proceeding of arrangement in lieu of foreclosure. Any such holder of a First Mortgage who acquires possession of such Lot pursuant to a foreclosure or pursuant to the execution of any deed, assignment or other proceeding or arrangement in lieu of foreclosure, and any purchaser or assignee at a foreclosure sale or any transferee under any deed, assignment or other proceeding or arrangement in lieu of foreclosure, shall acquire the Lot free of any claims for unpaid Assessments levied against the Lot which accrued prior to the time such holder acquires the Lot, or prior to the foreclosure sale or prior to the execution of any deed, assignment or other proceeding or arrangement in lieu of foreclosure, except for claims for a proportionate share of such unpaid Assessments resulting from a reallocation of such unpaid Assessments among the various Lots. However, such foreclosure, deed assignments or other proceeding or arrangement in lieu of foreclosure shall not relieve the holder of the First Mortgage or the purchaser or assignee at foreclosure or the transferee under any deed, assignment or other proceeding or arrangement in lieu of foreclosure from any liability for payment of any Assessments thereafter becoming due, or from the lien created to secure the payment of any such Assessments, and the lien for the payment of such Assessments thereafter becoming due and payable shall have the same effect and shall be enforced in the same manner as provided in this Paragraph 6.

No amendment to this Section 6.05 shall adversely affect the rights of the holder of any First Mortgage on any Lots, or the holder of any indebtedness secured by such First Mortgage, filed for record to the amendment being filed for record, unless such holders execute, this Section 6.05 to mortgagees not otherwise entitled to the benefits of this section 6.05.

In its sole and absolute discretion, the Board of Directors may extend the provisions of this Section 6.05 to mortgagees not otherwise entitled to the benefits of this Section 6.05.

Section 6.06. Additional Default. Any First Mortgage encumbering a Lot shall provide that any default by the mortgagor in the payment of any Assessment or any installment of an Assessment shall be a default under the First Mortgage. The failure to include such a provision in any First Mortgage shall not affect the validity or priority of the First Mortgage, and the protection extended by Section 6.05 to the holder of the First Mortgage or to the holder of the indebtedness secured by the First Mortgage shall not be altered, modified or diminished by reason of or as a result of any such failure.

Section 6.07. Filing of Notice of Delinquency. If any Owner becomes more than sixty (60) days delinquent in paying any Annual Assessment or Special Assessment, the Association may file a Notice of Delinquency in the land records of Madison County, Mississippi, referencing such Owner and the Lot to which such delinquency applies. As and when any such assessments have been paid, the Notice shall be canceled.

ARTICLE VII

INSURANCE

Section 7.01. Association's Insurance. The Association shall apply for, obtain, pay the costs or premiums of and maintain insurance in such limits and forms and from such companies as the Board of Directors shall consider appropriate and as required by the Bylaws of the Association. All costs, charges and premiums for all insurance authorized by the Board of Directors shall be included in the Annual Assessments.

Section 7.02. Owner's Insurance. Each Owner shall insure his Dwelling, the other improvements on his Lot, and the furnishings and personal property in or on such Dwelling to the extent and in the manner provided in the Bylaws of the Association.

ARTICLE VIII

AD VALOREM TAXES

Section 8.01. Owner. Each Owner shall be responsible for the payment of and shall promptly pay all ad valorem taxes assessed on or against his Lot and improvements on his Lot.

Section 8.02 Association. The Association shall pay the ad valorem taxes assessed on or against the Common Area and the Association's other assets.

ARTICLE IX

PROPERTY RIGHTS

Section 9.01. Members' Easements of Enjoyment. Every Member shall have a right and easement of enjoyment in and to the Common Area which shall be appurtenant to and shall pass with the title to every Lot, subject to the following provisions:

a. The Association may suspend any Member's voting rights and any Member's rights to use the Common Area for any period during which any Assessment remains unpaid and for any period not exceeding sixty (60) days for any infraction, breach or violation of any rules and regulations of the Association. The rights of the Members to use the Streets may not be suspended by the Association for any reason whatsoever.

b. The Association may dedicate or transfer all or any part of the Common Area to any governmental agency or authority or any utility for such purposes and subject to such conditions

as may be determined by the Members. No such dedication or transfer shall be effective unless Members representing at least two-thirds (2/3rds) of the voting power of each class of Members approve or consent to such dedication, transfer, purpose and conditions and an instrument agreeing or consenting to such dedication or transfer executed by Members representing at least two-thirds (2/3rds) of the voting power of each class of Members has been filed for record.

c. In accordance with the Articles and the Bylaws, the Association may borrow money to repair, maintain or improve all or any portion of the Common Area in a manner designed to promote the enjoyment and welfare of the Members. In connection with any such loan, the Association may subject all or any portion of the Common Area to the liens of deeds of trust or other security interests. The Association shall not borrow money or subject all or any portion of the Common Area to the lien of deed of trust or other security interest unless approved by Members representing at least two-thirds (2/3rds) of the voting power of each class of Members.

d. The Association may take any action permitted by this Declaration as is reasonably appropriate or necessary to prevent a default of any of the Association's obligation or to protect the assets of the Association against or from foreclosure or enforcement of any security interest by a creditor.

e. The Association may adopt reasonable rules with respect to the use of the Common Area.

f. The Association may grant to any governmental agency or authority or to any utility or to the Declarant or to any other Persons such licenses, rights-of-way and easements for access or for the construction, reconstruction, maintenance and repair of the Property. No such license, right-of-way or easement shall be unreasonably and permanently inconsistent with the rights of the Members to the use, benefit and enjoyment of the Common Area.

g. The Association may open or permit the use of all or any portion of the Common Area to a wider group of Persons for such purposes and on such basis or conditions as the Board of Directors may from time to time consider appropriate.

h. The Members shall have to perpetual easements over and upon any of the streets, Common Area for such portions of their Dwellings that may overhang or otherwise encroach upon any of the Common Area for (i) support (ii) necessary repairs and maintenance, (iii) maintenance of reasonable appurtenances to the Dwellings, and (iv) reasonable ingress and egress to and from any Dwelling through and over the Common Area.

i. The Members shall have the right to use the streets, roadways, sidewalks and vehicular parking areas situated upon the Common Area, provided that each Member shall comply in all respects with all rules and regulations not inconsistent with the provisions of this Declaration which the Board of Directors may from time to time adopt or promulgate with respect to parking and traffic control upon the Common Area.

j. The Declarant may dedicate or grant to any governmental authority having jurisdiction over the Property, some or all of the streets roads, parking areas, sidewalks and/or right-of-way as shown and designated on the Plat. If such streets, roads, parking areas and right-of-way have not

been dedicated by the Declarant, then the Association may dedicate such streets, roads, parking areas, sidewalks and right-of-way to any governmental authority which will accept such dedication and agree to maintain or repair the streets, roads, parking areas, sidewalks and/or rights-of-way as public streets. Such dedication by the Association shall be done only upon the approval of at least two-thirds (2/3rds) of each class of Members.

k. The Association may temporarily restrict the use, benefit and enjoyment of certain portions of the Common Area in accordance with a prior reservation scheduled by the Management Agent or the Board of Directors.

Section 9.02. Rights Not Subject to Suspension. The Association shall have no authority to either temporarily or permanently suspend any of the rights specified in Section 9.01 (i) for any reason whatsoever.

Section 9.03. Delegation of Use. In accordance with the Bylaws and subject to such reasonable rules and regulations as the Board of Directors may adopt or promulgate and uniformly apply and enforce, any Member may delegate his rights to the use, benefit and enjoyment to the Common Area to (i) family members who reside permanently with him, (ii) contract purchasers who reside on the Property, and (iii) invitees.

ARTICLE X

ARCHITECTURAL REVIEW COMMITTEE

Section 10.01. Establishment of Maison Bleu Architectural Review Committee. There is hereby established an Architectural Review Committee, to be known as Maison Bleu Architectural Review Committee (referred to herein as "Architectural Review Committee"). The Architectural Review Committee shall be appointed by the Declarant as long as Declarant owns of record any Lot or any of the Property and shall have the number of Members designated by the Declarant. Thereafter, the Architectural Review Committee shall be appointed by the Board of Directors, and shall have the number of Members designated by the Board of Directors. The Declarant may, at its sole discretion, assign to the Board of Directors the right to appoint additional members of the Architectural Review Committee, any Members so appointed by the Board of Directors shall serve at the pleasure of the Board of Directors and may or may not be Members in the Association.

Section 10.02. Vote and Actions by Architectural Review Committee. The affirmative vote of a majority of the members of the Architectural Review Committee shall be required to make any finding, determination, ruling or order or to issue any permit, consent, approval or disapproval hereunder. Notwithstanding any approval by the Architectural Review Committee, if during construction the Architectural Review Committee determines that any action an Owner or Builder is or would be contrary to or in violation of the rules of the Architectural Review Committee or the Review Process, the Architectural Review Committee shall have the authority to order the Owner or Builder to cease, modify or correct such action so as to comply with the rules of the Architectural Review Committee or the Review Process.

Section 10.03. General Requirements. Except for the purposes of proper maintenance and repair, no improvement, including, but not limited to, buildings, fences, walls or other structures, and no exterior additions, change or alterations to any improvements, including any change or alteration of color, shall be commenced, erected, constructed, placed, altered, moved, maintained or permitted to remain on any portion of the Property, including any Lot, until after compliance with the review process established by the Architectural Review Committee and approval of the Plans by the Architectural Review Committee ("Review Process"). Any Builder, including any Owner of a Lot, who remodels or alters existing improvements on any Lot shall be required to submit to the Review Process. The Association may establish guidelines for maintenance and repairs which are subject to the Review Process because of the nature, scope or cost of such maintenance or repairs.

Section 10.04. Review Process. The Architectural Review Committee shall, from time to time, establish rules and guidelines for the Review Process. Such rules and guidelines may include, but not be limited to, requirements concerning:

a. The number, type, style, size, location and form of buildings, drainage areas, site plans, landscape plans, setbacks, and other plans;

b. Sidewalks, driveways, parking, storage areas, utility lines, signs, topography, vegetation and tree removal, fences and mail boxes;

c. Representations with respect to compliance with laws, regulations, this Declaration, and any Supplementary Declaration;

d. Construction timetables and schedules;

e. Changes, amendments or revisions to such information previously submitted;

f. Time periods for review by the Architectural Review Committee;

g. Procedures for approval or disapproval by the Architectural Review Committee, and any appeals or resubmissions based thereon;

h. All other matters which are pertinent, desirable, reasonable or necessary to the operation of the Architectural Review Committee, which are not specifically set forth herein and which are not inconsistent with this Declaration; and

i. Fees for review.

Section 10.05. Decisions and Appeal. The decisions of the Architectural Review Committee shall be final except that any decision may be appealed to the Board of Directors by any Member who is aggrieved by any action or forbearance from action by the Architectural Review Committee or by any policy, standard, or guideline established by the Architectural Review Committee. Upon written request, such Member shall be entitled to a hearing before the Board of Directors within a reasonable time not to exceed thirty (30) days.

Section 10.06. Expenses. Any Person or entity submitting plans shall be responsible for the payment of reasonable charges established by the Architectural Review Committee for review of the Plans or amendments, modifications or changes to Plans, but no charges shall be imposed on any governmental authority using any portion of the Property.

Section 10.07 Disclaimer. The Board of Directors, the Architectural Review Committee, each director and each officer of the Association, each member of the Architectural Review Committee and the Association, and, if applicable, the Declarant, shall not be liable to any Owner, Builder, or any other Person on account of any claim, liability or expense suffered, incurred or paid or threatened against such Owner, Builder, or other Person arising or resulting from or in any way relating to the subject matter of the Review Process, any reviews, acceptances, inspections, permissions, consents or required approvals which must be obtained from the Architectural Review Committee or public authorities, whether given, granted or withheld. No approval of plans and no publication of architectural standards or bulletins shall be construed either to represent, guarantee or imply that such Plans or architectural standards will result in a properly designed Dwelling or other improvement, or to represent, guarantee or imply that any Dwelling or other structure or improvement will be built or constructed in a good, workmanlike manner. Approval of any particular Plans shall not be construed as a waiver of the right of the Architectural Review Committee to disapprove all or any portion of the Plans if such Plans are subsequently submitted for use in any other instance.

Section 10.08 Rules and Regulations. The Architectural Review Committee may publish and/or file for record such statements of policy, standards, and guidelines, and may establish such criteria relating to architectural styles or details, colors, size, set-backs, materials or other matters relating to architectural control, protection of the environment, including the use and application of fertilizers, pesticides and other chemicals, and the preservation of such aesthetic values, characteristics and amenities, as may be considered necessary and appropriate. No such rules, regulations, statements or criteria shall be construed as a waiver of any of these provisions, or any other provisions or requirement of this Declaration.

Section 10.09. Limitations. Construction in accordance with approved plans shall be commenced within three (3) months after approval, whether by affirmative action or by forbearance from action, and shall be substantially completed either within nine (9) months after construction commences, or within such other period as the Architectural Review Committee shall specify in the approval of the plans. If construction is not commenced or is not completed as required, approval of the plans shall be conclusively deemed to have lapsed and compliance with these provisions shall be required again.

Section 10.10. Variances. Due to natural terrain, lot configuration, proximity to streets and adjacent structures, and other reasons, it may be inadvisable to enforce set back and square footage requirements set forth herein or in any architectural guidelines. Therefore, the Architectural Review Committee may approve specific variances to setbacks, square footage and other architectural guidelines to the extent such variances are not unreasonable and do not adversely affect the Subdivision.

Section 10.11. Cessation and Removal. If any owner fails to secure approval of the Architectural Review Committee for construction plans or fails to construct the Dwelling pursuant to plans approved by the Architectural Review Committee, the Architectural Review Committee and/or the Board of Directors shall have authority to cause the Owner to cease construction and/or to remove any construction not in compliance with approved plans. Any Owner who fails or refuses to comply shall be in breach of this Declaration and shall be subject to all remedies available to the Association and the Members.

ARTICLE XI

EASEMENTS

Section 11.01 Utility and Drainage Easements. The Declarant, the Association, and each utility providing service to the Property shall have and is granted or reserved non-exclusive easements and rights-of-way in, through, across, on, over and under the portion of the Property which are not improved with Dwellings, buildings or other structures, including full rights of ingress and egress, for the construction, installation, operation, use, maintenance, repair and removal of utilities and all apparatus or systems related thereto and drainage easements as shown and designated on any Plat, and the right to remove any obstruction in any utility or drainage easement which may interfere with the use of any utility or drainage easement or with the construction, installation, operation, use, maintenance, repair and removal of such utility or drainage facility.

The Declarant shall have non-exclusive easements and rights-of-way in, through, across, on over and under the portion of the Common Area which is not improved with buildings or structures to store building supplies and materials, install, construct, maintain, reconstruct, repair, and remove sewers, water pipes, irrigation pipes, electrical wires or cables, telephone wires or cables, gas lines, storm drains, television cables, underground conduits, and any related improvements or appurtenances and for all other purposes reasonably related to the completion of construction and the provision of public or private utility services to any portion of the Property. Any and all conveyance documents from the Declarant to the Association with respect to the Common Area and any common facilities shall be conclusively deemed to incorporate the provisions of this Section 11.01, whether or not specifically contained in such conveyance documents or assignments. At the Declarant's request, the Association shall from time to time execute, acknowledge, and deliver to the Declarant such documents as the Declarant considers necessary to implement the provisions of this Section 11.01.

The reservations and rights in this Section 11.01 expressly include the right to (i) cut any trees, bushes, or shrubbery, (ii) make any gradings of the soil, and (iii) take any other similar action reasonable standards of health, safety and appearance.

Section 11.02. Damage from Ingress and Egress. Any entry by the Declarant, the Association, or any utility upon any Lot for the purposes permitted or contemplated by this Article XI shall be made with as little inconvenience to the Owner as reasonably practical. All physical damage to any Lot or improvement on a Lot resulting from or caused by such entry hall be promptly repaired and restored by the party causing such damage.

Section 11.03. Maintenance and Support Easements. Where Dwellings are permitted on or near the boundaries of a Lot, the Common Area, each Lot Dwellings are such Lot shall be subject to irrevocable easements for the benefit of the Association and the Owners of the adjoining Lots and abutting Dwellings for (i) drainage, (ii) the maintenance and unobstructed and uninterrupted use of any and all pipes, ducts, flutes, chutes, conduits, cables and wire outlets and utility lines, (iii) maintenance and lateral support of adjoining and abutting buildings and improvements, (iv) such portions of any building or improvements that may overhang a Lot or any portion of the Common Area, and (v) the walks and sidewalks serving such adjoining and abutting area.

Section 11.04. Drainage Pipes. The ownership, maintenance and repair of all drainage pipes, stormwater inlets, and other appurtenant drainage facilities located on or under any Lot shall be that of the Owner of such Lot. The Declarant shall have no duty or obligation to repair or replace such facilities after such facilities are initially constructed or installed.

ARTICLE XII

USE AND OTHER RESTRICTIONS AND REQUIREMENTS

Section 12.01. Use of Lots and Dwellings. Except (i) for the activities of a Builder during the construction and development of a Lot or the Common Area, (ii) for activities and uses expressly permitted and not substantially inconsistent with the provisions of this Declaration or pursuant to the approval of the Architectural Review Committee, (iii) as may be necessary or appropriate in connection with reasonable and necessary repairs or maintenance to any Dwelling or other improvements on a Lot, The Common Area, and (iv) as permitted by Section 12.10, each Lot and Dwelling shall be used only for residential purposes. No building shall be erected, altered, placed or permitted to remain on any lot other than one detached single-family Dwelling not to exceed two stories in height above grade, plus basement, if applicable. No mobile homes shall be allowed on any lot in said Subdivision.

No trade and business of any kind or nature may be conducted on or in such Lot or Dwelling. The use of a portion of a Dwelling as an office by the Owner shall not be considered to be in violation of this Section 12.01 if such use does not create regular or continual customer, client, or employee traffic and provided that not more than twenty-five percent (25%) of the floor area of any Dwelling shall be used for conducting a home occupation and any accessory building used in connection with such home occupation shall not exceed twenty-five percent (25%) of the floor area of the Dwelling all in accordance with the ordinances and regulations of any applicable government authority. In no event shall any Lot or Dwelling or other improvements on a Lot be used as a storage area for any building contractor, except as specifically permitted by this Declaration.

Section 12.02 Plans. Complete plans for each and all Dwellings, buildings and improvements shall be submitted to and approved by the Architectural Review Committee before any such Dwelling, building or other improvement is placed or construction is commenced on any Lot within the Subdivision. All construction must be completed as indicated in the Plans approved by the Architectural Review Committee.

All proposed new home construction is subject to review and written approval by the Declarant as long as the Declarant owns a lot within the Subdivision or has yet to relinquish control of the Association to the homeowners. Other new construction, additions or modifications shall be subject to review and written approval by the Declarant. The primary purpose of such review shall be to assist an Owner in achieving compliance with the building restrictions. Construction of new structures includes, without limitations, equipment and material, gazebos, arbors associated with landscaping, and other similar construction. Accordingly, no construction shall commence until the plans and specifications have been submitted to and approved in writing by the Declarant and a building permit is obtained from the applicable government authority for said new construction.

Section 12.03. Setbacks. A Dwelling or residence constructed on a Lot shall be constructed subject to the following setback requirements:

a. Front setbacks shall be fifteen (15) feet from the front lot line.

b. Side setbacks shall be five (5) feet from the front line; or fifteen (15) feet from the side street lot line.

c. Rear setbacks shall be ten (10) feet from the rear lot line.

d. The eaves of a Dwelling located within the setback lines set forth herein may extend across said setback lines, but shall not extend across any lot line.

Section 12.04. Square Footage.

Each Dwelling constructed shall have the following square footage: Exclusive of porches and garages, the heated and/or cooled living area of each Dwelling, main house or residential structure constructed on all such Lots shall contain at least One Thousand Nine Hundred (1900) square feet, and at least One Thousand Five Hundred (1500) square feet of the applicable minimum square footage must be contained on the ground floor level for a Dwelling of more than one (1) story.

Section 12.05. Courtyards. Unless waived by the Architectural Review Committee. Each Dwelling shall have a courtyard which will be constructed pursuant to specifications provided by the Architectural Review Committee.

Section 12.06. Lease of Dwelling. All dwellings and residence constructed and/or located on the property subject to this Declaration shall be for owner occupancy, except as specifically permitted herein. Further, except as specifically permitted herein, the lease or rental of a Dwelling or residence for any purposes, whether verbal or in writing, is expressly prohibited under this Declaration and shall constitute a violation of the terms and provisions of this Declaration. The only circumstance or situation in which lease or rental shall be permitted, is when the Dwelling or residence is of new constructions and in which either:

a. A period of at least one (1) year has elapsed from and after the building permit for that particular Dwelling has been issued, or;

b. A period of at least six (6) months has elapsed from and after the final inspection by the appropriate public building inspector has occurred, and the certificate of occupancy has been issued, whichever period of time is longer.

The above rental provisions are for the original builder/owner that obtained the original building permit. With any other owner the wait period is double the above noted wait periods, therefore being two (2) years after the building permit has been issued and/or one (1) year after the final inspection and certificate of occupancy has been issued (by the public building inspector) whichever period of time is longer.

Any permitted lease or rental agreement shall be for a period of time not less than one (1) year, and a fully executed complete and legible copy of any such lease or rental agreement shall be provided to the homeowners' association. No Dwellings or residences shall be sold, assigned, rented or leased under any time sharing, time interval or right to use programs or investments.

Section 12.07. Exterior Appearances. No chainlink fences shall be permitted within the Property except with the respect to (i) maintenance areas within the Common Area and (ii) chainlink fences erected by the Declarant or the Association. No aluminum foil shall be permitted on or over windows. No projections of any type shall be placed or permitted above the roof of any improvements except chimneys or vents or other objects approved by the Architectural Review Committee. Each Owner shall provide a screen storage area for trash or garbage receptacles, fuel tanks or similar storage receptacles, electric and gas meters, air conditioning equipment, clotheslines, and other similar or unsightly objects in order to conceal such objects from view from the roads and each adjacent Lot and the Common Area. Plans for such screen area delineating the size, design, texture, appearance and location must be approved by the Architectural Review Committee prior to the construction. Trash or garbage receptacles and fuel tanks may be located outside of such screened areas only if located underground. All Dwellings shall be brick, stone or smeared brick. No vinyl, wood, or cementitious board siding shall be allowed.

Section 12.08. Fences. All fences shall be constructed pursuant to the design and specifications established by the Architectural Review Committee. In addition, all Lots on the outer perimeter of the Property shall have and the Owner of each such Lot shall construct a buffer fence at least six feet (6') in height along such outer perimeter boundary. The buffer fences shall be constructed and maintained by the Owner of such Lots in accordance specifications provided by the Architectural Review Committee.

Section 12.09. Mailboxes. All mailboxes in the Subdivision shall be identical. The Architectural Review Committee will provide the Owner with the information needed for the Owner to purchase such mailbox and the location of the mailbox. Any mailbox which does not comply with the requirements of the Architectural Review Committee shall be removed or brought into full compliance with the approved mailbox.

Section 12.10. Driveway and Garages. Unless otherwise approved by the Architectural Review Committee, each Dwelling shall be served with off-street parking in the form of a concrete driveway extending from the pavement on a public street abutting the Lot on which the Dwelling

is situated to a garage, which garage must be attached to the Dwelling. The Garage must provide spaces for two regular size automobiles.

Section 12.11. Sidewalks. The Builder of the Dwelling on each Lot shall construct a sidewalk along the entire length of any street which abuts the Lot pursuant to plans and specifications established by the Architectural Review Committee.

Section 12.12. Signs. Except as may be required by legal proceedings, no signs, advertising or ornaments of any kind shall be placed, maintained or permitted on a Lot or within any windows or on the exterior of any Dwelling or other structure located on any Lot by any Person, including the Owner, without the approval of the Architectural Review Committee. The approval of any sign and posters, including name and address signs, and "for sale" signs, shall be upon such conditions the Architectural Review Committee shall determine from time to time, and approval may be arbitrarily withheld. The Board of Directors shall have the right to erect reasonable and appropriate signs on any portion of the Common Area and within easement areas established by this Declaration. No "for sale" signs can exceed 18"x24" in size.

Section 12.13. Other Buildings and Vehicles. No playhouse, tent, trailer, barn, storage building or other similar outbuilding or structures shall be temporarily or permanently placed or maintained on any Lot or on any other area of the Property without prior approval of the Architectural Review Committee, except small boats or light residential equipment which must be screened by an approved fence and not visible from any street, Lot or Common Area. No mobile home shall be temporarily or permanently placed or maintained on any Lot or Common Area. Each Owner shall provide parking for at least two (2) automobiles for each Dwelling owned or maintained by such Owner in an enclosed two (2) car attached garage. All garages must have doors. When not in use, all garage doors shall be kept closed. To the extent possible, all automobiles owned or used by an Owner or occupier of a Lot, except temporary guests and visitors, shall be parked in enclosures which screen the automobile from street view. The Board of Directors shall have authority to adopt and promulgate rules and regulations to govern or to prohibit the outside storage, maintenance, operations or parking of vehicles described below on any Lot, within any Dwelling or other structure, or on any portion of the Common Area. Such rules and regulations shall apply to motor homes, tractors, trucks, commercial vehicles or any type, campers, motorized campers or trailers, boats or other water craft, boat trailers, motorcycles, motorized go-carts, or any other similar or related forms of transportation vehicle or device, except pickup trucks. No Owner or other occupant of any Lot shall repair or restore any vehicle of any kind on any Lot, within any Dwelling or other structure, except for emergency repairs but only to the extent necessary to enable the movement of such vehicle to a property repair facility.

Section 12.14. Unsightly Conditions and Nuisances. Each Owner has the responsibility to prevent the development of any unclean unsightly or unkept conditions of buildings or grounds, including but not limited to all fences and buffer screens/fences whether made of vegetation or other acceptable materials, on his Lot which may tend to decrease the beauty or aesthetic characteristics of any portion of the property, including the Lot, and is obligated to maintain and service all grass and landscaped areas, including but not limited to all fences and buffer screens/fences whether made of vegetation or other acceptable materials, on his Lot and maintain the area of the Street

and right-of-way abutting his Lot in a clean condition. Any Owner who fails to maintain his Lot shall be liable to the Association for all costs or expenses incurred in maintaining the Lot.

No rubbish or debris of any kind shall be dumped, placed or permitted to accumulate or remain upon any Lot or other portion of the Property. No nuisance or odors shall be permitted to exist, operate or remain upon or arise from any Lot or any other portion of the Property which are unsanitary, unsightly, offensive or detrimental to Persons using or occupying any other portion of the Property. Nocuous or offensive activities shall not be permitted or conducted in or on any Lot or Dwelling or any portion of the Common Area. Each Owner, his family, his Invites, and all other Persons shall refrain from any act or use of a Lot, the Dwelling or other structures on the Lot, Common Area, which might cause disorderly, unsightly or unkept conditions or which might cause embarrassment, discomfort, annoyance or nuisance to the occupants of other portions of the Property or which might or would result in a cancellation of any insurance for any portion of the Property or which would be in violation of any laws, governmental code or regulation, including but not limited to firearms, archery equipment or other devices of a similar nature which may be classified as weapons. Without limiting the generality of the foregoing conditions, no exterior speakers, horns whistles bells or other sound devices shall be located, used or placed within the Property, except security, fire, adverse weather or similar alarm devices used exclusively for such purposes. Any Owner or other Person who dumps, places, or permits his family or Invitee to dump or place any trash or debris upon any portion of the Property shall be liable to the Association for all costs and expenses incurred in the removal of such trash or debris incurred or paid by the Association which shall be payable immediately upon demand by or from the Association and shall be considered to be a Special Assessment against the Lot.

Section 12.15 Antennae and Satellite Dishes. No television antennae, television receiving device, radio receiver or similar device shall be attached to or installed on any Lot or any Dwelling other structure on the Lot or any portion of the Property, unless approved by the Architectural Review Committee. Satellite dishes not exceeding twenty-four inches (24") in diameter are allowed; however, the location of such satellite dish on the Lot shall be approved by the Architectural Review Committee. No radio or television signals or any other form of electromagnetic radiation shall be permitted to originate from any Lot which may unreasonably interfere with reception of other signals within the Property. The Declarant and the Association shall have the right, but not the obligation to install, operate, maintain and repair equipment necessary for master television antennae, cable television, mobile radio, security system or other similar systems within the Property. The Declarant or the Association may permit a private entity to provide such service for a fee.

Section 12.16. Lights. The design and location of landscape lighting fixtures shall be subject to the approval of the Architectural Review Committee. Neither the lighting fixtures nor any other illumination devices, including Christmas ornaments, located anywhere on the Dwelling or other structure or grounds of any Lot shall be located, directed or of such intensity so as to adversely affect the nighttime environment of any adjoining Lot or any portion of the Common Area.

Section 12.17. Pets. No animals, livestock or poultry of any kind, shall be raised, bred, kept, staked or pastured on any Lot or any portion of the Common Area, except dogs, cats, birds, or other household pets for non-commercial purposes and which are kept in a Dwelling or fenced yards

and are not a source of annoyance or a nuisance to the Property or any Member. No kennels are permitted and no more than two (2) dogs or cats are allowed per residence. Any structure used to house such pets is subject to prior approval of the Architectural Review Committee. The Board of Directors shall have the right, but not the obligation, to prohibit or bar certain dogs or breeds of dogs or other household pets from any Lot or Dwelling or other structure on the Lot or any portion of the Property, including but not limited to particular dogs whose barking disturbs other Members. Pets shall be attended at all times and shall be registered, licensed and inoculated as required by law. Pets shall not be permitted upon the Common Area unless accompanied by an adult individual and leashed. The Board of Directors shall have the right to adopt such additional rules and regulations regarding pets from time to times as considered necessary or appropriate, including more restrictive "leash" regulations. The Owner of any pet shall be responsible for cleaning up after such pet.

Section 12.18. Sales and Construction Activities. The Declarant is expressly permitted and authorized to construct and maintain such facilities and to conduct such activities as may be reasonably appropriate, necessary, required, convenient or incidental to the construction, completion, improvement and sale of any Lot and/or Dwelling or the development of any Lot, Dwelling and other improvements, the Common Area, including, without limitation, the installation and operation of sales and construction trailers, offices and other structures or other improvements. The location of any construction trailers of any Builder shall be subject to the Declarant's approval. The right to maintain such facilities and conduct such activities specifically includes the right to use one or more Dwellings as a model residence, as offices for the sale of any Lot and/or Dwelling, and for related activities. The Declarant is expressly permitted and authorized to use, stock, maintain, locate, store and place on any portion of the Property any and all equipment, tools and vehicles as may be reasonably appropriate, necessary, required, convenient or incidental to such construction, improvement, completion, sale or development, including but not limited to, construction equipment and construction machinery, machines and vehicles.

Section 12.19. Time Sharing. No Lot or Dwelling shall be sold, assigned or leased under any time sharing interval or right-to-use programs or investments.

Section 12.20. Trespass. Whenever the Association and/or the Declarant is permitted by this Declaration to repair, clean, preserve, clear out or do any action on any part of the Property, including perform obligations or duties imposed on any Owner under this Declaration, then entering any Lot or any portion of the Property for such purposes and taking such shall not be or be deemed to be trespass.

Section 12.21. Replatting and Changes to Lot Lines. The Declarant expressly reserves the right to replat any Lot or Lots owned by the Declarant and to take such other action as may be reasonably appropriate, convenient or necessary to make such replatted Lot or Lots suitable for use as a building site for a Dwelling, including, but not limited to, the relocation of easements, walkways, rights of ways and other amenities to conform to the new boundaries of such replatted Lots. The boundary lines of any Lot not owned by the Declarant may be changed only with the written consent of the Board of Directors or the Declarant if the Declarant owns any Lots subject to the Declaration. An appropriate instrument shall be filed of record in the land records of the Madison County, Mississippi, to reflect any action set forth in this Section.

Section 12.22. Combination of Contiguous Lots. The provisions of this Section shall not prohibit an Owner of two or more contiguous Lots from combining such Lots into one larger Lot or prohibit the Owner of three or more contiguous Lots from combining such Lots into fewer Lots, provided that unless approved in writing by the Board of Directors or by the Declarant, each of the resulting Lots are larger and contain a minimum Lot frontage equal to or greater than the original frontage on the Lot having the least frontage before such Lots were combined. Thereafter, only the exterior boundary lines of the resulting larger Lot or Lots shall be considered in the interpretation of this Declaration. An appropriate instrument shall be filed of record in the land records of the Madison County, Mississippi, to reflect any action set forth in the Section.

Section 12.23. Certain Construction Rights. The Declarant expressly reserves the right, but the Declarant shall not be obligated, to build bridges or walkways across any natural or manmade water are in, on, abutting or contiguous to the Property.

Section 12.24. Easement Interference. No structure, planting or other material shall be placed or permitted to remain upon any Lot which may damage or interfere with any easement for the installation or maintenance of utilities, or which may unreasonably change, diminish, obstruct, or retard the direction or flow of surface runoff in any drainage easement, swale or channel.

Section 12.25. Water Wells and Septic Tanks. No water wells or septic tanks shall be permitted on any Lot and no Plans shall be approved by the Architectural Review Committee unless such Plans provide that the Lot will be served by the water and sewer system serving the Property. This restriction shall not prevent the Declarant from developing a community water and sewer system to serve the Property to a governmental authority or company for the purpose of developing a water and sewer system to serve the Property.

Section 12.26. Reconstruction after Fire or Other Casualty Loss. If a Dwelling is partially or completely destroyed by fire or other casualty, the Owner of such Dwelling shall promptly clear the Lot or restore or reconstruct such Dwelling as provided by the Bylaws.

Section 12.27. Vacant Lot Maintenance. Each Owner shall be responsible for the proper seeding, fertilization, watering, mowing, and maintenance of any Lot which is vacant or undeveloped. If fill is placed on the Lot and the construction of the improvements is not promptly commenced and completed, the Owner will be required to maintain such Lot. Any Owner who fails to maintain his Lot shall be liable to the Association for all costs or expenses incurred in maintaining the Lot.

Section 12.28. Private Streets. At any time prior to dedication to a governmental entity, the Declarant may, but is not obligated to, declare the Streets in any Neighborhood to be private streets by filing a Supplementary Declaration to that effect. In such event, the Declarant shall convey to the Association within a reasonable time thereafter all right, title and interest in and to such private streets. Notwithstanding such conveyance, the Declarant shall be responsible for the construction of the private streets. The private streets will be constructed in accordance with generally acceptable standards for construction in residential neighborhoods in the City of Ridgeland, Mississippi. Prior to the final overlay of the surface or wearing course, the Declarant shall be responsible for the repair and maintenance or the private streets. After the Subdivision is 75%

complete, the streets will be dedicated to the City of Ridgeland as public streets. The Declarant shall cause the construction of such Streets to be completed by overlaying the surface of wearing course of the pavement. The determination of such final construction shall be solely in the discretion of the Declarant. Upon completion of the overlay of the surface or wearing course, all responsibility for the repair and maintenance of such Street shall be assumed by the Association. Those residents on any private street or in any Neighborhood in which the Streets are designated as private streets shall be responsible for the repair and maintenance of such private streets, and gates thereon if installed pursuant to Section 12.22, and shall be subject to Assessments for such repair and maintenance. At any time 75% of the Members of any Neighborhood with private streets elect in writing, the Association shall dedicate the private streets in such Neighborhood to a governmental entity.

Section 12.29. Trees. No tree within ten (10) feet of any lot line on the perimeter of the Property which is greater than six (6) inches in diameter at ground level shall be cut without the consent of the Architectural Review Committee, unless such tree is in eminent danger of falling.

Section 12.30. Commencement of Construction. The Owner of each Lot shall begin construction of a Dwelling on such Lot within eighteen months of the date of the Deed conveying title from the Declarant to the first Owner unless the Declarant or the Architectural Review Committee grants an extension of time to begin such construction.

Section 12.31. Drainage. It shall be the responsibility of the Owner of each Lot to assure that the construction of a Dwelling on such Lot does not materially change or alter the drainage of stormwater on or across any Lot and to prevent any unusual or abnormal drainage or runoff of stormwater from such Lot onto any other Lot, any street, or any other part of the Property. The Declarant shall have no obligation or responsibility for any drainage or runoff of stormwater.

Section 12.32. Construction Cleanup. Prior to pouring the slab or constructing the foundation on any Lot, the Owner shall cause to be placed on such Lot a dumpster or other trash receptacle. All construction debris and other trash shall regularly be placed in such receptacle. No trash, debris or scrap materials shall be burned on any Lot.

ARTICLE XIII

ENFORCEMENT OF DECLARATION

Section 13.01. Compliance. If any provision of this Declaration is breached or violated or threatened to be breached or violated by any Owner, Member or other Person, each of the other Owner, each Member, the Declarant and/or the Association, jointly or severally, shall have the right, but not the obligation, to proceed at law or in equity to compel a compliance with, or to prevent the threatened violation or breach of, the provisions of this Declaration. If any structure or other improvement located on any portion of the Property, including any Lot, violates any provision of this Declaration, the Declarant and/or the Association, jointly or severally, shall have the right, but not the obligation, to enter upon any portion of the Property, including any Lot, to abate or remove such structure or other improvement at the cost and expense of the Owner of the Lot where such structure or improvement is located or which otherwise causes such violation, if

the violation is not corrected by such Owner within 30 days after written notice of such violation. Any Person entitled to file or maintain a legal action or proceeding for the actual or threatened violation or breach of this Declaration shall be entitled to recover attorney's fees and other costs and expenses attributable to such action or proceeding, and the Association shall be entitled to recover and receive any other amounts specified in Section 6.03. Any such entry and abatement or removal shall not be or deemed to be a trespass. The failure by any Person for any period of time to enforce any provision of this Declaration shall not be or be deemed a waiver of the right to enforce or otherwise bar or affect the enforcement of any and all provisions of this Declaration at any time, including any future time.

Section 13.02. Enforcement. This Declaration and any Supplement thereto shall be enforced by any appropriate proceeding at law or in equity (i) against any Person who breaches or violates or threatens to breach or violate any provisions of this Declaration, (ii) to recover damages for any such breach or violation, (iii) to collect any amounts payable by any Owner to the Association under this Declaration, including Assessments, attorneys' fees, costs of collection, late charges, overhead charges or other amounts incurred by the Association to perform or discharge any obligation or duty of an Owner under this Declaration or otherwise specified under this Declaration or otherwise specified in this Declaration, including Section 6.03, and (iv) to enforce any lien created by this Declaration. There is hereby created and declared to be a conclusive presumption that any actual or threatened violation or breach of this Declaration cannot be adequately remedied by an action at law exclusively for recovery of monetary damages. The Declarant, the Association and each Owner by acceptance of a deed or other conveyance document to a Lot, waives and agrees not to assert any claim or defense that injunctive relief or other equitable relief is not an appropriate remedy.

ARTICLE XIV

GENERAL PROVISIONS

Section 14.01. Duration. This Declaration shall run with and bind the land subject to this Declaration, and shall inure to the benefit of and be enforceable by the Declarant, the Association and the Owner of any Lot subject to this Declaration, and each one's respective legal representatives, heirs, devisees, successors and assigns, until December 31, 2029. After such date, this Declaration shall be automatically extended for the successive periods of ten years unless at least one year prior to the effective date of such abolishment or termination, a Supplement signed by a majority of the Owners has been properly filed for record to abolish, amend, or terminate all or a substantial portion of this Declaration.

Section 14.02. Amendments. Subject to any specific limitation or restrictions set forth herein, this Declaration or any Supplementary Declaration hereto may be amended or supplemented as follows:

a. At any time there is a Class B Member, by an instrument executed by the Declarant and filed for record in Madison County, Mississippi.

b. At any time there is not a Class B Member, by an instrument executed by the Owners of more than fifty percent (50%) (or such higher percentage if required hereunder) of the Lots subject to or affected by the Amendment or Supplementary Declaration.

Section 14.03. Interpretation. The provisions of this Declaration shall be construed to implement the purpose of the creation of a uniform plan for the development of the Property.

Section 14.04. Severability. Invalidation of any provision of this Declaration by judgment or court order shall not affect any other provisions of this Declaration which shall remain in full force and effect.

Section 14.05. Headings. The headings contained in this Declaration are for reference purpose only and shall not in any way affect the meaning or interpretation of this Declaration.

Section 14.06 Notices to Owner. Any notice required to be given to any Owner under the provisions of this Declaration shall be deemed to have been properly delivered when deposited in the United States mail, postage prepaid, addressed to the last known address of the Person who appears as Owner on the records of the Association, or, if applicable, the Declarant, at the time such notice is mailed.

Section 14.07. Successors of Declarant. All or any portion of any and all rights, reservations, easements, interests, exemptions, privileges and powers of the Declarant under this Declaration may be assigned and transferred exclusively by the Declarant with or without notice to the Association. The designation of a successor or assignee as Declarant shall be made by a written instrument filed of record in the land records of Madison County, Mississippi. Such transfer may be made as to part or all of the Property.

Section 14.08. Incorporation by Reference on Resale. In the event any Owner sells or otherwise transfers any Lot, any deed or other conveyance document purporting to the effect such transfer shall contain a provision incorporating the provisions of this Declaration by reference. However, failure to include such provision shall not cause the Lot not to be subject to this Declaration.

Section 14.09. No Dedication to Public Use. No provision of this Declaration shall be construed as a dedication to public use or as an acceptance for maintenance of any Common Area or common facilities by any public agency or authority or by any utility, or shall be interpreted as imposing upon any public agency or authority or any utility any responsibility or liability for the maintenance and operation of any portion of the Common Area or common facilities.

Section 14.10. Notice to First Mortgage Holders. The Association shall notify the holder of the First Mortgage on any Lot for which any Assessment shall be and remain delinquent for at least 60 days. The Association shall notify the holder of the First Mortgage on any Lot for which there is default by the Owner with respect to performance of any other obligation or duty under this Declaration which default remains uncured for at least 60 days following the date of such default. Any failure to give any such notice shall not affect the validity or priority of any First Mortgage on any Lot, and the protection provided in this Declaration to the holder of any First Mortgage shall not be altered, modified or diminished by reason of such failure. Any such failure shall not

affect the validity of the lien of any Assessment or affect any of the priorities for liens as specified in Article VI.

No suit or other proceeding may be brought to foreclose the lien for an Assessment except after 10 days written notice to the holder of the First Mortgage encumbering the Lot which is the subject matter of such suit or proceeding.

Any holder of a First Mortgage on any Lot may pay any taxes, rents, utility charges, assessments or other charges levied against the Lot or Common Area or common facilities which are in default and which may or have become a charge or lien against any Lot or the Common Area or common facilities, and may pay any overdue premiums on any hazard or liability insurance policy, of any policy, relating to any Lot or the Common Area or common facilities. Any holder of a First Mortgage who advances any such payment shall be due reimbursement of the advanced amount from the Owner of the Lot or the Association as the case may be; however, the Association shall not be liable for any amount advanced on behalf of any party other than itself.

Section 14.11. Captions and Gender. The captions contained in this Declaration are for convenience only and are not a part of this Declaration and are not intended to limit or enlarge the terms and provisions of this Declaration. Whenever the context requires, the male shall include all genders and the singular shall include the plural.

Section 14.12. Exhibits. All Exhibits which are referred to in this Declaration are made a part of and incorporated into this Declaration by reference.

Section 14.13. Governing law. The operation of the Association and the enforcement of these covenants shall be governed by and construed in accordance with the laws of the State of Mississippi.

ARTICLE XV

DECLARANT'S RIGHTS AND RESERVATIONS

Section 15.01. Declarant's rights and Reservations. No provision in the Articles, the Bylaws or this Declaration shall limit, and no Owner or the Association shall interfere with, the right of Declarant to (i) subdivide or resubdivide any portions of the Property, (ii) complete or alter improvements or refurbishments to and on the Common Area or any portion of the Property owned by Declarant, or (iii) alter the construction plans and designs, or construct such additional improvements or add future phases as Declarant deems advisable during development of the Property. Such right shall include, but shall not be limited to, the right to install and maintain such structures, displays, signs, billboards, flags and sales offices as may be reasonably necessary for the conduct of Declarant's business or completion of the work and disposition of the Lots by sale or otherwise. Each Owner by accepting a deed or other conveyance document to a Lot hereby acknowledges that the activities of Declarant may temporarily or permanently constitute an inconvenience or nuisance to the Owners, and each Owner hereby consents to such inconvenience or nuisance.

[EXECUTION PAGE(S) FOLLOW]

IN WITNESS WHEREOF, the Declarant has caused this Declaration to be duly executed on this the 21st day of January, 2015.

SCM DEVELOPMENT, LLC
a Mississippi limited liability company

By: _____
Name: MATT HERFURTH
Title: MANAGING MEMBER

STATE OF ~~MISSISSIPPI~~ Missouri

COUNTY OF Camden

Personally appeared before me, the undersigned authority in and for the said county and state, on this 21st day of January, 2015, within my jurisdiction, the within named T. Matthew Herfurth, who acknowledged that he is the Managing Member of SCM Development, LLC, a Mississippi limited liability company, and that for and on behalf of the said limited liability company, and as its act and deed he executed the above and foregoing instrument, after first having been duly authorized by said limited liability company so to do.

Denise L Neeley
Notary Public
Printed Name: Denise L Neeley

My commission expires: 6-17-17

NOTARY PUBLIC NOTARY SEAL STATE OF MISSOURI

DENISE L. NEELEY
My Commission Expires
June 17, 2017
Camden County
Commission #19494000

EXHIBIT A

Property Description

A certain parcel of land containing 9.42 acres more or less and being part of Lots 1 and 4 of Block 18, Highland Colony Subdivision, said parcel is located in the Southeast Quarter of the Southeast Quarter of Section 19, Township 7 North, Range 2 East, City of Ridgeland, Madison County, Mississippi and being more further described to wit:

COMMENCING at a found concrete monument marking the Northeast corner of the Southeast Quarter of Section 19, Township 7 North, Range 2 East, City of Ridgeland, Madison County, Mississippi; thence South 00°18'48" East for a distance of 1,321.95 feet to a found ½" rebar; thence South 00°19'29" East for a distance of 693.15 feet to a set ½" X 24" rebar and the POINT OF BEGINNING for the following described parcel of land; thence South 00°19'29" East for a distance of 620.29 feet to a found ½" rebar on the North Right of Way of Jackson Street, a paved public road as now laid out and in use this date (November 2014); thence along said Right of Way run South 89°47'30" West for a distance of 343.35 feet to a found ½" rebar; leaving said Right of Way run North 00°10'32" West for a distance of 392.78 feet to a found ½" rebar; thence North 89° 29'20" West for a distance of 320.02 feet to a found ½" rebar; thence North 00°06'07" West for a distance of 919.23 feet to a found ½" rebar; thence South 89°58'57" East for a distance of 261.14 feet to a set ½" x 24" rebar; thence South 00°01'03" West for a distance of 90.92 feet to a set ½" x 24" rebar; thence along a curve to the left with a radius of 50.00 feet for a distance of 22.52 feet (Chord = South 48°57'31" West – 22.33 feet) to a set ½" x 24" rebar; thence West for a distance of 84.81 feet; thence South 00°19'28" East for a distance of 564.10 feet to a set ½" x 24" rebar; thence North 89°48'31" East for a distance of 100.00 feet to a set ½" x 24" rebar; thence South 66°21'08" East for a distance of 54.79 feet to a set ½" x 24" rebar; thence North 89°40'31" East for 200.00 feet to a set ½" x 24" rebar; thence South 86°35'39" East for a distance of 50.11 feet to a set ½" x 24" rebar; thence North 89°40'33" East for a distance of 100.00 feet back to the POINT OF BEGINNING for the above described parcel of land containing 9.42 acres more or less.

Attachment G

Maison Bleu Phase I

Draft of Architectural Guidelines for
Maison Bleu Subdivision

Provided by Matt Herfurth of SCM in 2013

ARCHITECTURAL GUIDELINES FOR MAISON BLEU

DRAFT

ARCHITECTURAL GUIDELINES
FOR
MAISON BLEU

Guidelines include, but are not limited to, the following:

1. Plan to be provided with lot. Builder will have choice of plan. Changes can be made by Designers II (Betsy Morrow).

2. All proposed new home construction is subject to review and written approval by the developer as long as the developer owns a lot within the subdivision or has yet to relinquish control of the homeowners' association to the homeowners. Other new construction, additions or modifications shall be subject to review and written approval by the developer. The primary purpose of such review shall be to assist property owners in achieving compliance with the building restrictions. Construction of new structures includes, without limitations, equipment and material, gazebos, arbors associated with landscaping, and other similar construction. Accordingly, no construction shall commence until the plans and specifications have been submitted to and approved in writing by developer and a city building permit obtained for said new construction.

3. All lots shall be used for residential purposes only. No building shall be erected, altered, placed or permitted to remain on any lot other than one detached single-family dwelling not to exceed two stories in height above grade, plus basement, if applicable. No mobile homes shall be allowed on any lot in said subdivision.

4. All driveways must be constructed of concrete and all houses must have front concrete walks extending from the entrance of the house to the driveway or the street.

5. At the time of construction of a dwelling on any lot in this subdivision, the then owner will construct a concrete sidewalk 16" from and parallel to the curb, forty-two inches (42") in width and four inches (4") thick, across the front of said lot and street side if a corner lot excepting only the paved driveway. The surface of said sidewalk shall have a broom finish and shall connect evenly with any sidewalk existing of an existing lot or any driveway.

6. All front yards to be sodded and if said lot is a corner lot, the front yard and the side yard facing a street will be sodded from the house to the street. Grass, weeds, and vegetation on each lot bought shall be kept mowed at regular intervals by the owners, so as to maintain the same in a near and attractive manner. One (1) eight foot (8') Willow Oak must be planted ten feet (10') behind the curb at completion of the construction of the house. If tree is not planted within 90 days after completion of the house, Developer at its own option and discretion may plant tree and backcharge Builder/Owner. Trees, shrubs, and plants which die shall be promptly removed and replaced from such lot. The above restrictions apply to all lots purchased before and after a house is built on the lot. The developer may, at its option and in its discretion, have dead trees removed from the property and mow and remove debris, and the owner of such lot shall be obligated to reimburse that developer for the cost of such work. Should he refuse or neglect to comply with the terms of this paragraph, said cost shall be a lien against said property.

7. No fence, wall or hedge shall be placed on any of the said lots nearer to any street than fifteen (15') feet behind the front corners of the house on said lot. Corner lot fencing, wall or hedges shall not be located any closer to the side street property line than the house setback. No fence, wall or hedge shall be placed on any portion of the lot higher than six (6') feet from the ground. No utility, chain link or similar type of fencing shall be constructed on any lot unless it is inside of and screened from view on all sides by wood fencing. Wood fencing material must be either cypress, redwood, or cedar, unless architectural exception is granted.

8. A lot owner, in building or causing to be built the original dwelling on any lot, shall not substantially duplicate the exterior elevation, including design or architecture, of any other dwelling then existing on the same street within three hundred (300) feet within said subdivision. For the purpose of this paragraph, a dwelling shall be considered in existence from the time excavation for the foundations is begun until said dwelling is removed from the development or is destroyed.

9. Lots along the park must have wrought iron fence. Other fences must be provided by Jefcoat Fence. All fences to be uniform.

10. No dwelling shall be permitted on any lot at a cost, exclusive of lots, of less than Two Hundred Thirty Thousand ($230,000), based upon cost levels prevailing on the date these covenants are recorded. It being the intention and purposes of this covenant to assure that all dwellings shall be of a quality of workmanship and materials substantially the same or better than that which can be produced on the date these covenants are recorded at the minimum cost stated herein for the minimum permitted dwelling size. For a one (1) story house and a one and one half (1.5) story house, exclusive of open porches, garages and storage rooms, the ground floor area will not be less than fifteen hundred (1,500) square feet. For a two (2) story house the ground floor area, exclusive of open porches, garage and storage rooms shall not be less than one thousand (1,000) square feet. It being understood that no house will have less than eighteen hundred (1,800) square feet of livable floor area (heated). No house shall have a roof pitch less than ten/twelve (10/12) toward street.

11. No building, inclusive of garage, shall be located on any residential lot nearer than thirty (30) feet from the front lot line or nearer than five (5) feet to any side lot line on interior lots. No building shall be located on any lot nearer than twenty-five (25) feet from the back property line. No building shall be located on any lot nearer than thirty (30) feet from the side street lot line. Eaves of buildings located within the setback lines provided in this paragraph may extend across said setback lines, but shall not extend across any lot lines.

12. Outbuildings, when detached from the main building, shall be setback of the rear line of the main building on said lot, and shall not be located nearer than five (5) feet to the side or rear lot line. Any outbuilding must be approved in writing by the developer prior to beginning construction and be screened by an approved fence. Also, the sides and roof to match the house. The maximum height of walls not to exceed the fence height and the total height at top of roof not to exceed eight and one-half (8.5) feet from the ground. The only visible part of the building over the six (6) foot fence to be the roof which shall not extend above the fence more than two and one-half (2.5) feet. The floor area of the structure shall not exceed eighty (80) square feet. Any variance from this must be approved in writing by the developer prior to beginning construction. A county building permit must be obtained before commencing construction. No metal or prefabricated buildings are permitted.

13. No satellite dish exceeding twenty-four inches (24") in diameter is allowed. No satellite dish to be installed on front of house. Property owners shall select the least conspicuous site, relative to views primarily from the street, but also from adjoining lots, for mounting any satellite dish as is practical considering such factors which include, but are not limited to, satellite location, terrain and foliage. If the developer determines that a property owner has not selected the least conspicuous site, the property owner shall remove and relocate the satellite dish.

14. No antennas, Citizens Band or otherwise, that require towers or guide wires, or are attached to house including chimney shall be permitted on any lot in said subdivision at any time without prior written approval by the developer.

15. Mailboxes: From "Copper Sculptures" designed for Maison Bleu.

16. Roofing: All roofing shall be Weatherwood. All roofing shall be the same Architectural grade.

17. Front Main Entrance Doors: Shall be either a 6 panel, (4) lite or (6) lite door panel per attached detail and shall be made of cypress, cedar, mahogany, or another wood approved by developer. Doors will have a stained finish. All doors to be eight feet (8') in height. Front door to be approved by Architectural Review.

18. Exterior Window Shutters: Will be made in slat style per attached drawing with hinges so shutters can be operable or fixed and will be stained/painted an earthtone. Shutters will be made out of cypress, cedar, mahogany, or another wood approved by developer. Exterior of all homes should be a minimum of 75% brick. Vinyl siding will not be allowed on any of the exterior surfaces. Front shutters to be hinged working shutters.

19. Exterior to be mainly brick with hardiboard, wood, or stucco. No artificial stucco. Brick may be painted or smeared. Brick selection must be approved along with colors by Architectural Review. Front or side porches needing a metal roof may use tarnished copper colored metal.

20. Every house must have a front courtyard using a combination of brick, stone, or wrought iron. Gates must be wrought iron.

21. A true copper Gas Light at the front door or in courtyard must be used.

22. All windows must be vinyl clad. Options are 1/1, 2/2, or 4/4 grid patterns.

23. Garage ceilings may be dropped to nine feet (9'). Two (2) carriage style garage doors required on front & side entry garages.

24. Granite or higher end countertops required.

25. No fiberglass showers allowed.

26. All stacks need to be on the side or back – painted the color of the roof.

27. A/C Units must be screened and not visible from the street.

28. Stained floors may only be used on patio/outside areas, or as approved by Architectural Review.

29. Interior floors to be wood, brick, tile, carpet or ugprades of these options as approved by Architectural Review.

30. Exterior colors to be approved by Architectural Review.

31. Minimum of ten foot (10') plate height ground to eave with exception of small shed roof coming off the house.

32. Icyene insulation required in all homes.

33. Developer must sign off on end of Construction.

See Covenants for more detail on Architectural Review process.

Attachment H

Maison Bleu, Phase I

Draft of Architectural Guidelines

Provided by Matt Herfurth of SCM in 2024

ARCHITECURAL GUIDELINES
FOR
MAISON BLEU

Guidelines include, but are not limited to, the following:

1. Plan to be provided with lot. Builder will have choice of plan. Changes can be made by Woody at Inspirations Design.

2. All proposed new home construction is subject to review and written approval by the developer as long as the developer owns a lot within the subdivision or has yet to relinquish control of the homeowners' association to the homeowners. Other new construction, additions or modifications shall be subject to review and written approval by the developer. The primary purpose of such review shall be to assist property owners in achieving compliance with the building restrictions. Construction of new structures includes, without limitations, equipment and material, gazebos, arbors associated with landscaping, and other similar construction. Accordingly, no construction shall commence until the plans and specifications have been submitted to and approved in writing by developer and a city building permit obtained for said new construction.

3. All lots shall be used for residential purposes only. No building shall be erected, altered, placed or permitted to remain on any lot other than one detached single-family dwelling not to exceed two stories in height above grade, plus basement, if applicable. No mobile homes shall be allowed on any lot in said subdivision.

4. All driveways must be constructed of concrete and all houses must have front concrete walks extending from the entrance of the house to the driveway or the street.

5. At the time of construction of a dwelling on any lot in this subdivision, the then owner will construct a concrete sidewalk 16" from and parallel to the curb, forty-two inches (42") in width and four inches (4") thick, across the front of said lot and street side if a corner lot excepting only the paced driveway. The surface of said sidewalk shall have a broom finish and shall connect evenly with any sidewalk existing of an existing lot or any driveway. City requirements will govern.

6. All front yards to be sodded and if said lot is a corner lot, the front yard and the side yard facing a street will be sodded from the house to the street. Grass, weeds, and vegetation on each lot bought shall be kept mowed at regular intervals by the owners, so as to maintain the same in a near and attractive manner. One (1) eight foot (8') Willow Oak must be planted ten feet (10') behind the curb at completion of the construction of the house. If tree is not planted within 90 days after completion of the construction of the house, Developer at its own option and discretion may plant tree and backcharge Builder/Owner. Trees, shrubs, and plants which die shall be promptly removed and replaced from such lot. The above restrictions apply to all lots purchased before and after

house is built on the lot. The developer may, at its option and in its discretion, have dead trees removed from the property and mow and remove debris, and the owner of such lot shall be obligated to reimburse that developer for the cost of such work. Should he refuse or neglect to comply with the terms of this paragraph, said cost shall be a lien against said property.

7. No fence, wall or hedge shall be placed on any of the said lots nearer to any street than fifteen (15') feet behind the front corners of the house on said lot. Corner lot fencing, wall or hedges shall not be located any closer to the side street property line than the house setback. No fence, wall or hedge shall be placed on any portion of the lot higher than six (6') feet from the ground. No utility, chain link or similar type of fencing shall be constructed on any lot unless it is inside of and screened from view on all sides by wood fencing. Wood fencing material must be either cypress, redwood, or cedar, unless architectural exception is granted.

8. A lot owner, in building or causing to be built the original dwelling on any lot, shall not substantially duplicate the exterior elevation, including design or architecture, of any other dwelling then existing on the same street within three hundred (300) feet within said subdivision. For the purpose of this paragraph, a dwelling shall be considered in existence from the time excavation for the foundations is begun until said dwelling is removed from the development or is destroyed.

9. Lots all along the park must have wrought iron fence. All fences to be uniform.

10. It being the intention and purposes of this covenant to assure that all dwellings shall be of quality of workmanship and materials substantially the same or better than that which can be produced on the date these covenants are recorded at the minimum cost stated herein for the minimum permitted dwelling size. For a one (1) story house and a one and one half (1.5) story house, exclusive of open porches, garages and storage rooms, the ground floor area will not be less than fifteen hundred (1,500) square feet. For a two (2) story house the ground floor area, exclusive of open porches, garage and storage rooms shall not be less than one thousand (1,000) square feet. It being understood that no house will have less than eighteen hundred (1,700) square feet of livable floor area (heated). No house shall have a roof pitch less than ten/twelve (10/12) toward street.

11. City of Ridgeland requirements will govern all setbacks. Eaves of buildings located within the setback lines provided in this paragraph may extend across said setback lines, but shall not extend across any lot lines.

12. Outbuildings, when detached from the main building, shall be setback of the rear line of the main building on said lot, and shall not be located nearer than five (5) feet to the side or rear lot line. Any outbuilding must be approved in writing by the developer prior to beginning construction and be screened by any approved fence. Also, the sides and rood to match the house. The maximum height of walls not to exceed the fence height and the total height at top of roof not to exceed eight and one-half (8.5) feet from the ground. The only visible part of the building over the six (6) foot fence to be the roof which shall not

extend above the fence more than two and one-half (2.5) feet. The floor area of the structure shall not exceed eighty (80) square feet. Any variance from this must be approved in writing by the developer prior to beginning construction. A county building permit must be obtained before commencing construction. No metal or prefabricated buildings are permitted.

13. No satellite dish exceeding twenty-four inches (24") in diameter is allowed. No satellite dish to be installed on front of house. Property owners shall select the least conspicuous site, relative to views primarily from the street, but also from adjoining lots, for mounting any satellite dish as is practical considering such factors which include, but are not limited to, satellite location, terrain and foliage. If the developer determines that a property owner has not selected the last conspicuous site, the property owner shall remove and relocated the satellite dish.

14. No antennas, Citizens Band or otherwise, the require towers or guide wires, or are attached to the house including chimney shall be permitted on any lot in said subdivision at any time without prior written approval by the developer.

15. Mailboxes: From "Copper Sculptures" designed for Maison Bleu.

16. Roofing: All roofing shall be Weatherwood. All roofing shall be the same Architectural grade.

17. Front Main Entrance Doors: Shall be either a 6 panel, (4) lite or (6) lite door panel per attached detail and shall be made of cypress, cedar, mahogany, or another wood approved by developer. Doors will have a stained finish. All doors to be eight feet (8") in height. Front door to be approved by Architectural Review.

18. Exterior Window Shutters: Will be made in slat style per attached drawing with hinges so shutters can be operable or fixed and will be stained/painted an earthtone. Shutters will be made out of cypress, cedar, mahogany, or another wood approved by developer. Exterior of all homes should be a minimum of 75% brick. Vinyl siding will not be allowed on any of the exterior surfaces. Front shutters to be hinged working shutters.

19. Exterior to be mainly brick with hardiboard, wood, common brick, or stucco. No artificial stucco. Brick may be painted or smeared. Brick used will be common to the development and must be approved along with colors by Architectural Review. Front or side porches needing a metal roof may use tarnished copper brown metal..

20. A true copper (or copper-like) Gas Light at the front door or in courtyard must be used.

21. All windows must be vinyl. Options are 1/1, 2/2, or 4/4 grid patterns.

22. Garage ceilings may be dropped to nine feet (9'). Two (2) carriage style garage doors required on front & side entry garages.

23. Granite or higher end countertops required in kitchen.

24. No fiberglass showers allowed in master.

25. All stacks need to be on the side or back-painted the color of the roof.

26. A/C Units must be screened and not visible from the street.

27. Exterior colors must be all the same and approved by Architectural Review.

28. Minimum of nine foot (9') plate height ground to eave with exception of small shed roof coming off the house.

29. Developer must sign off on end of Construction.

See covenants for more detail on Architectural Review process.

Attachment I

MB II

Architectural Standards found in Supplemental Declaration of Covenants, Conditions and Restrictions

Which Includes Maison Bleu, Phase I Recommendations Which Is Not All Inclusive At This Time

Maison Bleu Phase II Current Architectural Standards

- EXTERIOR MATERIALS
- Brick- exterior walls with Vinyl or Hardie board accents
- Siding- Vinyl or Hardie Board – design per plans
- Cornish-Vinyl or Hardie
- Front Exterior Accents-as per plans
- Front exterior door- Wood, Fiberglass with glass
- Windows- Vinyl, Vinyl clad, metal clad, wood clad
- Shutters- 1x6 Cedar – design per plans
- Screen Porch - Treated pine or Cedar, Charcoal vinyl screen, NO ALUMINUM SCREEN.
- ROOFING
- Roof Pitch- 8/12 minimum
- Shingles-Owens Corning Dimensional or equal. Gray, brown, black or blends. NO GREEN, BLUE, RED, TAN OR WHITE SHINGLES.
- INTERIOR FINISHES
- Ceiling plate height- 9' minimum
- Vaults and Trays- As per plan
- Interior trim mouldings
- Baseboard throughout home
- Crown moulding per plans
- Door trim - 356 minimum
- Interior doors- Raised panel masonite
- Countertops/Backsplashes-Granite, quartz, ceramic tile
- Flooring- wood, engineered wood, vinyl wood, ceramic tile, carpet, stained concrete
- Water Heaters-tankless or tank
- Appliances – Gas, Electric or duel fuel
- LANDSCAPING
- Each home will be professionally landscaped
- Each home will have a minimum of 4 shrubs for every 10' of foundation frontage.
- Corner lots will have a minimum of 1 shrub for every 6' of foundation frontage facing the side street.
- One (1) oak tree to be planted on each lot in front yard set back
- All lots to be completely sodded

Maison Bleu Phase I Recommendations for Phase II 11/27/24

Material Standards

EXTERIOR MATERIALS

- All Brick- exterior walls are to match Phase I Bricks. Bricks may be painted or smeared
- Siding- No siding allowed on first floor
- Cornish- Hardie
- Front Exterior Accents-as per plans
- Front exterior door- 4 or 6 panel glass Wood front door stained to match Phase I and shall be made of Cypress, Cedar, Mahogany. NO PINE.
- Windows- Vinyl, Vinyl clad, metal clad, wood clad
- Shutters- 1x6 Cedar – design per plans
- Screen Porch - Treated pine or Cedar, Charcoal vinyl screen, NO ALUMINUM SCREEN.
- ROOFING
- Roof Pitch- 8/12 minimum
- Shingles-Atlas Pinnacle Pristine Weathered Wood or Owens Corning Dimensional equivalent. NO GREEN, BLUE, RED, TAN, WHITE or BLENDS SHINGLES.
- All stacks are to be located on the side or in the back and painted the color of the roof
- Gutters and downspouts installed on all sides upon sale of the home and are to drain into utility easement between homes
- AC units should be located at the rear of the house. If on the side they must be hidden behind a bush that will screen them.
- Back yards will be fenced. Fence may wrap around the AC unit if on the side to hide it but may not disrupt water flow off of property .

INTERIOR FINISHES

- Ceiling plate height- 9' minimum
- Vaults and Trays- As per plan
- Interior trim mouldings
- Baseboard throughout home
- Crown moulding per plans
- Door trim - 356 minimum
- Interior doors- Raised panel masonite
- Countertops/Backsplashes-Granite, Quartz, No Ceramic Tile
- Flooring- wood, engineered wood, vinyl wood, ceramic tile, carpet, No Stained Concrete
- Water Heaters-tankless or tank
- Appliances – Gas, Electric or duel fuel
- All garage doors to be painted to match trim

LANDSCAPING

- Each home will be professionally landscaped
- Each home will have a minimum of 4 shrubs for every 10' of foundation frontage.
- Corner lots will have a minimum of 1 shrub for every 6' of foundation frontage facing the side street.
- One (1) oak tree to be planted on each lot in front yard set back
- All lots to be completely sodded
- Mail Box from “Copper Sculptures” designed for Maison Bleu

Attachment J

Notable Omissions or Changes to Architectural Standards

Between

Maison Bleu, Phase I and MB II

Note: The Architectural Review Committee for MB I was never initiated by the developer nor included any homeowner to assist in review to ensure standards were maintained. This document reflects just a few notable changes or admissions from Architectural Guidelines and Standards [AGS] for both MB I and MB Phase II.

Note not all AGS were addressed				
MB Phase II AGS found in DCC&R / Nov 2024	**2015 DCC&R for MB Phase I**	**AGS for MB Phase I 2013**	**AGS for MB Phase I 2024**	**Notes**
EXTERIOR MATERIALS				
Brick- exterior walls with Vinyl or Hardie board accents	**Page 27 / Section 12.07 All Dwellings shall be brick, stone or smeared brick. no Vinyl, wood, or cementitious board siding shall be allowed**	**Page 3 /Section 19 - Exterior to be mainly brick with hardie board, wood, common brick, or stucco. No artificial stucco. brick may be painted or smeared. Brick used will be common to the development and must be approved along with colors by the AR. Front or side porches needing a metal roof may use tarnished copper colored metal.**	Same	
Siding- Vinyl or Hardie Board – design per plans	**Page 26 / section 12.07 No vinyl, wood, or cementitious board siding shall be allowed.**	**Page 4 / sec 18 - Vinyl siding will not be allowed on any of the exterior surfaces**	Same Page 3 / Sec 18	
Cornish-Vinyl or Hardie	**No Vinyl as noted in cell B5 above**	**No Vinyl as noted above**	No vinyl	
Front Exterior Accents-as per plans				
Front exterior door- Wood, Fiberglass with glass		Page 4 / Section 17 -Front Main Entrance Doors: Shall be either a 6 panel, (4) lite or (6) lite door panel per attached details and shall be made of cypress, cedar, mahogany, or another wood approved by developer. All doors are to be 8 foot (8') in height. Front door to be approved by Architectural Review.	Same Page 3 / Sec 17	
Windows- Vinyl, Vinyl clad, metal clad, wood clad		Page 4 /Section 22. All windows must be vinyl clad (or better). Options are 1/1, 2/2 or 4/4 grid patterns.	Same Page 4 /Sec 21.	
Shutters- 1x6 Cedar – design per plans		Page 4 / Sec 18 - Will be made of slat style per attached drawing with hinges so shutters can be operable or fixed.	Same Page 3 / Sec !8	
Screen Porch - Treated pine or Cedar, Charcoal vinyl screen, NO ALUMINUM SCREEN.				
ROOFING				
Roof Pitch- 8/12 minimum		**Page 3 / Sec 10 Roof pitch ten / twelve (10/12) towards street.**	**Same Page 3 / Sec 10 R**	
Shingles-Owens Corning Dimensional or equal. Gray, brown, black or blends. NO GREEN, BLUE, RED, TAN OR WHITE SHINGLES.		**Page 4 / Sec 16 - All roofing shall be WeatherWood. All roofing will be the same architectural grade**	**Same Page 3 / Sec 16 WeatherWood**	

Note: The Architectural Review Committee for MB I was never initiated by the developer nor included any homeowner to assist in review to ensure standards were maintained. This document reflects just a few notable changes or admissions from Architectural Guidelines and Standards [AGS] for both MB I and MB Phase II.

Note not all AGS were addressed				
MB Phase II AGS found in DCC&R / Nov 2024	**2015 DCC&R for MB Phase I**	**AGS for MB Phase I 2013**	**AGS for MB Phase I 2024**	**Notes**
Roof Stacks (Per MB IN AG		**Page 4 / Sec 26 -All stacks are to be located on the side or in the back away from the street and painted the color of the roof**	**Same Page 4 / Sec 25.**	
INTERIOR FINISHES				
Ceiling plate height- 9' minimum		**Page 5 / Sec 31 - Min of ten (10) footplate height to ground to leave with exception of small shed roof**	**Page 4 / Sec 28 - Changed to Min of nine (9) footplate height to ground to leave with the exception of small shed roof coming off the house**	
Vaults and Trays- As per plan				
Interior trim mouldings				
Baseboard throughout home				
Crown moulding per plans				
Door trim - 356 minimum				
Interior doors- Raised panel masonite				
Countertops/Backsplashes-Granite, quartz, ceramic tile		Page 4 / Section 23 - Granite or higher end countertops required in kitchen	Same Page 4 / Section 24	
Flooring- wood, engineered wood, vinyl wood, ceramic tile, carpet, stained concrete		**Page 4 / section 28 - Stained floors may only be used on patio / outside area, or as approved by AR**	**Removed from 2024 AG**	
Water Heaters-tankless or tank				
Appliances – Gas, Electric or dual fuel				
Fiberglass Showers (Per MB IN AG)		**Page 4 / Sec 25 - No fiberglass showers allowed**	**Page 4 / Sec 24 No fiberglass showeres allowed in Master**	
GARAGE CEILING and DOORS		Page 4 / Sec 23 - Garage ceiling may be dropped to nine (9) feet. Two carriage style garage doors required on front and side entry.	Same Page 3 / Sec 22	
LANDSCAPING				
Each home will be professionally landscaped				
Each home will have a minimum of 4 shrubs for every 10' of foundation frontage.				
Corner lots will have a minimum of 1 shrub for every 6' of foundation frontage facing the side street.				
One (1) oak tree to be planted on each lot in front yard setback				**Developers Agreement notes 2 trees**

Note: The Architectural Review Committee for MB I was never initiated by the developer nor included any homeowner to assist in review to ensure standards were maintained. This document reflects just a few notable changes or admissions from Architectural Guidelines and Standards [AGS] for both MB I and MB Phase II.

Note not all AGS were addressed				
MB Phase II AGS found in DCC&R / Nov 2024	**2015 DCC&R for MB Phase I**	**AGS for MB Phase I 2013**	**AGS for MB Phase I 2024**	**Notes**
All lots to be completely sodded				
Other ITEMS TO ADDRESS				
House Square Footage **Page 4 / Section 8 Supplemental Declaration of Covenants, Conditions and Restrictions for Maison Bleu, Phase II** House Square Footage - Notwithstanding anything to the contrary, each Dwelling constructed on the Property (being the Lots of Maison Bleu, Phase II) shall have the following square footage: exclusive of porches and garages, the heated and/or cooled living area of each Dwelling , main house or residential structure constructed shall contain at least **One Thousand Eight Hundred (1,800)** square feet.	**Page 26 / Sec 12.04 - Each dwelling constructed shall have the following square footage: Exclusive of porches and garages, the heated and /or cooled living area of each dwelling, main house or residential structure constructed shall contain at least One Thousand Nine Hundred (1900) square feet, and at least One Thousand Five Hundred (1500) square feet of applicable minimum square feet must be contained on the ground floor level for Dwelling or more than (1) story.**	**Page 3 / Sec 10 Excerpt - It being understood that no house will have less than Eighteen Hundred (1800) square feet of livable floor area (Heated). No house shall have a roof pitch less than ten / twelve (10/12) towards street.**	**Same Page 3 / Sec 10 Exception is it states, Eighteen hundred (1,800) square feet of livible floor (heated). Roof pitch ten / twelve (10/12) towards street.**	
Mail Box	**Page 27/ Sec 12.09 - All mailboxes in the subdivision shall be identical. The Architectural Review Committee will provide the owner with the information etc.**	Page 4 / Section 15 -Mailbox from Copper Sculptures designed for Maison Bleu	Same Page 3 / Sec 15	
Courtyards	**Page 26 / Sec 12.05 - Unless waived by the Architectural Review Committee. Each Dwelling shall have a courtyard which will be constructed pursuant to specifications provided by the Architectural review Committee.**	**Page 4 / Section 20 - Every House must have a front courtyard using a combination of brick, stone, or wrought iron. Gate must be wrought iron.**	**Removed from 2024 AG**	
Gas Light		Page 4 / Section 21 - A true copper gas light at the front door or in the courtyard must be used	Same Page 3 / Sec 20	3 houses in MB I have gas lights
AC Units	**Page 27 / Sec 12.07 - Each owner shall provide a screen storage area for trash or garbage receptacles, fuel tanks or similar storage receptacles, electric and gas meters, air conditioning equipment, closhlines and other similar or unsightly object in order to conceal such objects from view of the road or adjacent Lot and the Commons area.**	**Page 4 / Section 27 - AC Units must be screened and not visible from the street**	**Same Page 4 / Sec 26**	Some of the new houses built in MB I have AC Units exposed on the side
Developer Must Sign off		Page 5 / Sec 33 - Developer must sign off on end of construction	Same Page 4 / Sec 29	They never have
Architectural Review Committee MB I **Never Formed**	**Page 21 / Sec 10.01 - There is hereby established an Architectural Review Committee to be known as Maison Bleu Architectural Review Committee etc.**	Page 5 / Sec 33 Developer will sign off on end Construction	Same Page 4 / sec 29	Never formed
Fences	**Page 27 / Sec 12.08 - All fences shall be constructed pursuant to the design and specifications established by the Architectural Review Committee.**	Page 2 / sec 9 - Lots along the pond will have wrought iron fences. Other fences will be provided by Jeffcoat.	Same but Jeffcoat removed	
ADDITIONAL STANDARDS TO CONSIDER FOR MB II				
MB II homes should have the same look and feel as Maison Bleu, Phase I				
Bricks	**MBI CC&R Page 27 / Section 12.07 All Dwellings shall be brick, stone or smeared brick. no Vinyl, wood, or cementitious board siding shall be allowed**			
Bricks	The homes first floor will be 100% brick			

Note: The Architectural Review Committee for MB I was never initiated by the developer nor included any homeowner to assist in review to ensure standards were maintained. This document reflects just a few notable changes or admissions from Architectural Guidelines and Standards [AGS] for both MB I and MB Phase II.

Note not all AGS were addressed				
MB Phase II AGS found in DCC&R / Nov 2024	**2015 DCC&R for MB Phase I**	**AGS for MB Phase I 2013**	**AGS for MB Phase I 2024**	**Notes**
Brick Color	The same Brick and Grout should be considered with modifications as per Maison Bleu Phase I Filed DCC&R			
Brick Soldier Course	Bricks should include a Soldier course at the eaves and soffit, above garage doors, arches and windows			
Brick Rowlock Course	All windows should include a rowlock course on the base			
Brick facade / wall height and floor to ceiling height	Confirm ceiling plate (10ft) with Maison Bleu 2013 Architectural Standards. It was changed to 9 ft in 2024			
Siding	**Page 26 / section 12.07 No vinyl, wood, or cementitious board siding shall be allowed.**			
Siding Second Story	The use of siding should also limited to dormers on the front of the house and side / second story			
Windows	All windows should be of the same design as currently used in Phase I			
Timber Lintals	Timbers lentals should be minimized as a design element and replace with brick above Garages			
Roof Pitch	Roof Pitch should conform to the 2013 Maison Bleu Architectural Guideline 2013 which is 10/12			
Garage Doors and Ceilings	Garage doors should conform to the Maison Bleu Architectural Guidelines for both 2013 and 2024 which state 2 Carriage door styles should be used. All garage doors should include exterior black hardware and door painted to match trim or compliment brick (not white).			
Gutters	Gutters to be required with downspouts positioned into water easement / french drain to eliminate surface build up or pooling water. Gutters are to be dark bronze or match the trim of the house			
Shutters	Shutters per Maison Bleu 2024 AGS with operable hardware & shutter dogs			
Front Column Timbers	Front Columns on porches are typically 10x10 or 12x12 and are to be left natural and exposed or to be stain the recommended color of the Maison Bleu Architectural Review Committee.			
Garage Light Sconces	The last builder began to install gooseneck wall sconces with placement typically above the garage doors. These have an automatic function to turn them on at dark. Great security			
AC Units	AC Units on the side of the house are to be hidden per the Maison Bleu DCC&R in addition to the Architectural Standards for 2013 and 2024			
Courtyards	**Maison Bleu DCC&R Page 26 / Sec 12.05 - Unless waived by the Architectural Review Committee. Each Dwelling shall have a courtyard which will be constructed pursuant to specifications provided by the Architectural review Committee.**			
Showers	No fiberglass showers in the Master Bedroom			

Technical Memorandum

Date: December 5, 2024

To: Zoning Board
City of Ridgeland, Mississippi

From: Jere (Trey) Hess
Resident, Phase I of Maison Bleu Subdivision
110 Bleu Drive, Ridgeland, Mississippi

Re: Petition and Application for Dimensional Variance
Petitioner: SCM Development, LLC
Proposed Phase II of Maison Bleu Subdivision

If you will recall from the Minutes of the Zoning Board for Thursday, April 18, 2024, the Zoning Board unanimous approved a motion to table the petition from SCM Development, LLC for a dimensional variance "contingent upon Petitioner addressing issues in Phase I which are listed in the City of Ridgeland's March 22, 2024, correspondence (Attachment C to the Technical Memorandum which is 'Exhibit C' to these minutes." In the letter, the City stated that "there are still some outstanding items, errors, omissions, code and/or ordinance violations that must be addressed before your project can move forward with our approval process." Of the 22 items listed in the March 22, 2024 letter, at least 8 refer to drainage, stormwater, detention, or other concerns that must be addressed to demonstrate that compliance with Section 600.08 of the Zoning Ordinance. Among the listed items, #18 included a stipulation to provide a **development agreement** that identifies use of Public right-of-way and required maintenance and other items as may be necessary (drainage, phasing, design/architectural standards, traffic control, construction traffic management, lighting, HOA transitions, street cleaning, and litter control, hours of construction/noise, detention protection/maintenance, final surfacing, multi-use trail, completion of Phase I items not yet completed, etc.). Attached you will find a copy of the latest draft Development Agreement (**Exhibit A**).

It should be noted that the Petitioner has not fulfilled his obligations for the orderly transition of powers of Homeowner's Association (HOA) to homeowner's within Maison Bleu Phase I Subdivision. Exhibit B includes our letter to SCM Development, LLC and his attorney's response to questions we had relative to HOA transition. Among the most basic questions was a request for his Federal Tax ID Number for the HOA that he has created and controls so we can open up a simple checking account. More complex questions were also asked, particularly related to the order transfer of power.

Most important to me is the fact that SCM Development has transferred ownership of the detention pond to the single member (Matt Herfurth) Maison Bleu Homeowners Association Inc. with an expectation that the homeowners (who currently have no voting rights or power) are to accept certain stipulations, responsibilities, and costs in the draft Development Agreement without any current voting rights or representation whatsoever.

"Exhibit B"

It should be noted that draft Development Agreement includes the following stipulations and responsibilities of the Maison Bleu Homeowners Association:

3.b. HOA. The existing Maison Bleu Homeowners Association, Inc. ("HOA") shall serve as the homeowner's association for both Phase I and Phase II, subject however to the terms and conditions of this Agreement and the Phase II Supplemental Covenants.

3.c. Detention Pond Maintenance. The Private Detention Area in Phase I was built by SCM during the development of Phase I and shall be common area for the Maison Bleu subdivision, serving both Phase I and Phase II.... The HOA shall be responsible for maintaining the Private Detention Area in such manner to maintain drainage in accordance with the MDEQ Stormwater Pollution Prevention Plan. For the avoidance of doubt, MBII shall have no liability, duty, or obligation whatsoever arising from or related to the Detention Area (including the detention pond), including without limitation past or future construction or maintenance of the Detention Area; provided, however, that MBII shall be responsible for repairing any damage to the Detention Area caused by MBII's development work on Phase II and shall implement control measures to prevent any debris and sediment generated by construction of Phase II from depositing into the Detention Area.

3.e. Entrance and Other Phase I Common Areas. The HOA, at its sole cost and expense, shall maintain the neighborhood entrance feature at the intersection of Bleu Drive and Jackson Street and any other common areas in Phase I or Phase II. For the avoidance of doubt, MBII shall have no liability, duty, or obligation whatsoever arising from or related to any common areas in Phase I, except that MBII shall be responsible for repairing any damage that it causes to common areas in Phase I.

3.f. Mutual Indemnification. [ONLY INCLUDES SCM AND MBII LANGUAGE]

FINDINGS AND RECOMMENDATION

Nowhere within the draft Development Agreement is there a signature line for a duly elected representative of the HOA; yet, it is very clear from the stipulations above and probably throughout the remaining document that the HOA is being named as a responsible party by the parties of the draft Development Agreement, which are SCM Development, LLC, MBII, LLC and The City of Ridgeland, a Mississippi municipality. As a resident of the City of Ridgeland, I am hereby voicing my concern that the City will be executing an unwise agreement without a duly elected representative of the owner of the detention pond being added as a party to the draft Development Agreement. I, therefore, recommend that the Zoning Board approve the petition for dimensional variance with the following conditions:

(1) Maison Bleu Homeowners Association, Inc. (HOA) hold a meeting for the transition of power and authority of the HOA to duly elected representatives with 60 days of today's date, December 5, 2024.

(2) Maison Bleu Homeowners Association, Inc. (HOA) be a party to the draft Development Agreement for Maison Bleu Phase II development.

EXHIBIT A

DEVELOPMENT AGREEMENT

(Maison Bleu Development)

This Development Agreement ("Agreement") is entered into as of the date last signed below ("Effective Date"), by and between **SCM Development, LLC, a Mississippi limited liability company** ("SCM"), **MBII Developers, LLC, a Mississippi limited liability company** ("MBII"), and **The City of Ridgeland, a Mississippi municipality** ("City").

WHEREAS, SCM is the developer of Maison Bleu Subdivision, Phase I ("Phase I"), which is depicted on the subdivision plat recorded in Plat Book F at Slide 14A of the Madison County land records ("Phase I Plat");

WHEREAS, SCM owns the land adjacent to the northern boundary line of Phase I and desires to sell such adjacent land to MBII;

WHEREAS, MBII desires to purchase such adjacent land from SCM for the purpose of developing Phase II of the Maison Bleu Subdivision ("Phase II") in material conformity with the draft preliminary plat attached hereto as **Exhibit "A"** ("Phase II Plat");

WHEREAS, all of the lots in Phase I have been sold to and are now occupied by residential owners, and SCM has completed all development work in Phase I;

WHEREAS, MBII intends to acquire the adjacent land and commence development work on Phase II;

WHEREAS, the City has made this Development Agreement a condition to approval of the preliminary plat and construction plans for Phase II ("Construction Plans");

WHEREAS, in order to coordinate the completion of Phase I and Phase II, to avoid repeating problems that were encountered during the development of Phase I, to avoid future disputes, to protect the property values of the residents of Maison Bleu, to protect MBII's future investment costs and efforts in developing Phase II, to generally benefit the residents of the developments and the citizens of the City, and to obtain the City's approval of Phase II, SCM and MBII hereby desire to provide assurances related to the development of Phase I and Phase II.

NOW THEREFORE, for and in consideration of the mutual benefits and the respective obligations contained herein, and other good and valuable consideration, the receipt and sufficiency of which are hereby acknowledged, the undersigned parties agree as follows:

1. **Completion of Phase I**. The City acknowledges and agrees that SCM has completed, to the satisfaction and approval of the City, the development work for Phase I that is specified in the letter dated May 19, 2023, titled "Maison Bleu" from the City's attorney and addressed to SCM, a copy of which is attached hereto as **Exhibit "B"**. For the avoidance of doubt, MBII shall have no liability, duty, or obligation whatsoever arising from or related to Phase I, including without limitation past or future development work on Phase I.

2. **Development of Phase II**. The development of Phase II shall comply with the following terms and conditions:

a. Phasing. Phase II is the second and final phase of Maison Bleu. MBII will develop Phase II at one time, not in multiple phases.

b. Mitigation of Construction Impacts.

i. Construction Access and Traffic Management. SCM, for the benefit of itself and its successors in title (including MBII), has obtained an Easement Agreement from Litchfield 588-B, LLC, the owner of the property lying between Maison Bleu and Century Place road, which provides a thirty (30) foot wide construction access easement northward from Phase II to Century Place road ("Construction Easement") and fifteen (15) foot wide utility easement for the installation of a water line northward from Phase II to the main water line located along Century Place ("Waterline Easement"). The Construction Easement and Waterline Easement are depicted on the attached Phase II Plat. All construction traffic related to the development of Phase II shall be limited solely to the Construction Easement. In order to protect the homeowners in Phase I, no Phase II construction traffic will travel through the existing Phase I area (including along Bleu Drive, Salvo Drive, or De Young Drive), and all construction traffic shall be limited to the hours of 7:00 am through 6:00 pm, Monday through Saturday, but with extended hours through 7:00pm during daylight savings time. MBII will construct a temporary barricade running east to west along the boundary line between Phase II and Phase I in order to prevent construction traffic and litter from traveling through Phase I.

ii. Litter and Erosion Control. MBII will monitor the Phase II construction site and area adjacent to the temporary barricade between Phase I and Phase II, and will promptly cleanup any construction litter that passes the barricade onto any part of Phase I. MBII will implement erosion control measures to prevent any erosion sediment from depositing onto of any Phase I property or any other adjacent property. Upon completion of the development construction and prior to recording of the final Plat of Phase II, MBII will place wattles at all curb inlets to prevent silt from entering storm drain inlets. During the home building phase, any homebuilders will monitor and clean the streets as needed, will implement erosion control measures such as silt fencing in order to prevent mud from entering the streets, and will be responsible for pickup and haul away of any construction debris and litter.

c. Secondary Water Line. As required by the City of Ridgeland, the fifteen (15) foot wide Waterline Easement has been obtained in the area depicted on **Exhibit "A"** to allow for installation of a secondary water line running northward from Phase II to the existing main waterline located along Century Place. The Waterline Easement connects to an additional utility easement located between Lots 24 and 25 of Phase II as shown on the Phase II Plat.

d. Retaining Wall and Drainage.

i. Retaining Wall. MBII will build a retaining wall running north-south along the rear boundary lines of Lots 13 through 24 of Phase II. Exact retaining wall plans will be determined during construction and stamped engineering plans for the wall will be provided to the City of Ridgeland at that time. The design and construction of the retaining wall will include a drainage system designed to capture and properly direct the drainage of water flowing from the adjacent properties to the east. This drainage system will include at least five (5) catch basins which drain into drain pipes located in the private drainage easements (described below). Water captured in the wall's catch basins will be directed to flow into the private drainage easements and from there will flow into the master storm drainage system and ultimately into the Private Detention Area shown on the Phase I Plat. The covenants for Phase II will require the subject Lot owners to maintain the retaining wall as needed to maintain proper functioning of the wall and the drainage systems incorporated into the wall.

ii. Private Drainage Easements. All Lots located east of DeYoung Drive or north of Bleu Drive will be subject to five (5) foot wide private drainage easements centered on the boundary lines between each Lot (with two and a half (2 ½) feet of such easement located on each Lot) as shown on the Phase II Plat. In addition, all Lots along the eastern boundary line of Phase II are subject to a fifteen (15) foot wide private drainage easement running along the rear boundary lines of such Lots as shown on the Phase II Plat. The covenants for Phase II will require the subject Lot owners to maintain the private drainage easements as needed to maintain proper drainage of stormwater and groundwater and will direct that the responsibility and cost of maintenance of the private drainage easements shall be borne by the subject Lot owners.

e. Setbacks. The Phase II Covenants and Phase II Plat will provide that the setbacks for all lots will be as follows: front - fifteen (15) feet; side – five (5) feet; and, rear – ten (10) feet, except that Lots 13 through 24 (all lots along the eastern boundary line of Phase II) will be subject to a fifteen (15) foot rear setback to facilitate the drainage plan.

f. Utility Easements. All required utility easements will be shown on the Phase II Plat prior to the City's approval of the final Plat. The utility easement previously located between Lots 53 and 54 has been moved to the common area north of Lot 53 as shown on the updated Phase II Plat. Ownership of all easements will be clearly specified on the final Plat. The City's approval of the final plat shall be deemed the City's acceptance of the sewer, water, and other utility easements and improvements dedicated to the City.

g. Final Surfacing of Streets. MBII will install the final wearing surface of the roads in Phase II at such time as dwellings have been constructed on eighty percent (80%) of the Phase II Lots. Notwithstanding the foregoing, MBII reserves the right to request that the installation of the final wearing surface be delayed for certain reasons, and the City reserves the right to approve or disapprove of such request. The City will accept dedication of the roads as public roads if MBII builds the roads in conformity with the approved construction plans and applicable City ordinances. MBII will warrant the roads for one (1) year against material defects caused by defective workmanship or defective materials.

h. Lighting. MBII will install street lighting in Phase II in a manner reasonably consistent with the street lighting in Phase I and in accordance with a final lighting plan to be shown on Entergy's electrical layout plan, which will be submitted to the City of Ridgeland before installation. Upon approval of the final Plat of the Development and after MBII completes the transfer process with Entergy's billing department, the City will assume responsibility for paying for usage of the street lighting.

i. Phase II Covenants.

i. Annexation; Supplemental Covenants. Subject to the terms and conditions of this Agreement and the Phase II Supplemental Covenants, Phase II will be annexed into the Maison Bleu development. Phase II will be governed by the existing Maison Bleu covenants, except as modified by the proposed Phase II Supplemental Covenants, a draft of which is attached hereto as **Exhibit "C"**. The final recorded version of the Phase II Supplemental Covenants will be materially consistent with the terms and conditions of this Agreement. (The existing covenants and Phase II Supplemental Covenants are referred to herein as the "Phase II Covenants").

ii. Trees. The Phase II Covenants shall require all Lots in Phase II to contain a minimum of two (2) trees, each having a minimum caliper of two (2) inches in diameter, either through the preservation of existing trees of the planting of new trees prior to the issuance of a Certificate of Occupancy.

iii. Design and Architectural Standards. Any homebuilder's design and construction of any dwelling shall comply with all applicable building codes and ordinances of the City and, as provided for in Article Six of the Covenants, is further subject to the design guidelines set forth in the Covenants and review and approval by the Architectural Review Committee of the homeowner's association. Before or after the City's approval of the final Plat, any homebuilder who intends to build dwellings in Phase II may submit its an architectural pattern book showing its conceptual elevation drawings and general home design scheme to the City for review and preliminary approval, in such form and substance as desired by the City. If the City (through its Mayor and Board of Aldermen) gives approval of such builder's architectural pattern book as recorded in the minutes of a board meeting of the Mayor and Board of Alderman, then the City shall not thereafter have the right to disapprove such builder's construction permit application for homes in the Phase II so long as the homebuilder's plans submitted with the permit application comply with the approved architectural pattern book, the design guidelines set forth in the Covenants, and all applicable ordinances relating to the issuance of a building permit. The City reserves the right to approve any deviations from the pattern book.

iv. Rental Terms. As required by the City, the Covenants will include verbatim the leasing restrictions set forth in Section 4 of the attached Phase II Supplemental Covenants.

3. **Coordination of Phase I and Phase II**. SCM and MBII agree to the following terms and conditions applicable to the coordination of Phase I and Phase II:

a. Declarant's Rights and Obligations. SCM shall maintain the declarant's rights and obligations with respect to Phase I. Upon MBII's acquisition of the Phase II land from SCM, SCM shall assign and MBII shall assume the declarant's rights and obligations with respect to Phase II.

b. HOA. The existing Maison Bleu Homeowners Association, Inc. ("HOA") shall serve as the homeowner's association for both Phase I and Phase II, subject however to the terms and conditions of this Agreement and the Phase II Supplemental Covenants. The governance of the HOA shall be in accordance with the Bylaws of Maison Bleu Homeowners Association, Inc. executed by SCM on April 26, 2024. With respect to Phase I, SCM shall cause the HOA to be turned over to the owners of Phase I Lots immediately following SCM's conveyance of the Phase II property to MBII. Notwithstanding anything to the contrary, the HOA and its Board of Directors shall have authority, rights, duties, and obligations for Phase I, and only for Phase I, of Maison Bleu (and not Phase II) until such time as MBII executes an assignment of declarant's rights assigning unto the HOA its declarant's rights and obligations with respect to Phase II. MBII, or its successors or assigns, shall execute such assignment upon the earlier of the following: a) thirty (30) days after a certificate of occupancy is issued for the last dwelling built in Phase II, or b) three (3) years after the effective date of the Phase II Covenants. Upon such assignment of declarant's rights and obligations with respect to Phase II, the HOA shall have the authority and responsibility for the governance of Phase II in accordance with the Covenants and Bylaws in the same manner as it does with respect to Phase I. For the avoidance of doubt, with respect to Phase II, the HOA shall have no authority over Phase II (including the authority to levy assessments) until it receives said assignment of declarant's rights and obligations for Phase II. Notwithstanding anything to the contrary, prior to the turnover of Phase II to the HOA: a) MBII or any builder shall pay the HOA a common area maintenance contribution fee of $100.00 per calendar year for each Phase II Lot owned by MBII or any such builder, and b) any subsequent owner of a Phase II Lot (i.e., an owner that is not a developer or builder) shall pay the HOA an annual common area maintenance contribution fee equal to the same amount as the annual maintenance assessment applicable to a Phase I Lot. Such common area maintenance contribution fees shall be due and payable on January 1 of each year beginning January 1, 2025. The HOA shall use such common area maintenance contribution fees for the maintenance, repair and upkeep of the common areas. After the turnover of Phase II to the HOA, the Phase II Lots shall be subject to the same assessments as Phase I Lots. The final Phase II Supplemental Covenants shall contain terms and conditions consistent with this Section. SCM and MBII will cooperate in good faith and will execute any documents reasonably necessary to effectuate the intent of this Section.

c. Detention Pond Maintenance. The Private Detention Area in Phase I was built by SCM during the development of Phase I and shall be common area of the Maison Bleu subdivision, serving both Phase I and Phase II. Title to the Private Detention Area, which includes the detention pond, was conveyed by SCM to the HOA by a Quitclaim Deed dated August 17, 2023, recorded in Book 4362, Page 168, in the office of the Chancery Clerk of Madison County, Mississippi. The HOA shall be responsible for maintaining the Private Detention Area in such manner to maintain drainage in accordance with the MDEQ approved Stormwater Pollution Prevention Plan. For the avoidance of doubt, MBII shall have no liability, duty, or obligation whatsoever arising from or related to the Detention Area (including the detention pond), including without limitation past or

future construction or maintenance of the Detention Area; provided, however, that MBII shall be responsible for repairing any damage to the Detention Area caused by MBII's development work on Phase II and shall implement control measures to prevent any debris and sediment generated by construction of Phase II from depositing into the Detention Area.

d. Walking Trail. No walking trail has been built in Phase I or Phase II. MBII does not intend to build any walking trail and shall have no liability, duty, or obligation whatsoever arising from or related to any walking trails (whether in Phase I or II), including without limitation past or future construction or maintenance of any walking trails.

e. Entrance and Other Phase I Common Areas. The HOA, at its sole cost and expense, shall maintain the neighborhood entrance feature at the intersection of Bleu Drive and Jackson Street and any other common areas in Phase I or Phase II. For the avoidance of doubt, MBII shall have no liability, duty, or obligation whatsoever arising from or related to any common areas in Phase I, except that MBII shall be responsible for repairing any damage that it causes to common areas in Phase I.

f. Mutual Indemnification.

i. Indemnity for Phase I. SCM shall indemnify, defend, and hold MBII (and its members, managers, employees, subcontractors, agents, and successors and assigns) harmless from and against any and all liabilities, claims, suits, judgments, damages, or losses arising from or related to the development of Phase I, including but not limited to any acts or omissions of SCM (or its members, managers, employees, subcontractors, agents, and successors and assigns) in connection with Phase I, the quality of the workmanship or materials used in Phase I, or any now existing or hereafter arising condition of, on or affecting Phase I (for example, drainage conditions and road quality conditions).

ii. Indemnity for Phase II. MBII shall indemnify, defend, and hold SCM (and its members, managers, employees, subcontractors, agents, and successors and assigns) harmless from and against any and all liabilities, claims, suits, judgments, damages, or losses arising from or related to the development of Phase II, including but not limited to any acts or omissions of MBII (or its members, managers, employees, subcontractors, agents, and successors and assigns) in connection with Phase II, the quality of the workmanship or materials used in Phase II, or any now existing or hereafter arising condition of, on or affecting Phase II (for example, drainage conditions and road quality conditions).

4. **Security and Warranty; Term.** In accordance with Articles 303.04 and 601 of the City's Subdivision Regulations, as a condition to the City's approval of the final Plat, MBII will (a) provide the City with a letter of credit in an amount equal to 1.5 times the estimated cost of the final wearing surface of the roads in Phase II and (b) execute the One Year Warranty in the form required by Article 601 of the Subdivision Regulations. The City must be notified in writing at least sixty (60) days prior to the release of the line of credit. MBII must renew the letter of credit as long as needed to comply with this Agreement and will provide the City with a copy of any such

renewals. The letter of credit will be cancelled and released upon the expiration of the One Year Warranty. The One Year Warranty shall commence upon the City's approval of the final Plat. MBII's obligations under this Agreement shall expire automatically at such time as the One Year Warranty expires. In addition to any other remedies available to the City, if MBII defaults on the performance of its obligations under this Agreement or the One Year Warranty, then the City shall notify MBII in writing of such default, which notice shall identify such default in reasonable detail and provide documentation thereof and state that the City intends to draw on the letter of credit. MBII shall have thirty (30) days after receipt of such notice to cure such default. If MBII fails to cure the default within such time period, then the City may draw on the letter of credit in an amount equal to the cost incurred to cure such default.

5. **General Terms**.

a. Entire Agreement. This Agreement and the exhibits attached hereto contain the entire agreement between the parties, and no written or oral promise, representation, warranty or covenant not included in this Agreement or any such referenced agreements has been or is relied upon by either party.

b. Counterparts. This Agreement shall be executed in any number of counterparts which together shall constitute the agreement of the parties.

c. Successors. This Agreement and the terms and provisions hereof shall inure to the benefit and be binding upon the parties hereto and their respective heirs, executors, personal representatives, successors and assigns whenever the context so requires or permits, including any future owners of any part of the subject property who own with the intent to develop such property into a residential development.

d. Severability. If any provisions of this Agreement are held to be illegal, invalid or unenforceable under present or future laws, such provisions shall be fully severable, and this Agreement shall be construed and enforced as if such illegal, invalid or unenforceable provision had never comprised a part of this Agreement.

e. Default and Remedies. In addition to the City's remedy of drawing on the Letter of Credit under Section 4, in the event a party defaults on the performance of its obligations under this Agreement and fails to cure such default within thirty (30) days after receiving written notice of such default from the other party, then the other party may seek to enforce this Agreement by suit for specific performance.

f. Waiver. Any waiver by a party hereto of any breach of this Agreement of any kind or character whatsoever by the other party, whether such waiver is direct or implied, shall not be construed as a continuing waiver or consent to any subsequent breach of this Agreement on the part of the other party.

g. Authority. The undersigned individuals represent and warrant that they have been duly authorized to sign on behalf of the entity parties to this Agreement.

h. Term. If MBII does not acquire and undertake the development of Phase II, then this Agreement shall be null and void. This Agreement shall expire automatically at such time as the One Year Warranty expires.

IN WITNESS WHEREOF, the parties hereto have duly executed this Agreement as of the Effective Date.

[Signatures appear on the following pages]

MBII Developers, LLC
a Mississippi limited liability company

By:_____ Date: _____

Name: _____

Title: _____

STATE OF _____
COUNTY OF _____

Personally appeared before me, the undersigned authority in and for the said county and state, on this _____ day of _____, 2024, within my jurisdiction, the within named _____, who proved to me on the basis of satisfactory evidence to be the person(s) whose name(s) is/are subscribed in the above and foregoing instrument and acknowledged that he/she/they executed the same in his/her/their representative capacity(ies), and that by his/her/their signature(s) on the instrument, and as the act and deed of the person(s) or entity(ies) upon behalf of which he/she/they acted, executed the above and foregoing instrument, after first having been duly authorized so to do.

_____
Notary Public
Printed Name: _____

My commission expires: _____

(Affix official seal, if applicable)

(*Signature page to Development Agreement – Maison Bleu*)

SCM Development, LLC
a Mississippi limited liability company

By:_____ Date: _____

Name: _____

Title: _____

STATE OF _____
COUNTY OF _____

Personally appeared before me, the undersigned authority in and for the said county and state, on this _____ day of _____, 2024, within my jurisdiction, the within named _____, who proved to me on the basis of satisfactory evidence to be the person(s) whose name(s) is/are subscribed in the above and foregoing instrument and acknowledged that he/she/they executed the same in his/her/their representative capacity(ies), and that by his/her/their signature(s) on the instrument, and as the act and deed of the person(s) or entity(ies) upon behalf of which he/she/they acted, executed the above and foregoing instrument, after first having been duly authorized so to do.

_____
Notary Public
Printed Name: _____

My commission expires: _____

(Affix official seal, if applicable)

(*Signature page to Development Agreement – Maison Bleu*)

The City of Ridgeland

By:_____ Date: _____

Name: _____

Title: _____

STATE OF _____
COUNTY OF _____

Personally appeared before me, the undersigned authority in and for the said county and state, on this _____ day of _____, 2024, within my jurisdiction, the within named _____, who proved to me on the basis of satisfactory evidence to be the person(s) whose name(s) is/are subscribed in the above and foregoing instrument and acknowledged that he/she/they executed the same in his/her/their representative capacity(ies), and that by his/her/their signature(s) on the instrument, and as the act and deed of the person(s) or entity(ies) upon behalf of which he/she/they acted, executed the above and foregoing instrument, after first having been duly authorized so to do.

_____
Notary Public
Printed Name: _____

My commission expires: _____

(Affix official seal, if applicable)

(*Signature page to Development Agreement – Maison Bleu*)

EXHIBIT A
PHASE II PLAT

(ATTACHED)

EXHIBIT B
LETTER DATED MAY 19, 2023
FROM CITY ATTORNEY TO SCM

(ATTACHED)

EXHIBIT C
PHASE II SUPPLEMENTAL COVENANTS

(ATTACHED)

EXHIBIT B

COPELAND
COOK
TAYLOR &
BUSH

Walker R. Gibson
Direct Dial: 601-427-1320
Email: wgibson@cctb.com

October 8, 2024

Mr. Matthew Herfurth
Managing Member
SCM Development, LLC
108 Aerosmith Drive
Richland, MS 39218

Re: Maison Bleu Homeowners, Inc. Association

Dear Mr. Herfurth:

Phase I homeowners have expressed the following concerns and specific actions that they deem necessary for completion prior to and/or at the first meeting of the Association as required by the Declaration of Covenants and Bylaws. Below are questions from homeowners that we respectfully request you provide a written response to my attention.

As you know, SCM Development, LLC is the "Declarant" in the existing "Declaration of Covenants, Conditions, and Restrictions for Maison Bleu Subdivision Phase I." Under Article I Section 1.01(i):

a. "Declarant shall mean SCM Development, LLC, a Mississippi limited liability company and its successors and assigns. The designation of any successor to or assignee of the Declarant may be made by a written instrument making such designation or assignment filed of record in the land records of Madison County, Mississippi."

QUESTION #1 – Will you confirm that you, as managing member of SCM Development, LLC, will file a written instrument in the land records of Madison County, Mississippi making Maison Bleu Homeowners Association, Inc. the assignee of the Declarant? If so, when do you plan to do so?

Phase II of Maison Bleu is the roughly 15.4 acre adjoining property (Parcel #072D-19D-076/03.00) to Maison Bleu Phase I and is currently owned by SCM Development, LLC.

QUESTION #2 - Will you confirm that, as managing member of SCM Development, LLC, you will execute and record a written "Declaration of Covenants, Conditions, and Restrictions" that, at a minimum, are consistent with the "Declaration of Covenants, Conditions, and Restrictions for Maison Bleu

Subdivision Phase I" prior to any sale of Parcel #072D-19D-076/03.00 or the sale of SCM Development, LLC to any party?

It is our understanding that you, as a member of the Association and as a member under "Declaration of Covenants, Conditions, and Restrictions for Maison Bleu Subdivision Phase I" wish to hold the first Homeowner Association meeting as part of a transition and consistent with the existing Phase I Declaration of Covenants and consistent with the existing Bylaws of Association.

QUESTION #3 – Will you confirm that you, as a member of the Association and member under the Declaration of Covenants, will call the first Homeowners Association Meeting prior to the sale of Parcel #072D-19D-076/03.00 or the sale of SCM Development, LLC to any party?

QUESTION #4 - Will you confirm that you, as a member of the Association and member under the Declaration of Covenants, will follow all procedural notice requirement for the first Homeowners Association Meeting as stipulated in the Bylaws of the Association and Declaration of Covenants and at that first meeting you acting as Co-Director will follow Robert's Rules of Order with the following actions:

a) Call the meeting to Order;
b) Assign an individual to record minutes of the meeting;
c) Open the floor for nominations of four (4) current homeowners in Maison Bleu Phase I subdivision to serve as Directors under the existing By-Laws of the Association and the existing Declaration of Covenants, Conditions, and Restrictions for Maison Bleu Subdivision Phase I;
d) Close the floor for nominations;
e) If only 4 current homeowners are nominated, approve, as Director, by acclimation;
f) If more than 4 current homeowners are nominated, call for a vote of 4;
g) Tally the vote; and
h) Approve the 4 current homeowners to also serve as Directors on the Association and Directors under the Declaration of Covenants?

It is our understanding that you, as a member of the Association and as a member under "Declaration of Covenants, Conditions, and Restrictions for Maison Bleu Subdivision Phase I" intend to transfer any and all power and duties, to the newly approved Board of Directors and with no further interest in Phase I Maison Bleu subdivision, its Declaration of Covenants, and its Bylaws.

QUESTION #5 – Will you confirm that you will resign as a member of the Association and as a member under "Declaration of Covenants, Conditions, and Restrictions for Maison Bleu Subdivision Phase I" at the first Homeowners Association meeting and after you as Co-Director have approved the 4 current homeowners to also serve as Directors for the Association and Directors under the Declaration of Covenants?

It appears that Maison Bleu Homeowners Association, Inc. is registered with the Secretary of State under Business ID: 1388413 with formation documents listing the following:

a. Incorporator: Matt Herfurth, 108 Aerosmith Drive, Richland, MS 39218, mherfurth@ssbeverages.com with an NAICS Code of 813990

QUESTION #6 – Will you provide a copy of the Federal Tax Returns for 2023 filed on behalf of the "Association" to aid in future tax preparations by the HOA?

As you know, a private drainage easement is a legal agreement that grants a property owner the right to direct stormwater or surface water drainage across an adjacent property. In the March 22, 2024 letter from the City of Ridgeland to Alford and Associates regarding Maison Bleu Phase II, the City requested that "a private drainage easement along Stringer/Maison Bleu property line" be provided (Punch List item #22).

QUESTION #7 – Could you provide a copy of the executed private drainage easement along the Stringer/Maison Bleu property line? If a private drainage easement has not been executed, what is your plan and timeline for getting this matter resolved since it is a Maison Bleu Phase I matter that impact the Association's detention pond? Please also provide an updated Property Line Survey to verify the private drainage easement is within the boundaries of the Maison Bleu subdivision.

There appears to be several discharges of stormwater into both the ditch you created behind the homes on Salvo Drive that then discharge into a swampy area that is apparently owned by "Peoples Bank-GhafarianPoor" (Parcel ID: 072-D-19D-021/00.00) and finally into the detention pond (Parcel ID: 072D-19D-184/00.00) that was once owned by SCM Development, LLC and is now owned by the Association. There are at least 2 concrete stormwater discharge outfalls (pipes) that appear to be discharging into the pond from the parking lots or businesses at Gas Lamp Village. On August 1, 2023, we requested that you identify and provide a listing of all entities known to be discharging stormwater into the Private Detention Area.

QUESTION #8 – Would you disclose all documentation related to all of these arrangements, including any draft, pending, or executed development agreements, indemnification agreements, financial agreements, private drainage easements, right-of-way agreements, responsibilities, pollution liability policies and any current Certificates of Insurance for Directors and Officers Liability, General Liability and Pollution Liability in favor of the Maison Bleu Homeowners Association, Inc., or other documentation related to the use of the detention pond now owned by the Association?

The draft Development Agreement that you emailed to several homeowners in Maison Bleu 1 on May 29, 2024 may have been modified since last shared with homeowners of Maison Bleu 1 subdivision.

QUESTION #9 - Could you provide a copy of the most current draft Development Agreement that is being negotiated with the City of Ridgeland and other parties?

QUESTION #10 – The draft Development Agreement clearly contemplates conditions related to the detention pond, which is owned by the Association, and it clearly contemplates "sharing" detention pond maintenance with the Association. Do you intend to include the Association as a party to the Development Agreement?

The executed Bylaws include at least two substantive errors in Section 8 Quorum relative to the voting percentages. The percentages are inconsistent, reading as follows: ".... of a minimum of forty percent (25%) of the Voting members.... [and] at which meeting twenty-five percent (15%).

QUESTION #11 – Given the fact that the first meeting of the Association is critical to ensure all proceedings are conducted consistent with the Bylaws, Declarations and in an orderly manner, do you, as a member of the Association, intend to amend the Bylaws and provide an executed copy to the HOA prior to the first meeting, and if so, when?

The Detention Pond and potential liability and current exposure to that liability is a concern for several residents. About a month ago, the body of a missing 4-year-old autistic child was found in the retention pond of a Canton apartment complex. Currently the public at large has direct access from the properties to the West of the Private Detention Area as there are no fence structures to prevent such access.

QUESTION #12 – Do you intend to install a fence structure and "No Trespassing" signs, limiting access to the Private Detention Area?

There appears to be some inconsistencies with respect to the Quit Claim Deed that you filed for the Detention Pond in August 2023 and the requirements of the Maison Bleu Declaration of Covenants. Under Article I of the Declaration of Covenants, the definition of a "Common Area" includes "retention/detention pond locations," and Article II Property Subject to Declaration, Section 2.02 Common Area states "The designation of any portion of Property as a Common Area shall not mean that the public at large acquires any easement of use, benefit and enjoyment in or to the Common Area. We are concerned that the stormwater drainage from numerous identified and unidentified neighboring properties is considered a "use, benefit or enjoyment of the common area" by the public, which is inconsistent with Article 2, Section 2.02 of the Declaration of Covenants. On the one hand the Declarations defines the Common Area, and then it appears to exclude the same Property because of the Public access.

QUESTION #13 – Please clarify your position regarding the public use, benefit or enjoyment of the retention pond and any inconsistencies that may exist in legal documents related to the Detention Pond?

QUESTION #14 – As per the Declaration of Covenants, the Definition of "Common Area" shall mean all real property shown and designated on the Plat as a Common Area...." Could you please provide a copy of the Plat showing and designating the Common Area and the date that the Plat was recorded in the land

records.

Trees, pond growth, silt, and erosion have been allowed to occur overtime. The concern is that the pond may not function as originally designed, especially if a new property owner/contractor plans on Phase II to also be a containment for water run off for an additional 50+ new homes and if drainage easements have been negotiated that the homeowners are not aware of. Phase I member residents feel the Detention Pond should be evaluated and certified by the appropriate parties (Developer, City, DEQ) that the pond will function as designed and will accommodate water run off for both Phase I, Phase II, and other drainage that may have been allowed since it was originally designed by a registered Professional Engineer when the original retention pond was designed nearly a decade ago.

QUESTION #15 – Could you provide a copy of the most recent stamped/sealed Professional Engineering plans and specifications that addresses both Phase I and II as well as any modifications to the pond design that may have occurred since the original design nearly a decade ago?

QUESTION #16 – Could you confirm that the Developer and any new owner/developer for Phase II has and or will maintain appropriate insurance, which we consider, at a minimum, to include a General Liability Policy of 1M occurrence/2M aggregate and an Umbrella Policy of at least a 2M occurrence?

QUESTION #17 – Could you provide a current Certificate of Insurance which outlines the current coverages, that includes "Maison Bleu Homeowners Association, Inc." as an Additional Insured entity on the coverage which and matches or exceeds the amounts of insurance noted in the question above?

Several homeowners have concerns related to how the Phase I Homeowners Association will be affected by the addition of new houses constructed in Phase II. Obviously, the neighborhood is concerned about the enforcement of the Covenants that make Maison Bleu unique and maintain property values. You had mentioned in an email on April 5, 2023 that the plan is to only have one homeowner's association for the development and that Phase II homeowners will be absorbed and/or annexed into Phase I "as homes are sold," yet some homeowners have heard that Phase II Homeowners will join the Phase I HOA when all the Phase II Homes are completed.

QUESTION #18 – Could you please clarify your understanding of whether homeowners in Phase II will be absorbed and/or annexed into the Phase I Homeowners Association "as homes are sold" or after all the Phase II homes are completed?

The homeowners would appreciate your consideration and prompt response to these questions in writing to me prior to your meeting with several of them on October 23, 2024, so the meeting can be productive and everyone will have a clear understanding of the outstanding issues so that a path towards closure can be developed. If you have any questions in the meantime, feel free to direct to contact me.

Sincerely yours,

COPELAND, COOK, TAYLOR & BUSH, P.A.

By: _____
Walker R. Gibson

cc: Alan Hart, City of Ridgeland

BRUNINI
ATTORNEYS AT LAW

KEN HARMON
E-mail: kharmon@brunini.com
Direct: 601.960.6870

The Pinnacle Building, Suite 100
190 East Capitol Street
Jackson, Mississippi 39201
Telephone: 601.948.3101

Post Office Drawer 119
Jackson, Mississippi 39205

Facsimile: 601.960.6902

October 14, 2024

VIA EMAIL: wgibson@cctb.com
Walker R. Gibson
Copeland Cook Taylor & Bush
P. O. Box 6020
Ridgeland, MS 39158

RE: Maison Blue Subdivision

Dear Walker:

Our firm represents SCM Development, LLC ("SCM") in connection with Maison Bleu Subdivision in Ridgeland. I am writing you in response to your letter to Matt Herfurth dated October 8, 2024, which posed certain questions regarding Maison Bleu and Maison Bleu Homeowners Association, Inc. (the "Association"). The following are SCM's responses to the questions set forth in your letter.

Question #1: Upon the closing of the sale of the Phase II property to MBII Developers, LLC ("MBII"), SCM will execute and record an Assignment of the Declarant's rights with respect to Phase I to the Association and an Assignment of the Declarant's rights with respect to Phase II to MBII.

Question #2: Upon the closing of the sale of the Phase II property to MBII, SCM will execute and record a Supplemental Declaration of Covenants, Conditions and Restrictions for Maison Bleu, Phase II, which will annex and subject the Phase II property to the provisions of the Declaration of Covenants, Conditions, and Restrictions for Maison Bleu Subdivision Phase I, subject to certain modifications, amendments, and additions as specified in said Supplemental Declaration. If the Phase II property is sold to another party, SCM reserves the right to make any changes to the Declaration of Covenants for the Phase II property to complete a sale to such party.

Question #3: Yes. Matt Herfurth previously did this, but the Phase I homeowners cancelled the meeting.

Question #4: Mattt Herfurth will follow all procedural requirements regarding notice and conduct of the first meeting of the Association.

Question #5: Matt Herfurth will comply with all rules set forth in the Declaration of Covenants and the Bylaws of the Association.

Question #6: No federal tax return was filed for 2023 since the Association had no income.

Question #7: SCM is not aware that any private drainage easement has been obtained, and there is no plan to do so since this was not required by the City prior to, during, or after completion of Phase I and has never been an issue until recently.

Question #8: SCM is not aware of any documentation.

Question #9: You would need to contact Alan Hart to obtain this.

Question #10: The Association is not a party to the current draft of the Development Agreement.

Question #11: These two errors were in the revised draft of the Bylaws which you sent, and we did not catch them. Enclosed is a revised copy of the executed Bylaws with a revised page 3 inserted, which corrects the referenced language in Section 8 of Article IV to read as follows: "a minimum of twenty-five percent (25%) of the Voting Members eligible to vote shall constitute a quorum" and "at which meeting fifteen (15%) of the Voting Members shall be considered a quorum."

Question #12: None was or is required. This would be the responsibility of the Association.

Question #13: SCM does not believe there are any inconsistencies in the legal documents relating to the detention pond. The City has indicated to Matt Herfurth in the past that all neighboring properties have the right to drain into the detention pond in the current property condition (which has been the case for the past eight years), but, if the properties change the flow of water from its current status through construction, the neighboring property owners would need permission from the Association and the City to do so.

Question #14: The Declaration of Covenants for Phase I defines "Plat" as the subdivision map or plat of the Subdivision which is filed for record in the office of the Chancery Clerk of Madison County. The Plat for Phase I was filed on January 30, 2015, in Plat Cabinet F, Slide 14A. The Declaration of Covenants defines "Common Area" as follows:

h. "Common Area" shall mean all real property shown and designated on the Plat as a Common Area which is owned or otherwise made available to the Association for the common use, benefit and enjoyment of the Members, including but not limited to, all retention/detention ponds located thereon. The Common Area shall be all of the Property except (i) all platted and numbered Lots as shown and designated on a Plat, (ii) any portion of the Property shown and designated on a Plat as reserved or designated for future development as a part of an addition to the residential community, (iii) the Streets, and (iv) easements as shown and designated on a Plat for utilities and all water and sewer lines located in such easements or within Streets

Thus, the detention pond constitutes a Common Area.

Question #15: According to the city engineer, these documents are on file with City of Ridgeland.

Question #16: SCM has no knowledge regarding the insurance maintained by MBII.

Question #17: See the enclosed Certificate of Insurance.

Question #18: According to the current drafts of the documents, this will occur when all homes in Phase II are completed.

Also, can you please provide the names and addresses of the Phase I homeowners that you represent.

Please let me know if you have any questions.

Sincerely,

Brunini, Grantham, Grower & Hewes, PLLC

Ken Harmon

Ken Harmon

Enclosures

ORDER OF THE MAYOR AND BOARD OF ALDERMEN OF THE CITY OF RIDGELAND, MADISON COUNTY, MISSISSIPPI APPROVING AND GRANTING PETITION AND APPLICATION FOR DIMENSIONAL VARIANCE IN REGARD TO THE PETITION OF SCM DEVELOPMENT, LLC FOR PROPERTY LOCATED NORTH OF JACKSON STREET AND MAISON BLEU SUBDIVISION BEING IDENTIFIED AS PARCEL NO. 072D-19D-076/03.00 IN THE CITY OF RIDGELAND, MADISON COUNTY, MISSISSIPPI

WHEREAS, SCM Development (the "Petitioner") did file a Petition and Application for Dimensional Variance to reduce the required minimum 25-foot front and 20-foot rear yard setbacks to 15-foot front and 10-foot rear yard setbacks on the subject property; and,

WHEREAS, the Mayor and Board of Aldermen referred the Petition to the Zoning Board of the City of Ridgeland (the "Zoning Board"), which Board scheduled a hearing on said Petition for December 5, 2024, at 6:00 o'clock p.m.; and,

WHEREAS, the City Clerk did cause notice of the December 5, 2024, hearing to be published in the Madison County Journal, a newspaper published in the City of Ridgeland, Madison County, Mississippi, in the manner and for the time required by law, and the Zoning Administrator did post notice of same upon the affected property in the manner and for the time required by law; and,

WHEREAS, the Zoning Board of the City of Ridgeland, Mississippi, did conduct a full and complete hearing on the Petition at the December 5, 2024, meeting, and received comments and heard evidence presented by the Petitioner and all others who appeared at said hearing and thereafter forwarded its recommendation thereon to the Mayor and Board of Aldermen; and,

WHEREAS, the Mayor and Board of Aldermen are familiar with the property and existing land uses within the City of Ridgeland and in the area of the city where the property is

located and in acting on this Order, have duly considered the matters and facts within their personal knowledge as same affect the land uses requested in the Petition filed herein; and,

WHEREAS, at the conclusion of the discussion of the Zoning Board's recommendation, the Mayor asked whether the Board of Aldermen desired to take any action regarding the Petition and the recommendation of the Zoning Board, and after discussion thereof, Alderman _____ offered the following Order and moved that it be adopted, to-wit:

NOW, THEREFORE, be it ordered by the Mayor and Board of Aldermen of the City of Ridgeland, Madison County, Mississippi as follows, to-wit:

SECTION 1. That the matters and facts stated in the preamble hereof are found, determined, and adjudicated to be true and correct.

SECTION 2. That a dimensional variance be, and same is hereby granted from the dimensional requirements of Section 250.04 of the Zoning Regulations Ordinance of the City of Ridgeland, allowing the minimum setback distances – 15-foot front and 10-foot rear yard setbacks on the subject property in the City of Ridgeland, Mississippi.

SECTION 3. The property affected by this Order is located in the City of Ridgeland, Madison County, Mississippi and described as:

> 7.637 ACRES OR 332687.07 SQFT., MORE OR LESS, AND BEING PART OF LOTS 1 AND 4 OF BLOCK 18, HIGHLAND COLONY SUBDIVISION, A SUBDIVISION ACCORDING TO THE MAP OR PLAT OF WHICH IS ON FILE IN THE OFFICE OF THE CHANCERY CLERK, MADISON COUNTY, MISSISSIPPI, SAID PARCEL IS LOCATED IN THE SOUTHEAST QUARTER OF THE SOUTHEAST QUARTER OF SECTION 19, TOWNSHIP 7 NORTH, RANGE 2 EAST, CITY OF RIDGELAND, MADISON COUNTY, MISSISSIPPI AND BEING MORE PARTICULARLY DESCRIBED AS FOLLOWS, TO WIT;
>
> COMMENCING AT A FOUND CONCRETE MONUMENT MARKING THE NORTHEAST CORNER OF THE SOUTHEAST QUARTER OF SECTION 19, TOWNSHIP 7 NORTH, RANGE 2 EAST, CITY OF RIDGELAND, MADISON

COUNTY, MISSISSIPPI;

THENCE PROCEED SOUTH 00°18' 48" EAST FOR A DISTANCE OF 1,321.95 FEET TO A FOUND CONCRETE MONUMENT AND THE POINT OF BEGINNING OF THE FOLLOWING DESCRIBED PARCEL OF LAND;

THENCE S 00°19'29" E A DISTANCE OF 693.15 FEET TO A FOUND 1 /2" REBAR;

THENCE S 89°40'33" W A DISTANCE OF 100.00 FEET TO A FOUND 1 /2" REBAR ON THE EAST RIGHT-OF-WAY LINE OF BLEU DRIVE, A PAVED PUBLIC ROAD AS NOW LAID OUT AND IN USE THIS DATE (SEPTEMBER 2023);

THENCE LEAVING SAID EAST RIGHT-OF-WAY LINE OF BLEU DRIVE, RUN N 86°35'39" W A DISTANCE OF 50.11 FEET TO A FOUND 1 /2" REBAR ON THE WEST RIGHT-OF-WAY LINE OF SAID BLEU DRIVE;

THENCE LEAVING SAID WEST RIGHT-OF-WAY LINE OF BLEU DRIVE, RUN S 89°40'31" W A DISTANCE OF 200.00 FEET TO A FOUND 1/2" REBAR ON THE EAST RIGHT-OF-WAY LINE OF DEYOUNG DRIVE, A PAVED PUBLIC ROAD AS NOW LAID OUT AND IN USE THIS DATE (SEPTEMBER 2023);

THENCE LEAVING SAID EAST RIGHT-OF-WAY LINE OF DEYOUNG DRIVE, RUN N 66°21'08" W A DISTANCE OF 54.79 FEET TO A FOUND 1/2" REBAR ON THE WEST RIGHT-OF-WAY LINE OF SAID DEYOUNG DRIVE;

THENCE LEAVING SAID WEST RIGHT-OF-WAY LINE OF DEYOUNG DRIVE, RUN N 89°48'31" W A DISTANCE OF 100.00 FEET TO A FOUND 1 /2" REBAR;

THENCE N 00°19'28" W A DISTANCE OF 564.10 FEET TO A FOUND 1 /2" RE BAR;

THENCE N 90°00'00" E A DISTANCE OF 84.81 FEET TO A FOUND 1 /2" REBAR ON SAID WEST RIGHT-OF-WAY LINE OF DEYOUNG DRIVE;

THENCE CONTINUE ALONG SAID WEST RIGHT-OF-WAY LINE WITH A CURVE TURNING TO THE RIGHT WITH AN ARC LENGTH OF 22.52 FEET, A RADIUS OF 50.00 FEET, A CHORD BEARING OF N 48°57'31" E, AND A CHORD LENGTH OF 22.33 FEET TO A FOUND 1 /2" REBAR;

THENCE LEAVING SAID WEST RIGHT-OF-WAY LINE OF DEYOUNG

DRIVE, RUN N 00°01'03" E A DISTANCE OF 90.92 FEET TO A FOUND 1/2" REBAR;

THENCE S 89°58'57" E A DISTANCE OF 397.79 FEET BACK TO THE POINT OF BEGINNING OF THE ABOVE DESCRIBED PARCEL OF LAND, CONTAINING 7.637 ACRES OR 332687.07 SQFT., MORE OR LESS.

SECTION 4. That it is hereby found and determined that the conditions precedent to the granting of a dimensional variance as required in Section 600.08 of the City of Ridgeland Zoning Regulations Ordinance of February 2014, exist, and have been satisfied in regard to the granting of the dimensional variance described herein.

SECTION 5. That, with the sole exception of the dimensional variance granted herein, the property shall be subject to all of the provisions of the City of Ridgeland Zoning Regulations Ordinance of February, 2014.

ORDERED, ADOPTED AND APPROVED by the Mayor and Board of Aldermen of the City of Ridgeland, Madison County, Mississippi at a regular meeting thereof held on the _____ day of _____, 2024.

The motion for adoption was seconded by Alderman _____ and the foregoing Order having been first reduced to writing, was submitted to the Board of Aldermen for passage or rejection on roll call vote with the following results:

Alderman Ken Heard (Ward 1) voted: _____
Alderman Chuck Gautier (Ward 2) voted: _____
Alderman Kevin Holder (Ward 3) voted: _____
Alderman Brian Ramsey (Ward 4) voted: _____
Alderman Bill Lee (Ward 5) voted: _____
Alderman Wesley Hamlin (Ward 6) voted: _____
Alderman D.I. Smith (At large) voted: _____

Whereupon, the Mayor declared the motion carried and the Order adopted.

The foregoing Order is approved, this the _____ day of _____, 2024.

_____
Gene F. McGee, Mayor of the
City of Ridgeland, Mississippi

ATTEST:

_____
Paula Tierce, City Clerk

(S E A L)

RESOLUTION OF THE MAYOR AND BOARD OF ALDERMEN OF THE CITY OF RIDGELAND, MADISON COUNTY, MISSISSIPPI DENYING THE PETITION AND APPLICATION FOR DIMENSIONAL VARIANCE IN REGARD TO THE PETITION OF SCM DEVELOPMENT, LLC FOR PROPERTY LOCATED NORTH OF JACKSON STREET AND MAISON BLEU SUBDIVISION BEING IDENTIFIED AS PARCEL NO. 072D-19D-076/03.00, IN THE CITY OF RIDGELAND, MADISON COUNTY, MISSISSIPPI

WHEREAS, SCM Development, LLC (the "Petitioner") did file a Petition and Application for Dimensional Variance to reduce the required minimum 25-foot front and 20-foot rear yard setbacks to 15-foot front and 10-foot rear yard setbacks on the subject property; and,

WHEREAS, the Mayor and Board of Aldermen referred the Petition to the Zoning Board of the City of Ridgeland (the "Zoning Board"), which Board scheduled a hearing on said Petition for December 5, 2024, at 6:00 o'clock p.m.; and,

WHEREAS, the City Clerk did cause notice of the December 5, 2024, hearing to be published in the Madison County Journal, a newspaper published in the City of Ridgeland, Madison County, Mississippi, in the manner and for the time required by law, and the Zoning Administrator did post notice of same upon the affected property in the manner and for the time required by law; and,

WHEREAS, the Petitioner did provide evidence that the Petitioner had mailed notice of hearing to adjoining property owners; and,

WHEREAS, the Zoning Board of the City of Ridgeland, Mississippi, did conduct a full and complete hearing on the Petition at the December 5, 2024, meeting, and received comments and heard evidence presented by the Petitioner and thereafter forwarded its recommendation thereon to the Mayor and Board of Aldermen; and,

WHEREAS, the Mayor and Board of Aldermen are familiar with the property and existing land uses within the City of Ridgeland and in the area of the city where the property is located and in acting on this Resolution, have duly considered the matters and facts within their personal knowledge as same affect the land uses requested in the Petition filed herein; and,

WHEREAS, at the conclusion of the discussion of the Zoning Board's recommendation, the Mayor asked whether the Board of Aldermen desired to take any action regarding the Petition and the recommendation of the Zoning Board, and after discussion thereof, Alderman _____ offered the following Resolution and moved that it be adopted, to-wit:

IT IS, THEREFORE, RESOLVED by the Mayor and Board of Aldermen of the City of Ridgeland, Madison County, Mississippi, as follows: to-wit:

SECTION 1. That the matters and facts stated in the preamble hereof are found, determined and adjudicated to be true and correct.

SECTION 2. The property affected by this Resolution is located in the City of Ridgeland, Madison County, Mississippi, and described as:

> 7.637 ACRES OR 332687.07 SQFT., MORE OR LESS, AND BEING PART OF LOTS 1 AND 4 OF BLOCK 18, HIGHLAND COLONY SUBDIVISION, A SUBDIVISION ACCORDING TO THE MAP OR PLAT OF WHICH IS ON FILE IN THE OFFICE OF THE CHANCERY CLERK, MADISON COUNTY, MISSISSIPPI, SAID PARCEL IS LOCATED IN THE SOUTHEAST QUARTER OF THE SOUTHEAST QUARTER OF SECTION 19, TOWNSHIP 7 NORTH, RANGE 2 EAST, CITY OF RIDGELAND, MADISON COUNTY, MISSISSIPPI AND BEING MORE PARTICULARLY DESCRIBED AS FOLLOWS, TO WIT;
>
> COMMENCING AT A FOUND CONCRETE MONUMENT MARKING THE NORTHEAST CORNER OF THE SOUTHEAST QUARTER OF SECTION 19, TOWNSHIP 7 NORTH, RANGE 2 EAST, CITY OF RIDGELAND, MADISON COUNTY, MISSISSIPPI;
>
> THENCE PROCEED SOUTH 00°18' 48" EAST FOR A DISTANCE OF 1,321.95 FEET TO A FOUND CONCRETE MONUMENT AND THE POINT OF

BEGINNING OF THE FOLLOWING DESCRIBED PARCEL OF LAND;

THENCE S 00°19'29" E A DISTANCE OF 693.15 FEET TO A FOUND 1 /2" REBAR;

THENCE S 89°40'33" W A DISTANCE OF 100.00 FEET TO A FOUND 1 /2" REBAR ON THE EAST RIGHT-OF-WAY LINE OF BLEU DRIVE, A PAVED PUBLIC ROAD AS NOW LAID OUT AND IN USE THIS DATE (SEPTEMBER 2023);

THENCE LEAVING SAID EAST RIGHT-OF-WAY LINE OF BLEU DRIVE, RUN N 86°35'39" W A DISTANCE OF 50.11 FEET TO A FOUND 1 /2" REBAR ON THE WEST RIGHT-OF-WAY LINE OF SAID BLEU DRIVE;

THENCE LEAVING SAID WEST RIGHT-OF-WAY LINE OF BLEU DRIVE, RUN S 89°40'31" W A DISTANCE OF 200.00 FEET TO A FOUND 1/2" REBAR ON THE EAST RIGHT-OF-WAY LINE OF DEYOUNG DRIVE, A PAVED PUBLIC ROAD AS NOW LAID OUT AND IN USE THIS DATE (SEPTEMBER 2023);

THENCE LEAVING SAID EAST RIGHT-OF-WAY LINE OF DEYOUNG DRIVE, RUN N 66°21'08" W A DISTANCE OF 54.79 FEET TO A FOUND 1/2" REBAR ON THE WEST RIGHT-OF-WAY LINE OF SAID DEYOUNG DRIVE;

THENCE LEAVING SAID WEST RIGHT-OF-WAY LINE OF DEYOUNG DRIVE, RUN N 89°48'31" W A DISTANCE OF 100.00 FEET TO A FOUND 1 /2" REBAR;

THENCE N 00°19'28" W A DISTANCE OF 564.10 FEET TO A FOUND 1 /2" RE BAR;

THENCE N 90°00'00" E A DISTANCE OF 84.81 FEET TO A FOUND 1 /2" REBAR ON SAID WEST RIGHT-OF-WAY LINE OF DEYOUNG DRIVE;

THENCE CONTINUE ALONG SAID WEST RIGHT-OF-WAY LINE WITH A CURVE TURNING TO THE RIGHT WITH AN ARC LENGTH OF 22.52 FEET, A RADIUS OF 50.00 FEET, A CHORD BEARING OF N 48°57'31" E, AND A CHORD LENGTH OF 22.33 FEET TO A FOUND 1 /2" REBAR;

THENCE LEAVING SAID WEST RIGHT-OF-WAY LINE OF DEYOUNG DRIVE, RUN N 00°01'03" E A DISTANCE OF 90.92 FEET TO A FOUND 1/2" REBAR;

THENCE S 89°58'57" E A DISTANCE OF 397.79 FEET BACK TO THE POINT

OF BEGINNING OF THE ABOVE DESCRIBED PARCEL OF LAND CONTAINING 7.637 ACRES OR 332687.07 SQFT., MORE OR LESS.

SECTION 3. That the petition of SCM Development, LLC for Dimensional Variance on the property described herein, be and same is hereby denied.

SO RESOLVED BY THE MAYOR AND BOARD OF ALDERMEN of the City of Ridgeland, Madison County, Mississippi, at a regular meeting thereof held on the ___ day of _____, 2024.

The motion to adopt the above and foregoing Resolution was seconded by Alderman _____, and the foregoing Resolution was submitted to the Board of Aldermen for passage or rejection on roll call vote with the following result:

Alderman Ken Heard (Ward 1) voted: _____
Alderman Chuck Gautier (Ward 2) voted: _____
Alderman Kevin Holder (Ward 3) voted: _____
Alderman Brian Ramsey (Ward 4) voted: _____
Alderman Bill Lee (Ward 5) voted: _____
Alderman Wesley Hamlin (Ward 6) voted: _____
Alderman D. I. Smith (At large) voted: _____

Whereupon, the Mayor declared the motion carried and the resolution adopted.

The foregoing resolution is approved, this the _____ day of _____, 2024.

_____
Gene F. McGee, Mayor of the
City of Ridgeland, Mississippi

Attest:

_____
Paula Tierce, City Clerk

[S E A L]

BEFORE THE MAYOR AND BOARD OF ALDERMEN OF
THE CITY OF RIDGELAND, MADISON COUNTY, MISSISSIPPI

PETITION AND APPLICATION FOR DIMENSIONAL VARIANCE

(Official Form February 2014)

COMES NOW, SCM DEVELOPMENT, LLC, (the "Petitioner") and
[Name of Petitioner(s)]
respectfully petitions the Mayor and Board of Aldermen of the City of Ridgeland, Mississippi, to grant a dimensional variance from those requirements as set forth in Section 600.08 of the City of Ridgeland Zoning Ordinance of February, 2014, as more specifically described in this Petition for that real property described in this Petition, and in support of this Petition would show as follows:

1. The name of the Petitioner is SCM DEVELOPMENT, LLC (hereinafter referred to as "Petitioner").

2. The Petitioner's mailing address is 108 AERO Smith DR. RICHLAND, MS 39218 and the Petitioner's attorney or representative's mailing address is KEN HARMON BRUNINI LAW FIRM 190 E. Capitol SUITE 100 JACKSON MS 39201.

3. The Petitioner's phone number is 601-354-4464 and the Petitioner's attorney's phone number is (if applicable) 601-948-3101.

4. The record title holder of the property is SCM DEVELOPMENT, LLC, and a copy of the property deed with legal description is attached hereto as Exhibit "A". Additionally, digital text version of the legal description shall be provided to the Zoning Administrator for use in advertising the public hearing.

5. If the Petitioner is not the owner of the property, the owner's address and phone number is N/A _____.

6. A copy of the written authority of the owner's representative to act on behalf of the Owner is attached hereto as Exhibit "B", if applicable. N/A

7. The street address of the property is: JACKSON STREET LOT

Ridgeland, Mississippi 39157

(and/or) Tax Parcel ID Number(s): 072D-19D-076/03.00

8. A copy of a plat or map of the property certified by a licensed land surveyor is attached as Exhibit "C". ✓

9. A vicinity map or plat depicting an area of at least 300' surrounding the subject property in all directions is attached to this Petition as Exhibit "D". The vicinity map includes the current zoning classification of all lands within 160' of the subject property. ✓

10. The property is presently zoned R4, according to the official zoning map of Ridgeland, Mississippi.

11. Petitioner requests that it be granted a dimensional variance from the dimensional requirements as set forth in Section 250.04 of the Zoning

[Section of ordinance containing dimensional requirements]

Ordinance of the City of Ridgeland, Mississippi, which requires 25' FRONT
5' SIDES
20' BACK.

12. Petitioner intends to use the subject property for the following purpose(s) in accord with its present zoning classification:

CONSTRUCTION OF SINGLE FAMILY HOMES LIKE PHASE 1.

13. A site plan for development of the property as required by Section 600.08 of the Zoning Ordinance is attached as Exhibit "E". ✓

14. Petitioner requests a dimensional variance to change the dimensional requirements to:

FRONT = 15'

SIDES = 5'

REAR = 10'

15. The variance from the dimensional setback requirements is requested so that the Petitioner can:

CONSTRUCT SINGLE FAMILY HOMES AND YARDS SIMILAR TO PHASE 1 (SAME VARIANCE), SAME SIZE HOUSES.

16. The conditions and circumstances which have caused this request are not the result of actions of the Petitioner, but result from:

DIMENSIONAL VARIANCE GIVEN FOR PHASE 1, but WAS OVERLOOKED FOR PHASE 2.

17. No special privilege will be granted to the Petitioner by the approval of this dimensional variance which is not enjoyed by other property owners within this use district classification (zoning district). Other properties which enjoy the requested dimensions within the same zoning district are:

MAISON BLEU PHASE 1. 33 HOMES.

18. Petitioner believes that the reasons set forth in this Petition justify the granting of the variance, and the requested variance constitutes the minimum allowable deviation from the dimensional requirements of the Zoning Ordinance, while at the same time allowing for responsible use of the property as:

~~CONTINUED~~ CONTINUING CONSTRUCTION OF SAME SIZE DWELLINGS AS IN PHASE 1 RATHER THAN MUCH SMALLER, LESS EXPENSIVE HOMES RESULTING IN LOWER HOME VALUES.

19. Petitioner would show that the planned use of the property and the requested variance would be in harmony with the general purpose and intent of the Zoning Ordinance, and would not be injurious to the neighborhood, the adjoining property, or detrimental to the public welfare.

20. The required $150.00 filing fee has been paid with the filing of this Petition. ✓

Respectfully submitted,

PETITIONER

3-19-24
DATE

A

BOOK 2929 PAGE 991 DOC 01 TY W
INST # 700411 MADISON COUNTY MS.
This instrument was filed for
record 4/17/13 at 10:23:05 AM
ARTHUR JOHNSTON, C.C. BY: KAA D.C.

This instrument prepared by and should be returned to:
ROBERT D. HARRISON
Post Office Box 16389
Jackson, Mississippi 39236-6389
(601) 957-0002

118-13

GRANTOR'S ADDRESS:
618 Crescent Blvd., Suite #100
Ridgeland, MS 39157
(601) 605-8786

GRANTEE'S ADDRESS:
22 Eastbrooke Street
Jackson, MS 39216
(573) 836-1620

INDEXING INSTRUCTIONS: **Part Lots 1 & 4, Block 18, Highland Colony Subdivision, Madison County, MS**

SPECIAL WARRANTY DEED

FOR AND IN CONSIDERATION of the sum of Ten Dollars ($10.00) cash in hand paid, and other good and valuable consideration, the receipt and sufficiency of all of which is hereby acknowledged, the undersigned, **SBT PROPERTIES CORP.,a Mississippi business corporation,** does hereby sell, convey, and specially warrant unto **SCM DEVELOPMENT, LLC, a Mississippi limited liability company**, the following described land and property lying and being situated in Madison County, Mississippi, more particularly described as follows, to-wit:

SEE EXHIBIT "A" HERETO ATTACHED.

RETURN TO:
ROBERT D. HARRISON
P.O. BOX 16389
JACKSON, MS 39236-6389
(601) 957-0002

5

The Grantee has inspected and examined the property and is purchasing same based on no representation or warranties expressed or implied, made by SBT Properties Corp., but on its own judgment.

Excepted from the warranty of this conveyance are:

1. Zoning and building ordinances.
2. Restrictive covenants recorded in Book 1244 at Page 816.
3. Terms and conditions of Agreement recorded in Book 230 at Page 394 and Book 230 at Page 398.
4. Easement to City of Ridgeland in Book 1920 at Page 224 and Book 1820 at Page 562,
5. That certain twenty (20) foot road easement or right of way along the East line of the subject property as reflected on various plats.
6. All matters as shown by survey plat attached to Correction Warranty Deed recorded in Book 2492 at Page 1.
7. Ordinance vacating Evergreen Street in Book 2361 at Page 686, and the fifteen (15) foot easement reserved therein by the City of Ridgeland.
8. Terms and conditions contained in Warranty Deed recorded in Book 211 at Page 562.
9. Prior reservations and conveyances of all oil, gas and other minerals.
10. Ad valorem taxes for the year 2013, which have been prorated as of the date of this deed on an estimated basis and assumed in full by Grantee.

11. Matters not of record and matters not properly indexed in the sectional indices of said county.

12. The effect of, if any, applicable zoning ordinances and subdivision regulations and amendments thereto.

Grantor and Grantee acknowledge that the ad valorem taxes for the present year were prorated on an estimated basis. If this proration proves to be inaccurate upon receipt of the actual tax statement for the present year, Grantor and Grantee shall adjust this proration based on the actual tax figures.

Grantor does hereby covenant with the Grantee, except as above noted, that, at the time of the delivery of this deed, the premises were free from all encumbrances made by it, and that it will warrant and defend the same against the lawful claims and demands of all persons claiming by, through, or under it, but against none other.

WITNESS MY SIGNATURE, this the 15 day of April, 2013.

SBT PROPERTIES CORP., a Mississippi
Business Corporation

BY: _____
Kirk Graves,
President

STATE OF MISSISSIPPI

COUNTY OF MADISON

THIS DAY personally appeared before me, the undersigned authority in and for said

County and State, within my jurisdiction, on this the 15 day of April, 2013, the within named KIRK GRAVES, who acknowledged that he is a/the President of SBT PROPERTIES CORP., a Mississippi business corporation, and that for and on behalf of said corporation, and as its act and deed, he executed the above and foregoing instrument on the day and year therein mentioned, after being first duly authorized by said corporation so to do.

NOTARY PUBLIC

STATE OF MISSISSIPPI
NOTARY PUBLIC
ID # 12939
ROBERT DAILEY HARRISON
Commission Expires
Dec. 9, 2013
MADISON COUNTY

My Commission Expires: _____

EXHIBIT A

A 15.45 acre parcel being part of Lots 1 and 4 of Block 18 of HIGHLAND COLONY SUBDIVISION as platted and recorded in Cabinet A at Slide 3 in the Office of the Chancery Clerk of Madison County, Mississippi, and being situated in the SE ¼ of SE ¼ of Section 19, T7N-R2E, City of Ridgeland, Madison County, Mississippi, and being more particularly described as follows:

Commencing at a concrete monument marking the NE corner of the SE ¼ of said Section 19, run thence S 00°12'21" E - 1351.96 ft. along the east line of Section 19 and the west line of Trace Ridge Subdivision, Part 2 and Trace Ridge Subdivision, Part 1 as platted and recorded in Cabinet C at Slide 11 in the office of the Chancery Clerk to the NE corner of Lot 1, Block 18 of HIGHLAND COLONY SUBDIVISION and to the POINT OF BEGINNING; run thence S 00°12'12" E - 991.87 ft. along the west line of said Trace Ridge Subdivision and the east line of said Section 19 to the NE corner of that parcel deeded to Robert Ross Bassett, III and Betty Ann Bassett as recorded in Book 211 at Page 562; thence N 89°51'19" W - 170.00 ft. along the north line of said Bassett parcel; thence S 00°12'12" E - 291.84 ft. along the west line of said Bassett parcel to a point on the apparent north right of way line of Jackson Street; thence S 89°49'20" W - 173.45 ft. along said right of way to a point on the east line of that parcel deeded to Earl James Stringer, II and Janice C. Stringer as recorded in Book 171 at Page 163; thence NORTH - 392.82 ft. along the east line of said Stringer parcel and an extension thereof; thence N 89°23'13" W - 320.02 ft. to a point on the west line of Lot 4 of Block 18 of Highland Colony Subdivision; thence NORTH - 889.23 ft. along the west line of Lot 4 and west line of Lot 1 of Block 18 to the NW corner thereof; thence S 89°51'49" E - 658.85 ft. along the north line of Lot 1, Block 18 and the south right of way of Evergreen Street to the POINT OF BEGINNING.

MAISON BLEU SUBDIVISION, PHASE II

SITUATED IN:

PART OF LOTS 1 AND 4 BLOCK 18, HIGHLAND COLONY SUBDIVISION, BEING SITUATED IN THE SE 1/4 OF THE SE 1/4 SECTION 19, T7N-R2E, CITY OF RIDGELAND, MADISON COUNTY, MISSISSIPPI

BEARINGS SHOWN ARE GEODETIC BASED ON GPS OBSERVATION

0 100 200 300

SCALE: 1"= 100'

THIS PROPERTY IS SITUATED IN ZONE "X" ACCORDING TO F.I.R.M. NO. 28089C0567F MARCH 17, 2010

This survey meets the Standards of Practice for Surveying set forth by the Mississippi State Board of Licensure for Professional Engineers and Land Surveyors to qualify as a "Class B" survey.
Fieldwork completed on:
February 9, 2024

POINT OF COMMENCEMENT:
IS A FOUND CONCRETE MONUMENT MARKING THE NE CORNER OF THE SE 1/4 OF SECTION 19, T7N-R2E, CITY OF RIDGELAND, MADISON COUNTY, MISSISSIPPI.

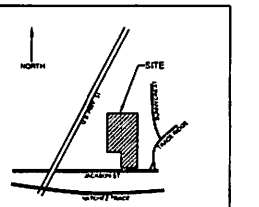

VICINITY MAP
(NOT TO SCALE)

CURVE	RADIUS	ARC LENGTH	CHORD LENGTH	CHORD BEARING
C1	50.00'	25.88'	25.59'	S 44°50'47" W
C2	50.00'	15.44'	15.38'	N 51°09'20" W
C3	50.00'	68.58'	63.33'	N 03°20'37" W
C4	50.00'	65.35'	60.80'	S 60°41'37" E
C5	50.00'	11.58'	11.55'	S 38°37'03" E
C6	50.00'	38.59'	37.64'	N 52°07'43" E
C7	50.00'	51.00'	49.00'	S 78°01'20" E
C8	50.00'	49.05'	47.10'	S 18°10'53" E
C9	50.00'	43.42'	42.07'	S 34°47'53" W
C10	50.00'	26.48'	26.17'	N 45°09'13" W

(Lots 13–24) Minimum Building Setbacks	(Lots 25–63) Minimum Building Setbacks
Front – 15'	Front – 15'
Side – 5'	Side – 5'
Rear – 15'	Rear – 10'

Note:
- All exterior corners set with 4" diameter x 30" Concrete Monumments
- All lot corners set with ½" x 24" Rebar
- As–Per City of Ridgeland Engineer, all Phase corners are set with ½" x 24" Rebar

LEGEND
- FOUND CONCRETE MONUMENT
- FOUND 1/2" REBAR
- SET 1/2"x18" REBAR
- BOUNDARY
- LOT LINES
- ADJOINING LINES
- EASEMENT
- SETBACKS

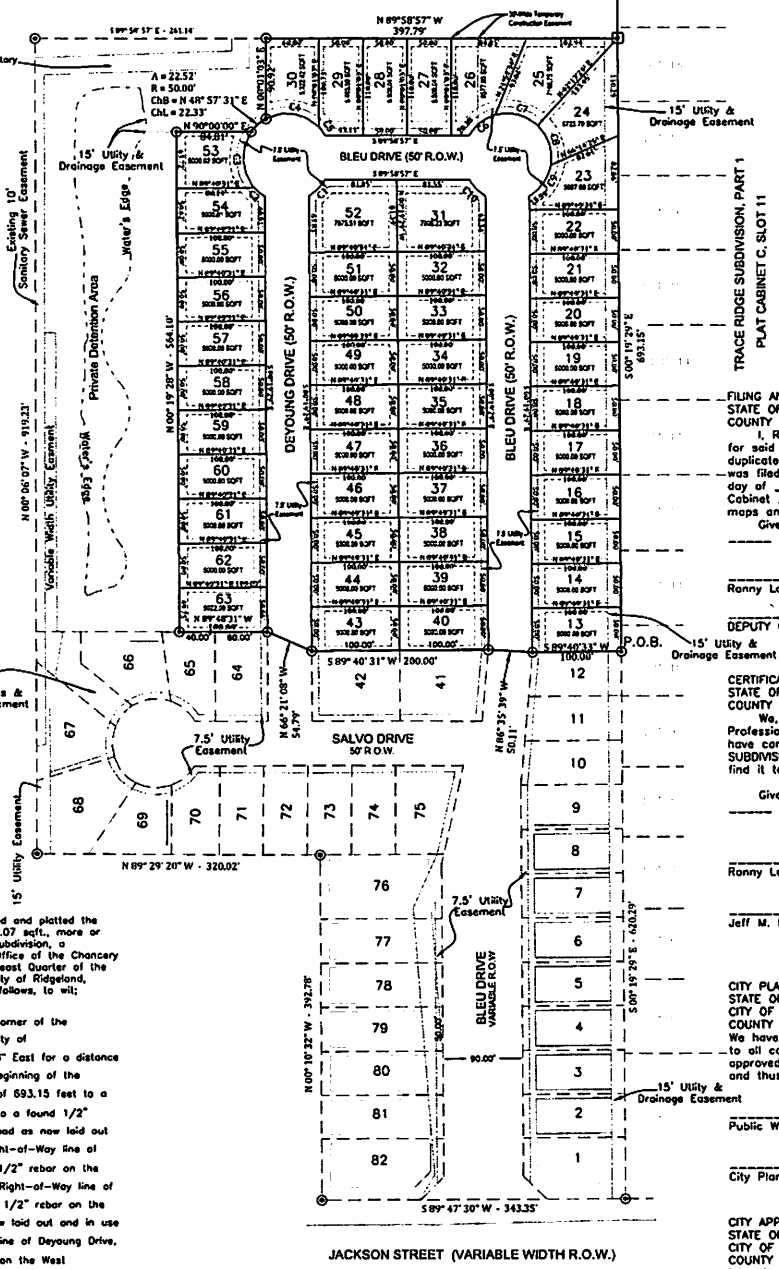

OWNER'S CERTIFICATE OF OWNERSHIP AND DEDICATION
STATE OF MISSISSIPPI
COUNTY OF MADISON
I, Steven French do hereby certify that DR Horton Inc. – Birmingham, the Owner of the property shown on the Plat and described in the Certificate of Jeff M. Lewis, the Land Surveyor appearing hereon; have caused same to be subdivided and platted as shown; and the property is all (or a part of) that tract as recorded in Deed Book 2764 Page 576, in the office of the Chancery Clerk of Madison County, Mississippi; and that I hereby adopt this plan of subdivision with Our free consent, and dedicate all streets, alleys, walks, parks and other open spaces to public use or to private use as noted.

WITNESS MY SIGNATURE on this the _____ Day of _____, 2024

_____
Steven French
DR Horton Inc. – Birmingham

ACKNOWLEDGMENT OF SIGNATURES
STATE OF MISSISSIPPI
CITY OF RIDGELAND
COUNTY OF MADISON
Personally appeared before me the undersigned authority in and for the jurisdiction aforesaid, the within named, Sid Robinson, managing partner of SCM Developers, LLC. who acknowledges to me that he executed the foregoing instrument as Owner, and who acknowledged to me that he executed Jeff M. Lewis, Land Surveyor, for the purpose therein contained.

Witness my hand and official seal of office on this the _____ day of _____, 2024

My Commission Expires:

_____
NOTARY PUBLIC

CERTIFICATES OF PERFORMANCE
SURVEYOR' S CERTIFICATE
STATE OF MISSISSIPPI
COUNTY OF MADISON

I, Jeff M. Lewis Land Surveyor do hereby certify that I have subdivided and platted the following described parcel of land containing 7.637 acres or 332687.07 sqft., more or less and being part of Lots 1 and 4 of Block 18, Highland Colony Subdivision, a subdivision according to the map or plat or which is on file in the Office of the Chancery Clerk, Madison County, Mississippi, said parcel is located in the Southeast Quarter of the Southeast Quarter of Section 19, Township 7 North, Range 2 East, City of Ridgeland, Madison County, Mississippi and being more particularly described as follows, to wit;

Commencing at a found concrete monument marking the Northeast corner of the Southeast Quarter of Section 19, Township 7 North, Range 2 East, City of Ridgeland, Madison County, Mississippi; thence proceed South 00°18'48" East for a distance of 1,321.95 feet to a found concrete monument and The Point of Beginning of the following described parcel of land; thence S 00°19'29" E a distance of 693.15 feet to a found 1/2" rebar; thence S 89°40'33" W a distance of 100.00 feet to a found 1/2" rebar on the East Right-of-Way line of Bleu Drive, a paved public road as now laid out and in use this date (September 2023); thence leaving said East Right-of-Way line of Bleu Drive, run N 86°35'39" W a distance of 50.11 feet to a found 1/2" rebar on the West Right-of-Way line of said Bleu Drive; thence leaving said West Right-of-Way line of Bleu Drive, run S 89°40'31" W a distance of 200.00 feet to a found 1/2" rebar on the East Right-of-Way line of Deyoung Drive, a paved public road as now laid out and in use this date (September 2023); thence leaving said East Right-of-Way line of Deyoung Drive, run N 66°21'08" W a distance of 54.79 feet to a found 1/2" rebar on the West Right-of-Way line of said Deyoung Drive; thence leaving said West Right-of-Way line of Deyoung Drive, run N 89°48'31" W a distance of 100.00 feet to a found 1/2" rebar; thence N 00°19'28" W a distance of 564.10 feet to a found 1/2" rebar; thence N 90°00'00" E a distance of 84.81 feet to a found 1/2" rebar on said West Right-of-Way line of Deyoung Drive; thence continue along said West Right-of-Way line with a curve turning to the right with an arc length of 22.52 feet, a radius of 50.00 feet, a chord bearing of N 48°57'31" E, and a chord length of 22.33 feet to a found 1/2" rebar; thence leaving said West Right-of-Way line of Deyoung Drive, run N 00°01'03" E a distance of 90.92 feet to a found 1/2" rebar; thence S 89°58'57" E a distance of 397.79 feet back to The Point of Beginning of the above described parcel of land containing 7.637 acres or 332687.07 sqft., more or less.

WITNESS MY SIGNATURE on this the _____ day of _____,2024
Registration Number 33410

_____
Jeff M. Lewis

CERTIFICATE OF COMPLIANCE WITH SUBDIVISION REGULATIONS
STATE OF MISSISSIPPI
COUNTY OF MADISON
I hereby certify that the monuments and markers shown hereon are in place on the ground and the plan and plat shown and described hereon area true and correct representation of a survey to the accuracy designated in the Subdivision Regulations for the City of Ridgeland, Madison County, Mississippi.

WITNESS MY SIGNATURE on the _____ day of _____,2024

_____
Jeff M. Lewis, PLS 33410

FILING AND RECORDATION
STATE OF MISSISSIPPI
COUNTY OF MADISON
I, Ronny Lott, Clerk of the Chancery Court in and for said County and State, do hereby certify that this duplicate plat of MAISON BLEU SUBDIVISION, PHASE II was filed for recording my office on this the _____ day of _____, 2024, and was duly recorded in Cabinet _____ at Slide _____ of the records of maps and plats of land of Madison County, Mississippi.
Given under my hand and seal of office this _____ day of _____, 2024.

_____
Ronny Lott, CHANCERY CLERK

_____
DEPUTY CLERK

CERTIFICATE OF COMPARISON
STATE OF MISSISSIPPI
COUNTY OF MADISON
We, Ronny Lott, Clerk and Jeff M. Lewis, Professional Land Surveyor, do hereby certify that we have carefully compared this plat of MAISON BLEU SUBDIVISION, PHASE II with the original thereof, and find it to be a true and correct copy of said plat.

Given under my hand and seal of office this _____ day of _____, 2024

_____
Ronny Lott, CHANCERY CLERK

_____
Jeff M. Lewis, PS-33410

CITY PLANNING AND ENGINEER'S APPROVAL
STATE OF MISSISSIPPI
CITY OF RIDGELAND
COUNTY OF MADISON
We have examined this plat and find that it conforms to all conditions set forth on the preliminary plat as approved by the Mayor and Board of Aldermen and thus recommend final approval.

_____
Public Works Director

_____
City Planning and Zoning Board Chairman

CITY APPROVAL CERTIFICATE
STATE OF MISSISSIPPI
CITY OF RIDGELAND
COUNTY OF MADISON
I hereby certify that this is a true copy and that this plat was approved by the Mayor and Board of Aldermen in session on the _____ day of _____, 2024

ATTEST:

_____
MAYOR CITY OF RIDGELAND

_____
CITY CLERK

PRELIMINARY PLAT
DATE: 03/18/2024

SURVEYED AND PLATTED BY
R.E.D.
LAND SURVEYING, LLC
304 RIVERTON COURT
BYRAM, MISSISSIPPI 39272
PHONE: 601-855-1747
email: jeff582@bellsouth.net
PROJECT NO.: 12009 - STY

Madison County D

3/17/2024, 12:23:18 PM

1:2,257

0 0.01 0.03 0.06 m

0 0.03 0.05 0.1 l

World Street Map

Lotlines

Parcels

CountyBoundary

madison_ms_parnums

madison_ms_all_txt

Esri, HERE, Garmin, INCREMENT P, NGA, USGS, Esri, HERE, OpenStreetMap contributors, and the GIS user community, Esri, HE GeoTechnologies, Inc., USGS, EPA

Esri, HERE, Garmin, GeoTechnologies, Inc., USGS, EPA | Esri, HERE, Garmin, INCREMENT P, NGA, USGS | Esri, HERE, Garmin, USGS, NGA, EPA,

"E"

SITE PLAN

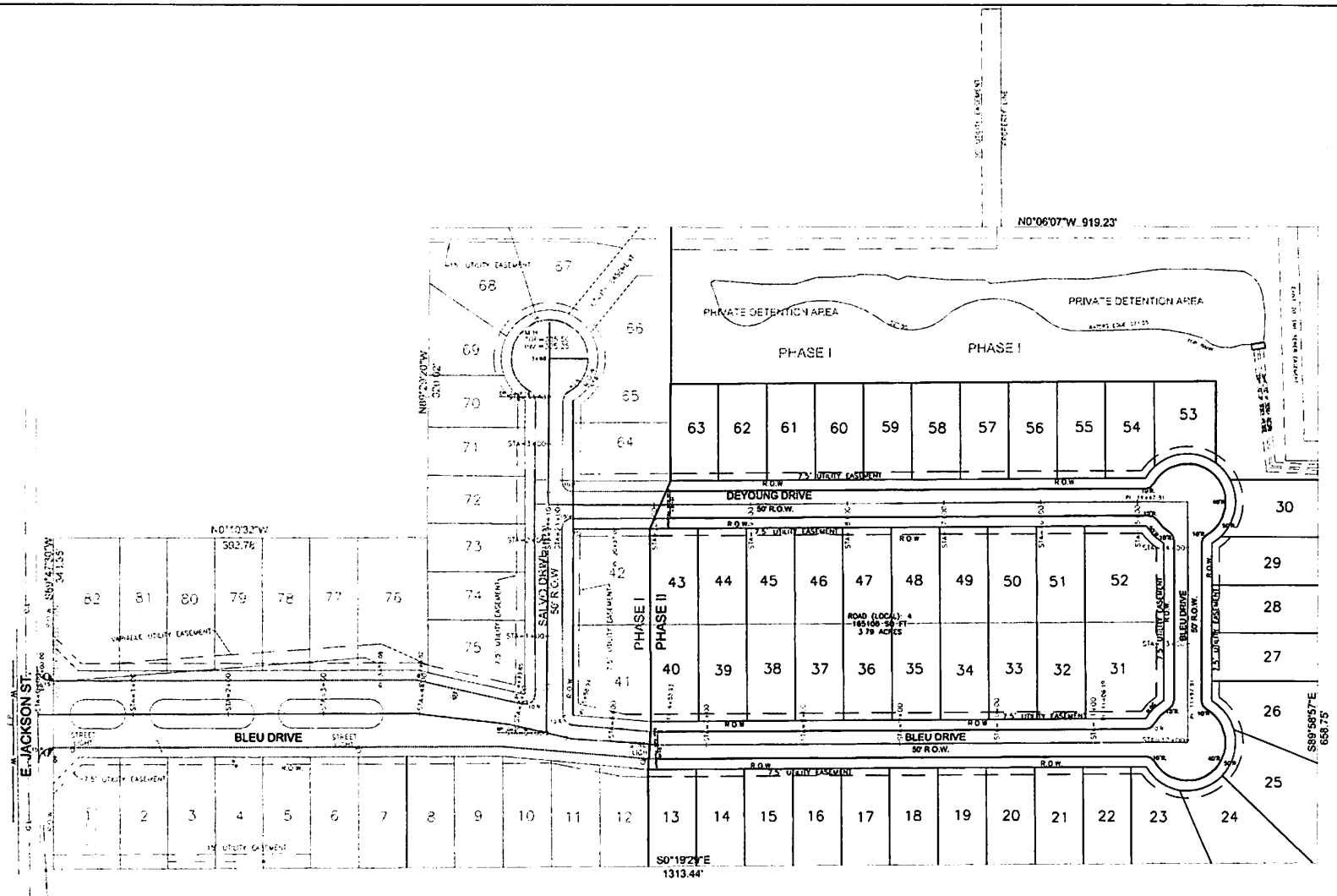

REV.	DESCRIPTION OF REVISION	BY	REVISION DATE
0	ISSUED FOR REVIEW	MJA	1/31/24

Alford and Associates
Consulting Engineers
7112 Suite B Sowell Road
Byram, Mississippi 39272

SITE PLAN – EXHIBIT E

MAISON BLEU SUBDIVISION PHASE II
RIDGELAND, MISSISSIPPI

PROJECT No.

CAD FILE NAME

DRAWING 1

RESOLUTION OF THE MAYOR AND BOARD OF ALDERMEN OF THE CITY OF RIDGELAND, MADISON COUNTY, MISSISSIPPI DENYING THE PETITION AND APPLICATION FOR DIMENSIONAL VARIANCE IN REGARD TO THE PETITION OF SCM DEVELOPMENT, LLC FOR PROPERTY LOCATED NORTH OF JACKSON STREET AND MAISON BLEU SUBDIVISION BEING IDENTIFIED AS PARCEL NO. 072D-19D-076/03.00, IN THE CITY OF RIDGELAND, MADISON COUNTY, MISSISSIPPI

WHEREAS, SCM Development, LLC (the "Petitioner") did file a Petition and Application for Dimensional Variance to reduce the required minimum 25-foot front and 20-foot rear yard setbacks to 15-foot front and 10-foot rear yard setbacks on the subject property; and,

WHEREAS, the Mayor and Board of Aldermen referred the Petition to the Zoning Board of the City of Ridgeland (the "Zoning Board"), which Board scheduled a hearing on said Petition for December 5, 2024, at 6:00 o'clock p.m.; and,

WHEREAS, the City Clerk did cause notice of the December 5, 2024, hearing to be published in the Madison County Journal, a newspaper published in the City of Ridgeland, Madison County, Mississippi, in the manner and for the time required by law, and the Zoning Administrator did post notice of same upon the affected property in the manner and for the time required by law; and,

WHEREAS, the Petitioner did provide evidence that the Petitioner had mailed notice of hearing to adjoining property owners; and,

WHEREAS, the Zoning Board of the City of Ridgeland, Mississippi, did conduct a full and complete hearing on the Petition at the December 5, 2024, meeting, and received comments and heard evidence presented by the Petitioner and thereafter forwarded its recommendation thereon to the Mayor and Board of Aldermen; and,

WHEREAS, the Mayor and Board of Aldermen are familiar with the property and existing land uses within the City of Ridgeland and in the area of the city where the property is located and in acting on this Resolution, have duly considered the matters and facts within their personal knowledge as same affect the land uses requested in the Petition filed herein; and,

WHEREAS, at the conclusion of the discussion of the Zoning Board's recommendation, the Mayor asked whether the Board of Aldermen desired to take any action regarding the Petition and the recommendation of the Zoning Board, and after discussion thereof, Alderman _____ offered the following Resolution and moved that it be adopted, to-wit:

IT IS, THEREFORE, RESOLVED by the Mayor and Board of Aldermen of the City of Ridgeland, Madison County, Mississippi, as follows: to-wit:

SECTION 1. That the matters and facts stated in the preamble hereof are found, determined and adjudicated to be true and correct.

SECTION 2. The property affected by this Resolution is located in the City of Ridgeland, Madison County, Mississippi, and described as:

> 7.637 ACRES OR 332687.07 SQFT., MORE OR LESS, AND BEING PART OF LOTS 1 AND 4 OF BLOCK 18, HIGHLAND COLONY SUBDIVISION, A SUBDIVISION ACCORDING TO THE MAP OR PLAT OF WHICH IS ON FILE IN THE OFFICE OF THE CHANCERY CLERK, MADISON COUNTY, MISSISSIPPI, SAID PARCEL IS LOCATED IN THE SOUTHEAST QUARTER OF THE SOUTHEAST QUARTER OF SECTION 19, TOWNSHIP 7 NORTH, RANGE 2 EAST, CITY OF RIDGELAND, MADISON COUNTY, MISSISSIPPI AND BEING MORE PARTICULARLY DESCRIBED AS FOLLOWS, TO WIT;
>
> COMMENCING AT A FOUND CONCRETE MONUMENT MARKING THE NORTHEAST CORNER OF THE SOUTHEAST QUARTER OF SECTION 19, TOWNSHIP 7 NORTH, RANGE 2 EAST, CITY OF RIDGELAND, MADISON COUNTY, MISSISSIPPI;
>
> THENCE PROCEED SOUTH 00°18' 48" EAST FOR A DISTANCE OF 1,321.95 FEET TO A FOUND CONCRETE MONUMENT AND THE POINT OF

BEGINNING OF THE FOLLOWING DESCRIBED PARCEL OF LAND;

THENCE S 00°19'29" E A DISTANCE OF 693.15 FEET TO A FOUND 1 /2" REBAR;

THENCE S 89°40'33" W A DISTANCE OF 100.00 FEET TO A FOUND 1 /2" REBAR ON THE EAST RIGHT-OF-WAY LINE OF BLEU DRIVE, A PAVED PUBLIC ROAD AS NOW LAID OUT AND IN USE THIS DATE (SEPTEMBER 2023);

THENCE LEAVING SAID EAST RIGHT-OF-WAY LINE OF BLEU DRIVE, RUN N 86°35'39" W A DISTANCE OF 50.11 FEET TO A FOUND 1 /2" REBAR ON THE WEST RIGHT-OF-WAY LINE OF SAID BLEU DRIVE;

THENCE LEAVING SAID WEST RIGHT-OF-WAY LINE OF BLEU DRIVE, RUN S 89°40'31" W A DISTANCE OF 200.00 FEET TO A FOUND 1/2" REBAR ON THE EAST RIGHT-OF-WAY LINE OF DEYOUNG DRIVE, A PAVED PUBLIC ROAD AS NOW LAID OUT AND IN USE THIS DATE (SEPTEMBER 2023);

THENCE LEAVING SAID EAST RIGHT-OF-WAY LINE OF DEYOUNG DRIVE, RUN N 66°21'08" W A DISTANCE OF 54.79 FEET TO A FOUND 1/2" REBAR ON THE WEST RIGHT-OF-WAY LINE OF SAID DEYOUNG DRIVE;

THENCE LEAVING SAID WEST RIGHT-OF-WAY LINE OF DEYOUNG DRIVE, RUN N 89°48'31" W A DISTANCE OF 100.00 FEET TO A FOUND 1 /2" REBAR;

THENCE N 00°19'28" W A DISTANCE OF 564.10 FEET TO A FOUND 1 /2" RE BAR;

THENCE N 90°00'00" E A DISTANCE OF 84.81 FEET TO A FOUND 1 /2" REBAR ON SAID WEST RIGHT-OF-WAY LINE OF DEYOUNG DRIVE;

THENCE CONTINUE ALONG SAID WEST RIGHT-OF-WAY LINE WITH A CURVE TURNING TO THE RIGHT WITH AN ARC LENGTH OF 22.52 FEET, A RADIUS OF 50.00 FEET, A CHORD BEARING OF N 48°57'31" E, AND A CHORD LENGTH OF 22.33 FEET TO A FOUND 1 /2" REBAR;

THENCE LEAVING SAID WEST RIGHT-OF-WAY LINE OF DEYOUNG DRIVE, RUN N 00°01’03" E A DISTANCE OF 90.92 FEET TO A FOUND 1/2" REBAR;

THENCE S 89°58'57" E A DISTANCE OF 397.79 FEET BACK TO THE POINT

OF BEGINNING OF THE ABOVE DESCRIBED PARCEL OF LAND CONTAINING 7.637 ACRES OR 332687.07 SQFT., MORE OR LESS.

SECTION 3. That the petition of SCM Development, LLC for Dimensional Variance on the property described herein, be and same is hereby denied.

SO RESOLVED BY THE MAYOR AND BOARD OF ALDERMEN of the City of Ridgeland, Madison County, Mississippi, at a regular meeting thereof held on the ___ day of _____, 2024.

The motion to adopt the above and foregoing Resolution was seconded by Alderman _____, and the foregoing Resolution was submitted to the Board of Aldermen for passage or rejection on roll call vote with the following result:

Alderman Ken Heard (Ward 1) voted:	_____
Alderman Chuck Gautier (Ward 2) voted:	_____
Alderman Kevin Holder (Ward 3) voted:	_____
Alderman Brian Ramsey (Ward 4) voted:	_____
Alderman Bill Lee (Ward 5) voted:	_____
Alderman Wesley Hamlin (Ward 6) voted:	_____
Alderman D. I. Smith (At large) voted:	_____

Whereupon, the Mayor declared the motion carried and the resolution adopted.

The foregoing resolution is approved, this the _____ day of _____, 2024.

_____
Gene F. McGee, Mayor of the
City of Ridgeland, Mississippi

Attest:

_____
Paula Tierce, City Clerk

[S E A L]

ORDER OF THE MAYOR AND BOARD OF ALDERMEN OF THE CITY OF RIDGELAND, MADISON COUNTY, MISSISSIPPI APPROVING AND GRANTING PETITION AND APPLICATION FOR DIMENSIONAL VARIANCE IN REGARD TO THE PETITION OF SCM DEVELOPMENT, LLC FOR PROPERTY LOCATED NORTH OF JACKSON STREET AND MAISON BLEU SUBDIVISION BEING IDENTIFIED AS PARCEL NO. 072D-19D-076/03.00 IN THE CITY OF RIDGELAND, MADISON COUNTY, MISSISSIPPI

WHEREAS, SCM Development (the "Petitioner") did file a Petition and Application for Dimensional Variance to reduce the required minimum 25-foot front and 20-foot rear yard setbacks to 15-foot front and 10-foot rear yard setbacks on the subject property; and,

WHEREAS, the Mayor and Board of Aldermen referred the Petition to the Zoning Board of the City of Ridgeland (the "Zoning Board"), which Board scheduled a hearing on said Petition for December 5, 2024, at 6:00 o'clock p.m.; and,

WHEREAS, the City Clerk did cause notice of the December 5, 2024, hearing to be published in the Madison County Journal, a newspaper published in the City of Ridgeland, Madison County, Mississippi, in the manner and for the time required by law, and the Zoning Administrator did post notice of same upon the affected property in the manner and for the time required by law; and,

WHEREAS, the Zoning Board of the City of Ridgeland, Mississippi, did conduct a full and complete hearing on the Petition at the December 5, 2024, meeting, and received comments and heard evidence presented by the Petitioner and all others who appeared at said hearing and thereafter forwarded its recommendation thereon to the Mayor and Board of Aldermen; and,

WHEREAS, the Mayor and Board of Aldermen are familiar with the property and existing land uses within the City of Ridgeland and in the area of the city where the property is

located and in acting on this Order, have duly considered the matters and facts within their personal knowledge as same affect the land uses requested in the Petition filed herein; and,

WHEREAS, at the conclusion of the discussion of the Zoning Board's recommendation, the Mayor asked whether the Board of Aldermen desired to take any action regarding the Petition and the recommendation of the Zoning Board, and after discussion thereof, Alderman _____ offered the following Order and moved that it be adopted, to-wit:

NOW, THEREFORE, be it ordered by the Mayor and Board of Aldermen of the City of Ridgeland, Madison County, Mississippi as follows, to-wit:

SECTION 1. That the matters and facts stated in the preamble hereof are found, determined, and adjudicated to be true and correct.

SECTION 2. That a dimensional variance be, and same is hereby granted from the dimensional requirements of Section 250.04 of the Zoning Regulations Ordinance of the City of Ridgeland, allowing the minimum setback distances – 15-foot front and 10-foot rear yard setbacks on the subject property in the City of Ridgeland, Mississippi.

SECTION 3. The property affected by this Order is located in the City of Ridgeland, Madison County, Mississippi and described as:

> 7.637 ACRES OR 332687.07 SQFT., MORE OR LESS, AND BEING PART OF LOTS 1 AND 4 OF BLOCK 18, HIGHLAND COLONY SUBDIVISION, A SUBDIVISION ACCORDING TO THE MAP OR PLAT OF WHICH IS ON FILE IN THE OFFICE OF THE CHANCERY CLERK, MADISON COUNTY, MISSISSIPPI, SAID PARCEL IS LOCATED IN THE SOUTHEAST QUARTER OF THE SOUTHEAST QUARTER OF SECTION 19, TOWNSHIP 7 NORTH, RANGE 2 EAST, CITY OF RIDGELAND, MADISON COUNTY, MISSISSIPPI AND BEING MORE PARTICULARLY DESCRIBED AS FOLLOWS, TO WIT;
>
> COMMENCING AT A FOUND CONCRETE MONUMENT MARKING THE NORTHEAST CORNER OF THE SOUTHEAST QUARTER OF SECTION 19, TOWNSHIP 7 NORTH, RANGE 2 EAST, CITY OF RIDGELAND, MADISON

COUNTY, MISSISSIPPI;

THENCE PROCEED SOUTH 00°18' 48" EAST FOR A DISTANCE OF 1,321.95 FEET TO A FOUND CONCRETE MONUMENT AND THE POINT OF BEGINNING OF THE FOLLOWING DESCRIBED PARCEL OF LAND;

THENCE S 00°19'29" E A DISTANCE OF 693.15 FEET TO A FOUND 1 /2" REBAR;

THENCE S 89°40'33" W A DISTANCE OF 100.00 FEET TO A FOUND 1 /2" REBAR ON THE EAST RIGHT-OF-WAY LINE OF BLEU DRIVE, A PAVED PUBLIC ROAD AS NOW LAID OUT AND IN USE THIS DATE (SEPTEMBER 2023);

THENCE LEAVING SAID EAST RIGHT-OF-WAY LINE OF BLEU DRIVE, RUN N 86°35'39" W A DISTANCE OF 50.11 FEET TO A FOUND 1 /2" REBAR ON THE WEST RIGHT-OF-WAY LINE OF SAID BLEU DRIVE;

THENCE LEAVING SAID WEST RIGHT-OF-WAY LINE OF BLEU DRIVE, RUN S 89°40'31" W A DISTANCE OF 200.00 FEET TO A FOUND 1/2" REBAR ON THE EAST RIGHT-OF-WAY LINE OF DEYOUNG DRIVE, A PAVED PUBLIC ROAD AS NOW LAID OUT AND IN USE THIS DATE (SEPTEMBER 2023);

THENCE LEAVING SAID EAST RIGHT-OF-WAY LINE OF DEYOUNG DRIVE, RUN N 66°21'08" W A DISTANCE OF 54.79 FEET TO A FOUND 1/2" REBAR ON THE WEST RIGHT-OF-WAY LINE OF SAID DEYOUNG DRIVE;

THENCE LEAVING SAID WEST RIGHT-OF-WAY LINE OF DEYOUNG DRIVE, RUN N 89°48'31" W A DISTANCE OF 100.00 FEET TO A FOUND 1 /2" REBAR;

THENCE N 00°19'28" W A DISTANCE OF 564.10 FEET TO A FOUND 1 /2" RE BAR;

THENCE N 90°00'00" E A DISTANCE OF 84.81 FEET TO A FOUND 1 /2" REBAR ON SAID WEST RIGHT-OF-WAY LINE OF DEYOUNG DRIVE;

THENCE CONTINUE ALONG SAID WEST RIGHT-OF-WAY LINE WITH A CURVE TURNING TO THE RIGHT WITH AN ARC LENGTH OF 22.52 FEET, A RADIUS OF 50.00 FEET, A CHORD BEARING OF N 48°57'31" E, AND A CHORD LENGTH OF 22.33 FEET TO A FOUND 1 /2" REBAR;

THENCE LEAVING SAID WEST RIGHT-OF-WAY LINE OF DEYOUNG

DRIVE, RUN N 00°01’03" E A DISTANCE OF 90.92 FEET TO A FOUND 1/2" REBAR;

THENCE S 89°58'57" E A DISTANCE OF 397.79 FEET BACK TO THE POINT OF BEGINNING OF THE ABOVE DESCRIBED PARCEL OF LAND CONTAINING 7.637 ACRES OR 332687.07 SQFT., MORE OR LESS.

SECTION 4. That it is hereby found and determined that the conditions precedent to the granting of a dimensional variance as required in Section 600.08 of the City of Ridgeland Zoning Regulations Ordinance of February 2014, exist, and have been satisfied in regard to the granting of the dimensional variance described herein.

SECTION 5. That, with the sole exception of the dimensional variance granted herein, the property shall be subject to all of the provisions of the City of Ridgeland Zoning Regulations Ordinance of February, 2014.

ORDERED, ADOPTED AND APPROVED by the Mayor and Board of Aldermen of the City of Ridgeland, Madison County, Mississippi at a regular meeting thereof held on the _____ day of _____, 2024.

The motion for adoption was seconded by Alderman _____ and the foregoing Order having been first reduced to writing, was submitted to the Board of Aldermen for passage or rejection on roll call vote with the following results:

Alderman Ken Heard (Ward 1) voted: _____
Alderman Chuck Gautier (Ward 2) voted: _____
Alderman Kevin Holder (Ward 3) voted: _____
Alderman Brian Ramsey (Ward 4) voted: _____
Alderman Bill Lee (Ward 5) voted: _____
Alderman Wesley Hamlin (Ward 6) voted: _____
Alderman D.I. Smith (At large) voted: _____

Whereupon, the Mayor declared the motion carried and the Order adopted.

The foregoing Order is approved, this the _____ day of _____, 2024.

_____
Gene F. McGee, Mayor of the
City of Ridgeland, Mississippi

ATTEST:

_____
Paula Tierce, City Clerk

(S E A L)

DEVELOPMENT AGREEMENT

(Maison Bleu Development)

This Development Agreement ("Agreement") is entered into as of the date last signed below ("Effective Date"), by and between **SCM Development, LLC, a Mississippi limited liability company** ("SCM"), **MBII Developers, LLC, a Mississippi limited liability company** ("MBII"), and **The City of Ridgeland, a Mississippi municipality** ("City").

WHEREAS, SCM is the developer of Maison Bleu Subdivision, Phase I ("Phase I"), which is depicted on the subdivision plat recorded in Plat Book F at Slide 14A of the Madison County land records ("Phase I Plat");

WHEREAS, SCM owns the land adjacent to the northern boundary line of Phase I and desires to sell such adjacent land to MBII;

WHEREAS, MBII desires to purchase such adjacent land from SCM for the purpose of developing Phase II of the Maison Bleu Subdivision ("Phase II") in material conformity with the draft preliminary plat attached hereto as **Exhibit "A"** ("Phase II Plat");

WHEREAS, all of the lots in Phase I have been sold to and are now occupied by residential owners, and SCM has completed all development work in Phase I;

WHEREAS, MBII intends to acquire the adjacent land and commence development work on Phase II;

WHEREAS, the City has made this Development Agreement a condition to approval of the preliminary plat and construction plans for Phase II ("Construction Plans");

WHEREAS, in order to coordinate the completion of Phase I and Phase II, to avoid repeating problems that were encountered during the development of Phase I, to avoid future disputes, to protect the property values of the residents of Maison Bleu, to protect MBII's future investment costs and efforts in developing Phase II, to generally benefit the residents of the developments and the citizens of the City, and to obtain the City's approval of Phase II, SCM and MBII hereby desire to provide assurances related to the development of Phase I and Phase II.

NOW THEREFORE, for and in consideration of the mutual benefits and the respective obligations contained herein, and other good and valuable consideration, the receipt and sufficiency of which are hereby acknowledged, the undersigned parties agree as follows:

1. **Completion of Phase I**. The City acknowledges and agrees that SCM has completed, to the satisfaction and approval of the City, the development work for Phase I that is specified in the letter dated May 19, 2023, titled "Maison Bleu" from the City's attorney and addressed to SCM, a copy of which is attached hereto as **Exhibit "B"**. For the avoidance of doubt, MBII shall have no liability, duty, or obligation whatsoever arising from or related to Phase I, including without limitation past or future development work on Phase I.

2. **Development of Phase II**. The development of Phase II shall comply with the following terms and conditions:

a. Phasing. Phase II is the second and final phase of Maison Bleu. MBII will develop Phase II at one time, not in multiple phases.

b. Mitigation of Construction Impacts.

i. Construction Access and Traffic Management. SCM, for the benefit of itself and its successors in title (including MBII), has obtained an Easement Agreement from Litchfield 588-B, LLC, the owner of the property lying between Maison Bleu and Century Place road, which provides a thirty (30) foot wide construction access easement northward from Phase II to Century Place road ("Construction Easement") and fifteen (15) foot wide utility easement for the installation of a water line northward from Phase II to the main water line located along Century Place ("Waterline Easement"). The Construction Easement and Waterline Easement are depicted on the attached Phase II Plat. All construction traffic related to the development of Phase II shall be limited solely to the Construction Easement. In order to protect the homeowners in Phase I, no Phase II construction traffic will travel through the existing Phase I area (including along Bleu Drive, Salvo Drive, or De Young Drive), and all construction traffic shall be limited to the hours of 7:00 am through 6:00 pm, Monday through Saturday, but with extended hours through 7:00pm during daylight savings time. MBII will construct a temporary barricade running east to west along the boundary line between Phase II and Phase I in order to prevent construction traffic and litter from traveling through Phase I.

ii. Litter and Erosion Control. MBII will monitor the Phase II construction site and area adjacent to the temporary barricade between Phase I and Phase II, and will promptly cleanup any construction litter that passes the barricade onto any part of Phase I. MBII will implement erosion control measures to prevent any erosion sediment from depositing onto of any Phase I property or any other adjacent property. Upon completion of the development construction and prior to recording of the final Plat of Phase II, MBII will place wattles at all curb inlets to prevent silt from entering storm drain inlets. During the home building phase, any homebuilders will monitor and clean the streets as needed, will implement erosion control measures such as silt fencing in order to prevent mud from entering the streets, and will be responsible for pickup and haul away of any construction debris and litter.

c. Secondary Water Line. As required by the City of Ridgeland, the fifteen (15) foot wide Waterline Easement has been obtained in the area depicted on **Exhibit "A"** to allow for installation of a secondary water line running northward from Phase II to the existing main waterline located along Century Place. The Waterline Easement connects to an additional utility easement located between Lots 24 and 25 of Phase II as shown on the Phase II Plat.

d. Retaining Wall and Drainage.

i. Retaining Wall. MBII will build a retaining wall running north-south along the rear boundary lines of Lots 13 through 24 of Phase II. Exact retaining wall plans will be determined during construction and stamped engineering plans for the wall will be provided to the City of Ridgeland at that time. The design and construction of the retaining wall will include a drainage system designed to capture and properly direct the drainage of water flowing from the adjacent properties to the east. This drainage system will include at least five (5) catch basins which drain into drain pipes located in the private drainage easements (described below). Water captured in the wall's catch basins will be directed to flow into the private drainage easements and from there will flow into the master storm drainage system and ultimately into the Private Detention Area shown on the Phase I Plat. The covenants for Phase II will require the subject Lot owners to maintain the retaining wall as needed to maintain proper functioning of the wall and the drainage systems incorporated into the wall.

ii. Private Drainage Easements. All Lots located east of DeYoung Drive or north of Bleu Drive will be subject to five (5) foot wide private drainage easements centered on the boundary lines between each Lot (with two and a half (2 ½) feet of such easement located on each Lot) as shown on the Phase II Plat. In addition, all Lots along the eastern boundary line of Phase II are subject to a fifteen (15) foot wide private drainage easement running along the rear boundary lines of such Lots as shown on the Phase II Plat. The covenants for Phase II will require the subject Lot owners to maintain the private drainage easements as needed to maintain proper drainage of stormwater and groundwater and will direct that the responsibility and cost of maintenance of the private drainage easements shall be borne by the subject Lot owners.

e. Setbacks. The Phase II Covenants and Phase II Plat will provide that the setbacks for all lots will be as follows: front - fifteen (15) feet; side – five (5) feet; and, rear – ten (10) feet, except that Lots 13 through 24 (all lots along the eastern boundary line of Phase II) will be subject to a fifteen (15) foot rear setback to facilitate the drainage plan.

f. Utility Easements. All required utility easements will be shown on the Phase II Plat prior to the City's approval of the final Plat. The utility easement previously located between Lots 53 and 54 has been moved to the common area north of Lot 53 as shown on the updated Phase II Plat. Ownership of all easements will be clearly specified on the final Plat. The City's approval of the final plat shall be deemed the City's acceptance of the sewer, water, and other utility easements and improvements dedicated to the City.

g. Final Surfacing of Streets. MBII will install the final wearing surface of the roads in Phase II at such time as dwellings have been constructed on eighty percent (80%) of the Phase II Lots. Notwithstanding the foregoing, MBII reserves the right to request that the installation of the final wearing surface be delayed for certain reasons, and the City reserves the right to approve or disapprove of such request. The City will accept dedication of the roads as public roads if MBII builds the roads in conformity with the approved construction plans and applicable City ordinances. MBII will warrant the roads for one (1) year against material defects caused by defective workmanship or defective materials.

h. Lighting. MBII will install street lighting in Phase II in a manner reasonably consistent with the street lighting in Phase I and in accordance with a final lighting plan to be shown on Entergy's electrical layout plan, which will be submitted to the City of Ridgeland before installation. Upon approval of the final Plat of the Development and after MBII completes the transfer process with Entergy's billing department, the City will assume responsibility for paying for usage of the street lighting.

i. Phase II Covenants.

i. Annexation; Supplemental Covenants. Subject to the terms and conditions of this Agreement and the Phase II Supplemental Covenants, Phase II will be annexed into the Maison Bleu development. Phase II will be governed by the existing Maison Bleu covenants, except as modified by the proposed Phase II Supplemental Covenants, a draft of which is attached hereto as **Exhibit "C"**. The final recorded version of the Phase II Supplemental Covenants will be materially consistent with the terms and conditions of this Agreement. (The existing covenants and Phase II Supplemental Covenants are referred to herein as the "Phase II Covenants").

ii. Trees. The Phase II Covenants shall require all Lots in Phase II to contain a minimum of two (2) trees, each having a minimum caliper of two (2) inches in diameter, either through the preservation of existing trees of the planting of new trees prior to the issuance of a Certificate of Occupancy.

iii. Design and Architectural Standards. Any homebuilder's design and construction of any dwelling shall comply with all applicable building codes and ordinances of the City and, as provided for in Article Six of the Covenants, is further subject to the design guidelines set forth in the Covenants and review and approval by the Architectural Review Committee of the homeowner's association. Before or after the City's approval of the final Plat, any homebuilder who intends to build dwellings in Phase II may submit its an architectural pattern book showing its conceptual elevation drawings and general home design scheme to the City for review and preliminary approval, in such form and substance as desired by the City. If the City (through its Mayor and Board of Aldermen) gives approval of such builder's architectural pattern book as recorded in the minutes of a board meeting of the Mayor and Board of Alderman, then the City shall not thereafter have the right to disapprove such builder's construction permit application for homes in the Phase II so long as the homebuilder's plans submitted with the permit application comply with the approved architectural pattern book, the design guidelines set forth in the Covenants, and all applicable ordinances relating to the issuance of a building permit. The City reserves the right to approve any deviations from the pattern book.

iv. Rental Terms. As required by the City, the Covenants will include verbatim the leasing restrictions set forth in Section 4 of the attached Phase II Supplemental Covenants.

3. **Coordination of Phase I and Phase II**. SCM and MBII agree to the following terms and conditions applicable to the coordination of Phase I and Phase II:

a. Declarant's Rights and Obligations. SCM shall maintain the declarant's rights and obligations with respect to Phase I. Upon MBII's acquisition of the Phase II land from SCM, SCM shall assign and MBII shall assume the declarant's rights and obligations with respect to Phase II.

b. HOA. The existing Maison Bleu Homeowners Association, Inc. ("HOA") shall serve as the homeowner's association for both Phase I and Phase II, subject however to the terms and conditions of this Agreement and the Phase II Supplemental Covenants. The governance of the HOA shall be in accordance with the Bylaws of Maison Bleu Homeowners Association, Inc. executed by SCM on April 26, 2024. With respect to Phase I, SCM shall cause the HOA to be turned over to the owners of Phase I Lots immediately following SCM's conveyance of the Phase II property to MBII. Notwithstanding anything to the contrary, the HOA and its Board of Directors shall have authority, rights, duties, and obligations for Phase I, and only for Phase I, of Maison Bleu (and not Phase II) until such time as MBII executes an assignment of declarant's rights assigning unto the HOA its declarant's rights and obligations with respect to Phase II. MBII, or its successors or assigns, shall execute such assignment upon the earlier of the following: a) thirty (30) days after a certificate of occupancy is issued for the last dwelling built in Phase II, or b) three (3) years after the effective date of the Phase II Covenants. Upon such assignment of declarant's rights and obligations with respect to Phase II, the HOA shall have the authority and responsibility for the governance of Phase II in accordance with the Covenants and Bylaws in the same manner as it does with respect to Phase I. For the avoidance of doubt, with respect to Phase II, the HOA shall have no authority over Phase II (including the authority to levy assessments) until it receives said assignment of declarant's rights and obligations for Phase II. Notwithstanding anything to the contrary, prior to the turnover of Phase II to the HOA: a) MBII or any builder shall pay the HOA a common area maintenance contribution fee of $100.00 per calendar year for each Phase II Lot owned by MBII or any such builder, and b) any subsequent owner of a Phase II Lot (i.e., an owner that is not a developer or builder) shall pay the HOA an annual common area maintenance contribution fee equal to the same amount as the annual maintenance assessment applicable to a Phase I Lot. Such common area maintenance contribution fees shall be due and payable on January 1 of each year beginning January 1, 2025. The HOA shall use such common area maintenance contribution fees for the maintenance, repair and upkeep of the common areas. After the turnover of Phase II to the HOA, the Phase II Lots shall be subject to the same assessments as Phase I Lots. The final Phase II Supplemental Covenants shall contain terms and conditions consistent with this Section. SCM and MBII will cooperate in good faith and will execute any documents reasonably necessary to effectuate the intent of this Section.

c. Detention Pond Maintenance. The Private Detention Area in Phase I was built by SCM during the development of Phase I and shall be common area of the Maison Bleu subdivision, serving both Phase I and Phase II. Title to the Private Detention Area, which includes the detention pond, was conveyed by SCM to the HOA by a Quitclaim Deed dated August 17, 2023, recorded in Book 4362, Page 168, in the office of the Chancery Clerk of Madison County, Mississippi. The HOA shall be responsible for maintaining the Private Detention Area in such manner to maintain drainage in accordance with the MDEQ approved Stormwater Pollution Prevention Plan. For the avoidance of doubt, MBII shall have no liability, duty, or obligation whatsoever arising from or related to the Detention Area (including the detention pond), including without limitation past or

future construction or maintenance of the Detention Area; provided, however, that MBII shall be responsible for repairing any damage to the Detention Area caused by MBII's development work on Phase II and shall implement control measures to prevent any debris and sediment generated by construction of Phase II from depositing into the Detention Area.

d. Walking Trail. No walking trail has been built in Phase I or Phase II. MBII does not intend to build any walking trail and shall have no liability, duty, or obligation whatsoever arising from or related to any walking trails (whether in Phase I or II), including without limitation past or future construction or maintenance of any walking trails.

e. Entrance and Other Phase I Common Areas. The HOA, at its sole cost and expense, shall maintain the neighborhood entrance feature at the intersection of Bleu Drive and Jackson Street and any other common areas in Phase I or Phase II. For the avoidance of doubt, MBII shall have no liability, duty, or obligation whatsoever arising from or related to any common areas in Phase I, except that MBII shall be responsible for repairing any damage that it causes to common areas in Phase I.

f. Mutual Indemnification.

i. Indemnity for Phase I. SCM shall indemnify, defend, and hold MBII (and its members, managers, employees, subcontractors, agents, and successors and assigns) harmless from and against any and all liabilities, claims, suits, judgments, damages, or losses arising from or related to the development of Phase I, including but not limited to any acts or omissions of SCM (or its members, managers, employees, subcontractors, agents, and successors and assigns) in connection with Phase I, the quality of the workmanship or materials used in Phase I, or any now existing or hereafter arising condition of, on or affecting Phase I (for example, drainage conditions and road quality conditions).

ii. Indemnity for Phase II. MBII shall indemnify, defend, and hold SCM (and its members, managers, employees, subcontractors, agents, and successors and assigns) harmless from and against any and all liabilities, claims, suits, judgments, damages, or losses arising from or related to the development of Phase II, including but not limited to any acts or omissions of MBII (or its members, managers, employees, subcontractors, agents, and successors and assigns) in connection with Phase II, the quality of the workmanship or materials used in Phase II, or any now existing or hereafter arising condition of, on or affecting Phase II (for example, drainage conditions and road quality conditions).

4. **Security and Warranty; Term.** In accordance with Articles 303.04 and 601 of the City's Subdivision Regulations, as a condition to the City's approval of the final Plat, MBII will (a) provide the City with a letter of credit in an amount equal to 1.5 times the estimated cost of the final wearing surface of the roads in Phase II and (b) execute the One Year Warranty in the form required by Article 601 of the Subdivision Regulations. The City must be notified in writing at least sixty (60) days prior to the release of the line of credit. MBII must renew the letter of credit as long as needed to comply with this Agreement and will provide the City with a copy of any such

renewals. The letter of credit will be cancelled and released upon the expiration of the One Year Warranty. The One Year Warranty shall commence upon the City's approval of the final Plat. MBII's obligations under this Agreement shall expire automatically at such time as the One Year Warranty expires. In addition to any other remedies available to the City, if MBII defaults on the performance of its obligations under this Agreement or the One Year Warranty, then the City shall notify MBII in writing of such default, which notice shall identify such default in reasonable detail and provide documentation thereof and state that the City intends to draw on the letter of credit. MBII shall have thirty (30) days after receipt of such notice to cure such default. If MBII fails to cure the default within such time period, then the City may draw on the letter of credit in an amount equal to the cost incurred to cure such default.

5. **General Terms**.

a. Entire Agreement. This Agreement and the exhibits attached hereto contain the entire agreement between the parties, and no written or oral promise, representation, warranty or covenant not included in this Agreement or any such referenced agreements has been or is relied upon by either party.

b. Counterparts. This Agreement shall be executed in any number of counterparts which together shall constitute the agreement of the parties.

c. Successors. This Agreement and the terms and provisions hereof shall inure to the benefit and be binding upon the parties hereto and their respective heirs, executors, personal representatives, successors and assigns whenever the context so requires or permits, including any future owners of any part of the subject property who own with the intent to develop such property into a residential development.

d. Severability. If any provisions of this Agreement are held to be illegal, invalid or unenforceable under present or future laws, such provisions shall be fully severable, and this Agreement shall be construed and enforced as if such illegal, invalid or unenforceable provision had never comprised a part of this Agreement.

e. Default and Remedies. In addition to the City's remedy of drawing on the Letter of Credit under Section 4, in the event a party defaults on the performance of its obligations under this Agreement and fails to cure such default within thirty (30) days after receiving written notice of such default from the other party, then the other party may seek to enforce this Agreement by suit for specific performance.

f. Waiver. Any waiver by a party hereto of any breach of this Agreement of any kind or character whatsoever by the other party, whether such waiver is direct or implied, shall not be construed as a continuing waiver or consent to any subsequent breach of this Agreement on the part of the other party.

g. Authority. The undersigned individuals represent and warrant that they have been duly authorized to sign on behalf of the entity parties to this Agreement.

h. Term. If MBII does not acquire and undertake the development of Phase II, then this Agreement shall be null and void. This Agreement shall expire automatically at such time as the One Year Warranty expires.

IN WITNESS WHEREOF, the parties hereto have duly executed this Agreement as of the Effective Date.

[Signatures appear on the following pages]

MBII Developers, LLC
a Mississippi limited liability company

By:_____ Date: _____

Name: _____

Title: _____

STATE OF _____
COUNTY OF _____

Personally appeared before me, the undersigned authority in and for the said county and state, on this _____ day of _____, 2024, within my jurisdiction, the within named _____, who proved to me on the basis of satisfactory evidence to be the person(s) whose name(s) is/are subscribed in the above and foregoing instrument and acknowledged that he/she/they executed the same in his/her/their representative capacity(ies), and that by his/her/their signature(s) on the instrument, and as the act and deed of the person(s) or entity(ies) upon behalf of which he/she/they acted, executed the above and foregoing instrument, after first having been duly authorized so to do.

_____
Notary Public
Printed Name: _____

My commission expires: _____

(Affix official seal, if applicable)

(*Signature page to Development Agreement – Maison Bleu*)

SCM Development, LLC
a Mississippi limited liability company

By:_____ Date: _____

Name: _____

Title: _____

STATE OF _____
COUNTY OF _____

Personally appeared before me, the undersigned authority in and for the said county and state, on this _____ day of _____, 2024, within my jurisdiction, the within named _____, who proved to me on the basis of satisfactory evidence to be the person(s) whose name(s) is/are subscribed in the above and foregoing instrument and acknowledged that he/she/they executed the same in his/her/their representative capacity(ies), and that by his/her/their signature(s) on the instrument, and as the act and deed of the person(s) or entity(ies) upon behalf of which he/she/they acted, executed the above and foregoing instrument, after first having been duly authorized so to do.

_____
Notary Public
Printed Name: _____

My commission expires: _____

(Affix official seal, if applicable)

(*Signature page to Development Agreement – Maison Bleu*)

The City of Ridgeland

By:_____ Date: _____

Name: _____

Title: _____

STATE OF _____
COUNTY OF _____

Personally appeared before me, the undersigned authority in and for the said county and state, on this _____ day of _____, 2024, within my jurisdiction, the within named _____, who proved to me on the basis of satisfactory evidence to be the person(s) whose name(s) is/are subscribed in the above and foregoing instrument and acknowledged that he/she/they executed the same in his/her/their representative capacity(ies), and that by his/her/their signature(s) on the instrument, and as the act and deed of the person(s) or entity(ies) upon behalf of which he/she/they acted, executed the above and foregoing instrument, after first having been duly authorized so to do.

_____
Notary Public
Printed Name: _____

My commission expires: _____

(Affix official seal, if applicable)

(*Signature page to Development Agreement – Maison Bleu*)

EXHIBIT A
PHASE II PLAT

(ATTACHED)

EXHIBIT B
LETTER DATED MAY 19, 2023
FROM CITY ATTORNEY TO SCM

(ATTACHED)

EXHIBIT C
PHASE II SUPPLEMENTAL COVENANTS

(ATTACHED)

Prepared By:
Matthew Vitart (MS Bar #: 103552)
Reeves, Gentry & Vitart, PLLC
409 W. Parkway Place, Ste. 200
Ridgeland, MS 39157
Phone: 601-898-4420
mvitart@rgvlawms.com

Indexing Instructions:
Part of Lots 6, 7, 8, 9 & 10, Block 92; and
Part of Lot 10, Block 91; and,
Part of Evergreen Street (closed) and Griffith Street (closed)
Map of Town of Ridgeland, being in the NE1/4 of S.19-T.7N-R.2E
Madison County, Mississippi.

Grantor:
Litchfield 588-B, LLC
62 Cooper Square #3B
New York, NY 10003
(212) 421-1412

Grantee:
SCM Development, LLC
108 Aero Smith Drive
Richland, MS 39218
(573) 836-1620

EASEMENT AGREEMENT

This Easement Agreement (this "Agreement") is made and entered into as of the Effective Date (defined below), by and between Litchfield **588-B, LLC, a Colorado limited liability company** ("Grantor") and **SCM Development, LLC, a Mississippi limited liability company** ("Grantee").

1. Background Recitals. Grantor is the owner of the property described on **Exhibit A** attached hereto ("Grantor Property"). Grantee is the owner of the property described on **Exhibit B** attached hereto ("Grantee Property"). Grantee intends to develop the Grantee Property as a residential subdivision (the "Subdivision"). In connection with Grantee's development of the Grantee Property, Grantor has agreed to grant to Grantee certain easement rights over, across and under certain portions of the Grantor Property as set forth in this Agreement. Therefore, for and in consideration of the mutual and reciprocal covenants and agreements contained herein, and other good and valuable consideration, the parties enter this Agreement. The background recitals

in this Section are true and correct in all material respects and form an integral part of this Agreement.

2. Easement Payment. For and in consideration of the easement rights granted by Grantor herein, Grantee shall pay Grantor the sum of **Fifty Thousand and No/100 Dollars ($50,000.00)** (the "Easement Payment"). Grantee shall have until _____, 2024, to deliver the Easement Payment. If Grantee does not deliver the Easement Payment by said date, then this Agreement shall be null and void. The date on which Grantee delivers the Easement Payment to Grantor shall be the Effective Date of this Agreement.

3. Temporary Access Easement for Construction. For and in consideration of the Easement Payment, Grantor hereby grants and conveys to Grantee, for Grantee's use, enjoyment, and benefit, and the use, enjoyment, and benefit of Grantee's employees, agents, contractors, subcontractors, vendors, tenants, invitees, licensees, and successors and assigns with respect to the Grantee Property or any portion thereof (collectively, the "Grantee Beneficiaries"), a temporary, non-exclusive, and appurtenant easement over, under, in, along, and across that portion of the Grantor Property described on **Exhibit C** attached hereto (the "Temporary Easement Area") for the purposes of: (a) constructing installing, operating, using, maintaining, repairing and replacing an unpaved right of way (including clearing, sloping, grading, installing gravel and other necessary appurtenances thereto), and (b) providing temporary vehicular ingress and egress over and across the Temporary Easement Area to the Grantee Property during development of the Grantee Property and construction of homes and improvements thereon (including without limitation, access for heavy vehicles, concrete trucks, trucks hauling heavy equipment such as tractors, dozers, trackhoes/excavators, and any/all vehicles having three (3) or more axles) (the "Temporary Access Easement"). Grantee shall have the right to trim, clear and remove from the Temporary Easement Area all trees, brush, limbs and other obstructions which may interfere with the construction, installation, operation, use, maintenance, repair or replacement of said access right of way. **The Temporary Access Easement shall automatically terminate, be null and void and of no further force or effect and be released of record upon the date that is three (3) years following the Effective Date hereof.** Upon request by Grantor, Grantee shall cause to be recorded in the Madison County land records an instrument evidencing such termination. Immediately following the termination of the Temporary Access Easement, Grantee will remove all debris, surplus material, and construction equipment, and will leave the Temporary Easement Area in a neat and presentable condition in the same condition as it was prior to such construction, except that replanting of trees shall not be required.

4. Perpetual Waterline Easement. For and in consideration of the Easement Payment, Grantor hereby grants and conveys to the Grantee Beneficiaries and the City of Ridgeland, Mississippi, a body politic, a perpetual, non-exclusive, and appurtenant easement over, under, in, along, and across that portion of the Grantor Property described on **Exhibit D** attached hereto (the "Waterline Easement Area") for the purposes of constructing installing, operating, using, maintaining, repairing and replacing a waterline and related improvements within the Waterline Easement Area. Grantee and City of Ridgeland shall have the right to trim, clear and remove from the Waterline Easement Area all trees, brush, limbs and other obstructions which may interfere with the construction, installation, operation, use, maintenance, repair or replacement of

said waterline and related improvements. Immediately following the construction of the waterline and related improvements, Grantee and the City of Ridgeland will promptly remove all debris, surplus material, and construction equipment, and will leave the Waterline Easement Area in a neat and presentable condition in the same condition as it was prior to such construction, except that replanting of trees shall not be required.

5. Cleanup; Repair of Damage. Grantee, at its cost, will promptly clean up any trash or debris from the remainder of Grantor's Property that is attributable to the use of the easements granted herein or the construction on Grantee's Property. In the event any damage is caused to any other part of Grantor's Property arising out of the use of the Temporary Access Easement, Grantee shall be responsible for promptly repairing such damage. If Grantee fails to repair such damage within thirty (30) days after receiving written notice of such damage from Grantor, then Grantor, at its option, may perform such repairs, and Grantee shall then be liable to reimburse Grantor such costs plus a ten percent (10%) penalty.

6. Protection of Existing Creek. Grantee acknowledges the existence of a creek running along eastern edge of the parking lot that is presently located on Grantor's Property. Grantee shall not permit the use of the easements granted herein to obstruct, damage, or pollute this creek.

7. Indemnification. Grantee shall defend, indemnify and hold Grantor harmless from and against any liabilities, costs, expenses, damages, suits, judgments, or the like (including without limitation liability for personal injury or death) arising from the use of the Temporary Access Easement.

8. Insurance. During the term of this Agreement, Grantee shall maintain general liability insurance coverage (including premises and blanket contractual) in an amount of not less than a combined single limit of $1,000,000 per occurrence and $2,000,000 in the aggregate with respect to property damage or injury or death to one or more than one person, insuring against all liabilities of Grantee and all of the liabilities of the Grantee Beneficiaries. Upon request of Grantor from time to time hereunder, Grantee shall provide Grantor with a certificate from its insurer evidencing that its policy is in full force and effect.

9. Reservation. Grantor reserves the right to the full use and enjoyment of the Temporary Easement Area for all lawful purposes that do not interfere with the rights conveyed to Grantee herein; provided, however, Grantor shall not construct any building or other permanent structure within the Temporary Easement Area that may interfere with construction, installation, operation, use, maintenance, repair or replacement of the construction right of way.

10. General Provisions.

a. Recitals. The foregoing recital clauses are true and correct in all material respects and form an integral part of this Agreement, the same as if they were set forth in the numbered paragraphs hereof.

b. Binding Effect. The terms of this Agreement shall inure to the benefit of and be binding upon the parties hereto and their respective successors and assigns which become owners of the Grantor Property, the Grantee Property, the Temporary Easement Area, or any portion thereof.

c. Attorney's Fees. In the event of any dispute concerning enforcement of any provision of this Agreement, the prevailing party shall be entitled to recover its reasonable attorney's fees and costs.

d. Captions; Pronouns. The captions in this Agreement are for convenience only and are not a part of this Agreement and do not in any way limit or amplify the terms and provisions of this Agreement. Whenever the context hereof admits or requires, words in the singular may be regarded as in the plural and vice-versa, and personal pronouns may be read as masculine, feminine and neuter.

e. Severability. Invalidation of any of the provisions contained in this Agreement shall in no way affect any of the other provisions hereof or the application thereof to any other person or entity, and the remainder of this Agreement shall remain in full force and effect.

f. Applicable Law. It is expressly understood and agreed that this Agreement and all questions arising hereunder shall be construed according to the laws of the State of Mississippi.

g. Counterparts. This Agreement may be executed in any number of identical counterparts, any or all of which may contain signatures of fewer than all of the parties but all of which taken together shall constitute a single instrument.

[*Signature Pages Follow*]

IN WITNESS WHEREOF, Grantor has executed this Agreement by and through its duly authorized representative to be effective as of the Effective Date although actually executed on the date set forth below.

GRANTOR:

Litchfield 588-B, LLC,
a Colorado limited liability company

By:_____
Name:_____
As Its:_____

STATE OF _____:
COUNTY OF _____:

Personally appeared before me, the undersigned authority in and for the said county and state, on this ___ day of _____, 20__, within my jurisdiction, the within named _____, who acknowledged that (he)(she) is _____ of _____, a _____ and that for and on behalf of the said entity, and as its act and deed (he)(she) executed the above and foregoing instrument, after first having been duly authorized by said entity so to do.

{SEAL}

_____
NOTARY PUBLIC
My Commission Expires:_____

IN WITNESS WHEREOF, Grantee has executed this Agreement by and through its duly authorized representative to be effective as of the Effective Date although actually executed on the date set forth below.

GRANTEE:

SCM Development, LLC,
a Mississippi limited liability company

By:_____
Name:_____
As Its:_____

STATE OF _____:
COUNTY OF _____:

Personally appeared before me, the undersigned authority in and for the said county and state, on this ___ day of _____, 20__, within my jurisdiction, the within named _____, who acknowledged that (he)(she) is _____ of SCM Development, LLC, a Mississippi limited liability company, and that for and on behalf of the said entity, and as its act and deed (he)(she) executed the above and foregoing instrument, after first having been duly authorized by said entity so to do.

{SEAL}

_____
NOTARY PUBLIC
My Commission Expires:_____

Exhibit A
Grantor Property

A certain parcel of land being a part of Lots 6, 7, 8, 9 and 10, Block 92, part of Lot 10, Block 91, and a part of Evergreen Street (closed) and Griffith Street (closed) according to the map of the Town of Ridgeland, Mississippi, on file and of record in the office of the Chancery Clerk of Madison County at Canton, Mississippi, being situated in the Northeast ¼ of Section 19, T7N-R2E in the City of Ridgeland, Madison County, Mississippi, and being more particularly described as follows:

Commence at a point on the North right-of-way line of the aforesaid Evergreen Street (closed) being the Southeast corner of the aforesaid Lot 10, Block 92, Town of Ridgeland; said point also being on the West line of Trace Ridge Subdivision, Part 1, a subdivision according to the map or plat thereof, on file and of record in the aforesaid Chancery Clerk's office, as now recorded in Plat Cabinet C at Slide 11; and run thence South 00 degrees 22 minutes 00 seconds West along said West line of Trace Ridge Subdivision, Part 1 for a distance of 10.00 feet to a set ½" iron pin marking the POINT OF BEGINNING of the parcel of land herein described; from said POINT OF BEGINNING and leaving said West line of Trace Ridge Subdivision, Part 1, run thence North 89 degrees 41 minutes 41 seconds West for a distance of 700.00 feet to an existing ½" iron pin; run thence North 00 degrees 15 minutes 49 seconds East for a distance of 140.10 feet to an existing pipe; run thence North 16 degrees 07 minutes 14 seconds East for a distance of 135.31 feet to a set cotton picker spindle in an existing retaining wall on the South right-of-way line of Century Place; run thence South 89 degrees 40 minutes 00 seconds East along said South right-of-way line of Century Place for a distance of 663.51 feet to an existing iron pin on the aforesaid West line of Trace Ridge Subdivision, Part 1; leaving said South right-of-way line of Century Place, run thence South 00 degrees 22 minutes 00 seconds West along said West line of Trace Ridge Subdivision, Part 1 for a distance of 269.96 feet to the POINT OF BEGINNING, containing 4.29 acres, more or less.

The above described parcel of land being the same property as described in deed recorded in Deed Book 522 at Page 455, less and except that property as described in deed recorded in Deed Book 1957 at Page 377, on file and of record in the aforesaid Chancery Clerk's office.

Being the same property described in Book 3222 at Page 180.

Exhibit B
Grantee Property

COMMENCING at a found concrete monument marking the Northeast corner of the Southeast Quarter of Section 19, Township 7 North, Range 2 East, City of Ridgeland, Madison County, Mississippi; thence South 00°18'48" East for a distance of 1,321.95 feet to a found ½" rebar; thence South 00°19'29" East for a distance of 693.15 feet to a set ½" X 24" rebar and the POINT OF BEGINNING for the following described parcel of land; thence South 00°19'29" East for a distance of 620.29 feet to a found ½" rebar on the North Right of Way of Jackson Street, a paved public road as now laid out and in use this date (November 2014); thence along said Right of Way run South 89°47'30" West for a distance of 343.35 feet to a found ½" rebar; leaving said Right of Way run North 00°10'32" West for a distance of 392.78 feet to a found ½" rebar; thence North 89° 29'20" West for a distance of 320.02 feet to a found ½" rebar; thence North 00°06'07" West for a distance of 919.23 feet to a found ½" rebar; thence South 89°58'57" East for a distance of 261.14 feet to a set ½" x 24" rebar; thence South 00°01'03" West for a distance of 90.92 feet to a set ½" x 24" rebar; thence along a curve to the left with a radius of 50.00 feet for a distance of 22.52 feet (Chord = South 48°57'31" West – 22.33 feet) to a set ½" x 24" rebar; thence West for a distance of 84.81 feet; thence South 00°19'28" East for a distance of 564.10 feet to a set ½" x 24" rebar; thence South 89°48'31" East for a distance of 100.00 feet to a set ½" x 24" rebar; thence South 66°21'08" East for a distance of 54.79 feet to a set ½" x 24" rebar; thence North 89°40'31" East for 200.00 feet to a set ½" x 24" rebar; thence South 86°35'39" East for a distance of 50.11 feet to a set ½" x 24" rebar; thence North 89°40'33" East for a distance of 100.00 feet back to the POINT OF BEGINNING for the above described parcel of land containing 9.42 acres more or less.

Exhibit C
Temporary Easement Area

Exhibit D
Waterline Easement Area

Exhibit E
Survey

Prepared by and return to:
Matthew T. Vitart, Esq. (MSB# 103552)
Reeves, Gentry & Vitart, PLLC
409 W. Parkway Place, Ste. 200
Ridgeland, MS 39157
(601) 898-4420

Declarant:
SCM Development, LLC
109 Rosedowne Drive
Madison, MS 39110
(____) _____-_____

Indexing Instructions:
Lots 1 and 4, Block 18
Highland Colony Subdivision, and
Maison Bleu Phase II, and
SE1/4 of SE1/4 of S.19, T.7N, R.2E
City of Ridgeland
Madison County, Mississippi

Marginal Notation:
Book 3170, Page 1

SUPPLEMENTAL DECLARATION OF COVENANTS, CONDITIONS AND RESTRICTIONS

FOR

MAISON BLEU, PHASE II

Supplemental Declaration of Covenants, Conditions and Restrictions
For
Maison Bleu, Phase II

This Supplemental Declaration of Covenants, Conditions and Restrictions for Maison Bleu, Phase II ("Supplemental Declaration") is made effective as of _____, 2024, by SCM Development, LLC, a Mississippi limited liability company ("Declarant").

WHEREAS, the Declarant is the developer of the Maison Bleu Subdivision;

WHEREAS, the Declarant previously developed Maison Bleu, Phase I (referred to herein as "Phase I"), as shown on that plat of subdivision recorded in Plat Cabinet F at Slide 14A in the Office of the Chancery Clerk of Madison County, Mississippi. In connection with Phase I, the Declarant adopted that certain Declaration of Covenants, Conditions and Restrictions for Maison Bleu, Phase I recorded in Book 3170 at Page 1 in the Office of the Chancery Clerk of Madison County, Mississippi ("Original Declaration");

WHEREAS, the Declarant owns certain land adjacent to Phase I, which is particularly described on **Exhibit "A"** attached hereto and incorporated herein by reference ("Phase II Property");

WHEREAS, in order for the Phase II Property to be developed into Maison Bleu, Phase II (referred to herein as "Phase II"), Declarant, pursuant to Article II of the Original Declaration, hereby intends to annex and subject the Phase II Property to the provisions of the Original Declaration, subject however, to certain modifications, amendments, additions, and supplementations as specified herein.

NOW, THEREFORE, the Declarant declares as follows:

Section 1. Annexation. Pursuant to Article II of the Original Declaration, Declarant hereby annexes and subjects the Phase II Property (being Maison Bleu, Phase II) to the provisions of the Original Declaration, subject however, to certain modifications, amendments, additions, and supplementations as specified herein. Except as modified herein, the Original Declaration shall remain in full force and effect. The Phase II Property is and shall be owned, leased, held, transferred, assigned, sold, conveyed, used, occupied, hypothecated, encumbered, and improved subject to the provisions of both the Original Declaration and this Supplemental Declaration which: (i) are agreed and declared to be beneficial for and in aid of the development of the residential community and the improvement of the Phase II Property; (ii) shall be deemed appurtenant to the Phase II Property and shall run with and bind the Phase II Property; and, (iii) shall inure to the benefit of and be enforceable by the Declarant, its successors and assigns, and each Person who has or acquires any interest in any portion of the Property or the improvements on the Property, including the Association, any Owner and any Person who holds such interest solely as security for the performance of an obligation or the payment of a debt. To the extent of any conflict between the terms of the Original Declaration and

the terms of this Supplemental Declaration, the terms of this Supplemental Declaration shall control. Any capitalized terms used but not defined in this Supplemental Declaration shall have the meaning ascribed to them in the Original Declaration.

Section 2. Association's Powers and Duties for Phase II. Notwithstanding anything to the contrary herein, in the Declaration, the Bylaws, or otherwise, the powers, authorities, and duties of the Association, Board of Directors, and Architectural Review Committee with respect to Phase II shall be subject to the terms and conditions stated in this Section. The Declarant has reserved and retains all declarant's rights, powers, and privileges with respect to Phase II. The Association, Board of Directors, and Architectural Review Committee shall have powers, authorities, and duties for Phase I, and only for Phase I, (and not for Phase II) until such time as the Declarant (or its successor pursuant to Section 14.07 of the Declaration) executes an assignment of declarant's rights assigning unto the Association the Declarant's rights, powers, and privileges with respect to Phase II. The Declarant shall execute such assignment upon the earlier of the following: a) within thirty (30) days after a certificate of occupancy is issued for the last Dwelling built in Phase II, or b) three (3) years after the effective date of this Supplemental Declaration~~; provided that failure to meet such deadline shall not prevent Declarant from making such assignment at a later date~~. Upon such assignment of declarant's rights with respect to Phase II, the Association, Board of Directors, and Architectural Review Committee shall have the powers, authorities, and duties for the governance, management, and maintenance of Phase II in accordance with the Covenants and Bylaws in the same manner and to the same extent as they do with respect to Phase I. For the avoidance of doubt, with respect to Phase II, the Association, Board of Directors, and Architectural Review Committee shall not have any powers, authorities, or duties whatsoever over or for Phase II (including the authority to levy assessments against any Lots in Phase II) until the Association receives from Declarant said assignment of declarant's rights and obligations for Phase II. However, prior to the turnover of Phase II to the Association: a) Declarant or any developer or builder shall pay the Association a common area maintenance contribution fee of $100.00 per calendar year for each Phase II Lot owned by the Declarant or any such developer or builder, and b) any subsequent owner of a Phase II Lot (i.e., an owner that is not a developer or builder) shall pay the Association an annual common area maintenance contribution fee equal to the same amount as the annual maintenance assessment applicable to a Phase I Lot. Such common area maintenance contribution fees shall be due and payable on January 1 of each year beginning January 1, 2025. The Association shall use such common area maintenance contribution fees for the maintenance, repair and upkeep of the common areas. After the turnover of Phase II to the Association, the Phase II Lots shall be subject to the same assessments as Phase I Lots.

Section 3. Architectural Standards. Attached as **Exhibit "B"** are required architectural features and finishes for Dwellings in Phase II. If a proposed construction plan for a Dwelling in Phase II substantially incorporates such features and finishes, then it shall be deemed consistent with the intended architectural plan for Phase II.

Section 4. Lease of Dwellings. Notwithstanding anything to the contrary, any leasing of Lots or Dwellings in Phase II shall be subject to the terms and conditions stated in this Section. Dwellings and Lots in Phase II may be leased by an Owner for residential purposes only; provided, however, that any such leasing activities shall be subject to the following terms and conditions: (a) any such lease and the rights of any tenants thereunder are hereby made expressly subject to the power of the Association to prescribe reasonable rules and regulations relating to the lease and rental of Lots and Dwellings and to enforce the same directly against such tenant or other occupant by the exercise of such remedies as the Board of Directors deems appropriate, including eviction; (b) no such lease shall be for less than twelve (12) months; (c) all leases must be in writing, with a copy provided to the Association upon request by the Association; (d) an Owner (or in the case of any Owner which is an entity, any affiliate of an Owner or other entity that has common ownership) may own only one leased Dwelling within the Subdivision at any given time; (e) a period of at least one (1) year has elapsed from and after the building permit for that particular Dwelling has been issued, or a period of at least six (6) months has elapsed from and after the final inspection by the appropriate public building inspector has occurred and the certificate of occupancy has been issued, whichever period of time is longer; and, (f) any Owner desiring to lease a Dwelling to a tenant shall have owned the Lot for a period of at least one (1) year prior to the commencement of such lease. Any Owner who leases his Dwelling or any portion thereof shall be responsible for the acts of his tenants, including, without limitation, the violation of this Declaration and/or any rules and regulations promulgated by the Association hereunder. Notwithstanding the foregoing, this Section shall not apply with respect to any Lot subject to a mortgage which is insured or guaranteed by the Federal Housing Administration or the Veterans Administration, or where the provisions of this Section are otherwise prohibited by law. In the event title to a Lot is transferred by foreclosure or deed-in-lieu of foreclosure, or if the mortgage for such Lot is assigned to the Secretary of the U.S. Department of Housing and Urban Development, then any requirements for or restrictions on conveyance included in this Declaration (including without limitation the leasing restrictions imposed by this Section 4) shall be deemed automatically terminated as to such Lot.

Section 5. Setbacks. Setbacks for all Phase II Lots will be as follows: front - fifteen (15) feet; side – five (5) feet; and, rear – ten (10) feet, except that Lots 13 through 24 (all Lots along the eastern boundary line of Phase II) will be subject to a fifteen (15) foot rear setback to facilitate the drainage plan.

Section 6. Trees. All Lots in Phase II shall contain a minimum of two (2) trees, each having a minimum caliper of two (2) inches in diameter, either through the preservation of existing trees or the planting of new trees prior to the issuance of a Certificate of Occupancy. The Builder shall be responsible for compliance with this provision.

Section 7. Private Drainage Easements.

(a) All Lots in Phase II located east of DeYoung Drive or north of Bleu Drive are hereby subject to five (5) foot wide private drainage easements centered on the boundary lines between each Lot (with two and a half (2 ½) feet of such easement located on each Lot) as shown on the Plat of Phase II. The Owners of such Lots shall maintain the private drainage easements as needed to maintain proper drainage of stormwater and groundwater. The responsibility and cost of maintenance of the private drainage easements shall be borne in equal one-half shares by each subject Lot owner.

(b) All Lots along the eastern boundary line of Phase II are hereby subject to fifteen (15) foot wide private drainage easement running along the rear boundary lines of such Lots as shown on the Plat of Phase II. The Owner of each subject Lot shall be solely responsible for maintaining and repairing the portion of the private drainage easement located on their respective Lot as needed to maintain proper drainage of stormwater and groundwater.

(c) A retaining wall, which includes a drainage system incorporated into its design, runs north-south along the rear boundary lines of all Lots along the eastern boundary line of Phase II for the purpose of facilitating proper drainage and preventing erosion and collapse. The wall is located within the fifteen (15) food wide private drainage easement described in the prior subsection. The Owner of each subject Lot shall be solely responsible for maintaining and repairing the portion of the retaining wall located on their respective Lot as needed to maintain proper functioning of the wall and the drainage systems incorporated into the wall.

Section 8. Square Footage. Notwithstanding anything to the contrary, each Dwelling constructed on the Property (being the Lots of Maison Bleu, Phase II) shall have the following square footage: exclusive of porches and garages, the heated and/or cooled living area of each Dwelling, main house or residential structure constructed shall contain at least one thousand eight hundred (1,800) square feet.

(*Remainder of page left blank. Signature page follows.*)

IN WITNESS WHEREOF, the Declarant has executed this Supplemental Declaration of Covenants, Conditions and Restrictions for Maison Bleu, Phase II effective as of _____, 2024.

DECLARANT

SCM Development, LLC,
a Mississippi limited liability company

By: _____
Matt Herfurth, Member and Manager

STATE OF MISSISSIPPI
COUNTY OF _____

Personally appeared before me, the undersigned authority in and for the said county and state, on this _____ day of _____, 2024, within my jurisdiction, the within named Matt Herfurth, who proved to me on the basis of satisfactory evidence to be the person whose name is subscribed in the above and foregoing instrument and acknowledged that he executed the same in his representative capacity, and that by his signature on the instrument, and as the act and deed of the person or entity upon behalf of which he acted, executed the above and foregoing instrument, after first having been duly authorized so to do.

_____
Notary Public
Printed Name: _____

My commission expires: _____ (SEAL)

JOINDER OF ASSOCIATION

Maison Bleu Homeowners Association, Inc., a Mississippi non-profit corporation, whose mailing address is _____, hereby approves and joins in thIS Supplemental Declaration of Covenants, Conditions and Restrictions for Maison Bleu, Phase II and agrees to be bound by the terms thereof and will comply with and perform the terms and conditions thereof.

In Witness Whereof, Maison Bleu Homeowners Association, Inc. has executed this Joinder on this _____ day of _____, 2024.

Maison Bleu Homeowners Association, Inc.,
A Mississippi non-profit corporation

By: _____

Name: _____

It: _____

STATE OF MISSISSIPPI
COUNTY OF _____

Personally appeared before me, the undersigned authority in and for the said county and state, on this _____ day of _____, 2024, within my jurisdiction, the within named _____, who proved to me on the basis of satisfactory evidence to be the person whose name is subscribed in the above and foregoing instrument and acknowledged that he executed the same in his representative capacity, and that by his signature on the instrument, and as the act and deed of the person or entity upon behalf of which he acted, executed the above and foregoing instrument, after first having been duly authorized so to do.

_____
Notary Public
Printed Name: _____

My commission expires: _____ (SEAL)

EXHIBIT A
LEGAL DESCRIPTION OF PHASE II PROPERTY

following described parcel of land containing 7.637 acres or 332687.07 sqft., more or less and being part of Lots 1 and 4 of Block 18, Highland Colony Subdivision, a subdivision according to the map or plat of which is on file in the Office of the Chancery Clerk, Madison County, Mississippi, said parcel is located in the Southeast Quarter of the Southeast Quarter of Section 19, Township 7 North, Range 2 East, City of Ridgeland, Madison County, Mississippi and being more particularly described as follows, to wit;

Commencing at a found concrete monument marking the Northeast corner of the Southeast Quarter of Section 19, Township 7 North, Range 2 East, City of Ridgeland, Madison County, Mississippi; thence proceed South 00°18'48" East for a distance of 1,321.95 feet to a found concrete monument and The Point of Beginning of the following described parcel of land; thence S 00°19'29" E a distance of 693.15 feet to a found 1/2" rebar; thence S 89°40'33" W a distance of 100.00 feet to a found 1/2" rebar on the East Right-of-Way line of Bleu Drive, a paved public road as now laid out and in use this date (September 2023); thence leaving said East Right-of-Way line of Bleu Drive, run N 86°35'39" W a distance of 50.11 feet to a found 1/2" rebar on the West Right-of-Way line of said Bleu Drive; thence leaving said West Right-of-Way line of Bleu Drive, run S 89°40'31" W a distance of 200.00 feet to a found 1/2" rebar on the East Right-of-Way line of Deyoung Drive, a paved public road as now laid out and in use this date (September 2023); thence leaving said East Right-of-Way line of Deyoung Drive, run N 66°21'08" W a distance of 54.79 feet to a found 1/2" rebar on the West Right-of-Way line of said Deyoung Drive; thence leaving said West Right-of-Way line of Deyoung Drive, run N 89°48'31" W a distance of 100.00 feet to a found 1/2" rebar; thence N 00°19'28" W a distance of 564.10 feet to a found 1/2" rebar; thence N 90°00'00" E a distance of 84.81 feet to a found 1/2" rebar on said West Right-of-Way line of Deyoung Drive; thence continue along said West Right-of-Way line with a curve turning to the right with an arc length of 22.52 feet, a radius of 50.00 feet, a chord bearing of N 48°57'31" E, and a chord length of 22.33 feet to a found 1/2" rebar; thence leaving said West Right-of-Way line of Deyoung Drive, run N 00°01'03" E a distance of 90.92 feet to a found 1/2" rebar; thence S 89°58'57" E a distance of 397.79 feet back to The Point of Beginning of the above described parcel of land containing 7.637 acres or 332687.07 sqft., more or less.

EXHIBIT B
RECOMMENDED FEATURES AND FINISHES

EXTERIOR MATERIALS
Brick- exterior walls with Vinyl or Hardie board accents
Siding- Vinyl or Hardie Board – design per plans
Cornish-Vinyl or Hardie
Front Exterior Accents-as per plans
Front exterior door- Wood, Fiberglass with glass
Windows- Vinyl, Vinyl clad, metal clad, wood clad
Shutters- 1x6 Cedar – design per plans
Screen Porch - Treated pine or Cedar, Charcoal vinyl screen, NO ALUMINUM SCREEN.
ROOFING
Roof Pitch- 8/12 minimum
Shingles-Owens Corning Dimensional or equal. Gray, brown, black or blends. NO GREEN, BLUE, RED, TAN OR WHITE SHINGLES.

INTERIOR FINISHES
Ceiling plate height- 9' minimum
Vaults and Trays- As per plan
Interior trim mouldings
- Baseboard throughout home
- Crown moulding per plans
- Door trim - 356 minimum

Interior doors- Raised panel masonite
Countertops/Backsplashes-Granite, quartz, ceramic tile
Flooring- wood, engineered wood, vinyl wood, ceramic tile, carpet, stained concrete
Water Heaters-tankless or tank
Appliances – Gas, Electric or duel fuel

LANDSCAPING
Each home will be professionally landscaped
Each home will have a minimum of 4 shrubs for every 10' of foundation frontage.
Corner lots will have a minimum of 1 shrub for every 6' of foundation frontage facing the side street.
One (1) oak tree to be planted on each lot in front yard set back
All lots to be completely sodded

MAISON BLEU SUBDIVISION, PHASE II

SITUATED IN:

PART OF LOTS 1 AND 4 BLOCK 18, HIGHLAND COLONY SUBDIVISION, BEING SITUATED IN THE SE 1/4 OF THE SE 1/4 SECTION 19, T7N-R2E, CITY OF RIDGELAND, MADISON COUNTY, MISSISSIPPI.

BEARINGS SHOWN ARE GEODETIC BASED ON G.P.S. OBSERVATION

0 100 200 300

SCALE: 1"= 100'

THIS PROPERTY IS SITUATED IN ZONE "X" ACCORDING TO F.I.R.M. NO. 28089C0567F MARCH 17, 2010

This survey meets the Standards of Practice for Surveying set forth by the Mississippi State Board of Licensure for Professional Engineers and Land Surveyors to qualify as a "Class B" survey.
Fieldwork completed on:
February 9, 2024

CURVE	RADIUS	ARC LENGTH	CHORD LENGTH	CHORD BEARING
C1	50.00'	25.88'	25.59'	S 44°50'47" W
C2	50.00'	15.44'	15.38'	N 51°09'20" W
C3	50.00'	68.58'	63.33'	N 03°20'37" W
C4	50.00'	65.35'	60.80'	S 80°41'37" E
C5	50.00'	11.58'	11.55'	S 36°37'03" E
C6	50.00'	38.59'	37.64'	N 52°07'43" E
C7	50.00'	51.90'	49.60'	S 76°01'20" E
C8	50.00'	49.05'	47.10'	S 18°10'53" E
C9	50.00'	43.42'	42.07'	S 34°47'53" W
C10	50.00'	26.48'	26.17'	N 45°09'13" W

LINE	BEARING	DISTANCE
L1	N 89°58'57" W	15.00'
L2	N 89°58'57" W	50.00'
L3	N 89°58'57" W	30.00'
L4	S 89°59'19" E	30.00'
L5	S 89°59'19" E	15.00'

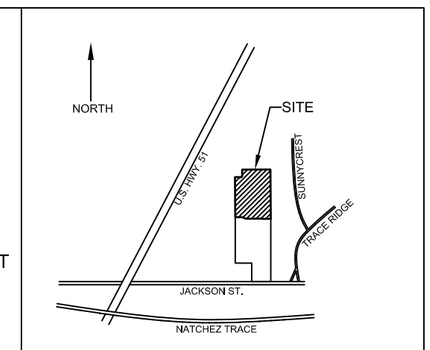

VICINITY MAP
(NOT TO SCALE)

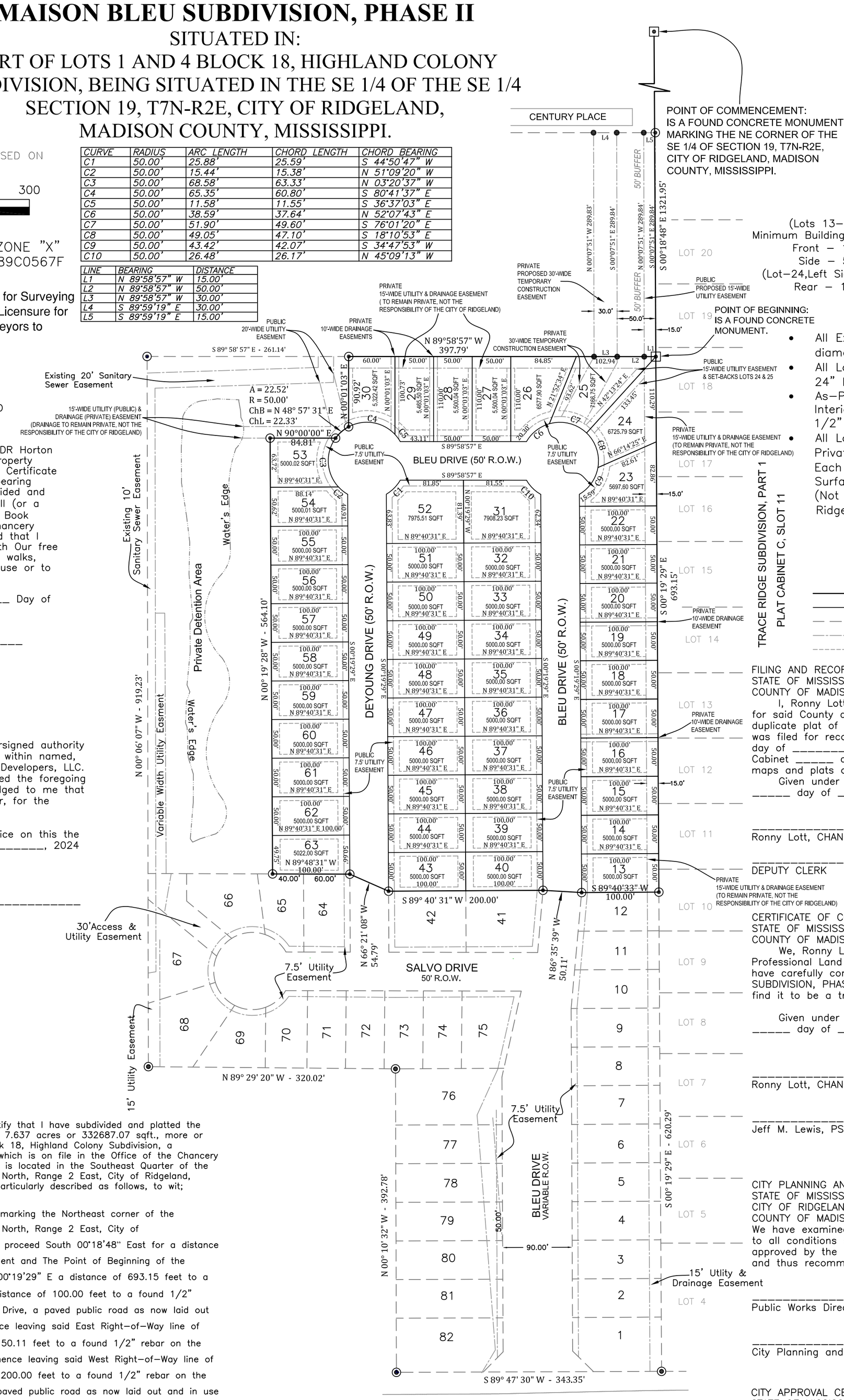

(Lots 13–30) Minimum Building Setbacks
Front – 15'
Side – 5'
(Lot–24,Left Side–7.5')
Rear – 15'

(Lots 25–63) Minimum Building Setbacks
Front – 15'
Side – 5'
(Lot–25,Right Side–7.5')
Rear – 10'

Notes:

- All Exterior Corners are Set with a 4" diameter x 30" Concrete Monument.
- All Lot Corners are Set with 1/2" x 24" Rebar.
- As–Per City of Ridgeland Engineer, All Interior Phase Corners are Set with 1/2" x 24" Rebar.
- All Lots are Subject to a 5' Wide Private Drainage Easement (2.5' Of Each Lot) Along Lot Lines to Allow Surface Drainage of Adjoining Lots (Not the Responsibility of the City of Ridgeland).

LEGEND

- FOUND CONCRETE MONUMENT
- FOUND 1/2" REBAR
- SET 1/2"x18" REBAR
- BOUNDARY
- LOT LINES
- ADJOINING LINES
- EASEMENT
- SETBACKS

OWNER'S CERTIFICATE OF OWNERSHIP AND DEDICATION
STATE OF MISSISSIPPI
COUNTY OF MADISON

I, Steven French do hereby certify that DR Horton Inc. – Birmingham, the Owner of the property shown on the Plat and described in the Certificate of Jeff M. Lewis, the Land Surveyor appearing hereon; have caused same to be subdivided and platted as shown; and the property is all (or a part of) that tract as recorded in Deed Book 2764 Page 576, in the office of the Chancery Clerk of Madison County, Mississippi; and that I hereby adopt this plan of subdivision with Our free consent, and dedicate all streets, alleys, walks, parks and other open spaces to public use or to private use as noted.

WITNESS MY SIGNATURE on this the ____ Day of _____, 2024

_____
Steven French
DR Horton Inc. – Birmingham

ACKNOWLEDGMENT OF SIGNATURES
STATE OF MISSISSIPPI
CITY OF RIDGELAND
COUNTY OF MADISON

Personally appeared before me the undersigned authority in and for the jurisdiction aforesaid, the within named, Sid Robinson, managing partner of SCM Developers, LLC. who acknowledges to me that he executed the foregoing instrument as Owner, and who acknowledged to me that he executed Jeff M. Lewis, Land Surveyor, for the purpose therein contained.

Witness my hand and official seal of office on this the _____ day of _____, 2024

My Commission Expires:

_____
NOTARY PUBLIC

CERTIFICATES OF PERFORMANCE
SURVEYOR' S CERTIFICATE
STATE OF MISSISSIIPPI
COUNTY OF MADISON

I, Jeff M. Lewis Land Surveyor do hereby certify that I have subdivided and platted the following described parcel of land containing 7.637 acres or 332687.07 sqft., more or less and being part of Lots 1 and 4 of Block 18, Highland Colony Subdivision, a subdivision according to the map or plat of which is on file in the Office of the Chancery Clerk, Madison County, Mississippi, said parcel is located in the Southeast Quarter of the Southeast Quarter of Section 19, Township 7 North, Range 2 East, City of Ridgeland, Madison County, Mississippi and being more particularly described as follows, to wit;

Commencing at a found concrete monument marking the Northeast corner of the Southeast Quarter of Section 19, Township 7 North, Range 2 East, City of Ridgeland, Madison County, Mississippi; thence proceed South 00°18'48" East for a distance of 1,321.95 feet to a found concrete monument and The Point of Beginning of the following described parcel of land; thence S 00°19'29" E a distance of 693.15 feet to a found 1/2" rebar; thence S 89°40'33" W a distance of 100.00 feet to a found 1/2" rebar on the East Right–of–Way line of Bleu Drive, a paved public road as now laid out and in use this date (September 2023); thence leaving said East Right–of–Way line of Bleu Drive, run N 86°35'39" W a distance of 50.11 feet to a found 1/2" rebar on the West Right–of–Way line of said Bleu Drive; thence leaving said West Right–of–Way line of Bleu Drive, run S 89°40'31" W a distance of 200.00 feet to a found 1/2" rebar on the East Right–of–Way line of Deyoung Drive, a paved public road as now laid out and in use this date (September 2023); thence leaving said East Right–of–Way line of Deyoung Drive, run N 66°21'08" W a distance of 54.79 feet to a found 1/2" rebar on the West Right–of–Way line of said Deyoung Drive; thence leaving said West Right–of–Way line of Deyoung Drive, run N 89°48'31" W a distance of 100.00 feet to a found 1/2" rebar; thence N 00°19'28" W a distance of 564.10 feet to a found 1/2" rebar; thence N 90°00'00" E a distance of 84.81 feet to a found 1/2" rebar on said West Right–of–Way line of Deyoung Drive; thence continue along said West Right–of–Way line with a curve turning to the right with an arc length of 22.52 feet, a radius of 50.00 feet, a chord bearing of N 48°57'31" E, and a chord length of 22.33 feet to a found 1/2" rebar; thence leaving said West Right–of–Way line of Deyoung Drive, run N 00°01'03" E a distance of 90.92 feet to a found 1/2" rebar; thence S 89°58'57" E a distance of 397.79 feet back to The Point of Beginning of the above described parcel of land containing 7.637 acres or 332687.07 sqft., more or less.

WITNESS MY SIGNATURE on this the _____ day of _____,2024
Registration Number 33410

_____
Jeff M. Lewis

CERTIFICATE OF COMPLIANCE WITH SUBDIVISION REGULATIONS
STATE OF MISSISSIPPI
COUNTY OF MADISON

I hereby certify that the monuments and markers shown hereon are in place on the ground and the plan and plat shown and described hereon area true and correct representation of a survey to the accuracy designated in the Subdivision Regulations for the City of Ridgeland, Madison County, Mississippi.

WITNESS MY SIGNATURE on the _____ day of _____,2024

_____
Jeff M. Lewis, PLS 33410

FILING AND RECORDATION
STATE OF MISSISSIPPI
COUNTY OF MADISON

I, Ronny Lott, Clerk of the Chancery Court in and for said County and State, do hereby certify that this duplicate plat of MAISON BLEU SUBDIVISION, PHASE II was filed for recording my office on this the _____ day of _____, 2024, and was duly recorded in Cabinet _____ at Slide _____ of the records of maps and plats of land of Madison County, Mississippi.

Given under my hand and seal of office this _____ day of _____, 2024.

_____
Ronny Lott, CHANCERY CLERK

_____
DEPUTY CLERK

CERTIFICATE OF COMPARISON
STATE OF MISSISSIPPI
COUNTY OF MADISON

We, Ronny Lott, Clerk and Jeff M. Lewis, Professional Land Surveyor, do hereby certify that we have carefully compared this plat of MAISON BLEU SUBDIVISION, PHASE II with the original thereof, and find it to be a true and correct copy of said plat.

Given under my hand and seal of office this _____ day of _____, 2024

_____
Ronny Lott, CHANCERY CLERK

_____
Jeff M. Lewis, PS–33410

CITY PLANNING AND ENGINEER'S APPROVAL
STATE OF MISSISSIPPI
CITY OF RIDGELAND
COUNTY OF MADISON

We have examined this plat and find that it conforms to all conditions set forth on the preliminary plat as approved by the Mayor and Board of Aldermen and thus recommend final approval.

_____
Public Works Director

_____
City Planning and Zoning Board Chairman

CITY APPROVAL CERTIFICATE
STATE OF MISSISSIPPI
CITY OF RIDGELAND
COUNTY OF MADISON

I hereby certify that this is a true copy and that this plat was approved by the Mayor and Board of Aldermen in session on the _____ day of _____, 2024

ATTEST:

_____
MAYOR CITY OF RIDGELAND

_____
CITY CLERK

PRELIMINARY PLAT
DATE: 08/30/2024

SURVEYED AND PLATTED BY
R.E.D.
LAND SURVEYING, LLC
304 RIVERTON COURT
BYRAM, MISSISSIPPI 39272
PHONE: 601-955-1747
email: jeff682@bellsouth.net
PROJECT NO.: 12009 - STY

STORM WATER POLLUTION PREVENTION PLAN

FOR

Maison Bleu Subdivision
Phase II

Prepared for

Mississippi Department of Environmental Quality

Prepared by

ALFORD AND ASSOCIATES
CONSULTING ENGINEERS

May 2024

Scanned with CamScanner

Table of Contents

SECTIONS	TITLE
Section 1.0	SITE INFORMATION
Section 2.0	VEGETATIVE CONTROLS
Section 3.0	STRUCTURAL CONTROLS
Section 4.0	OTHER CONTROLS
Section 5.0	POST CONSTRUCTION CONTROLS
Section 6.0	INSPECTIONS
Section 7.0	MAINTENANCE PLAN
Section 8.0	IMPLEMENTATION SEQUENCE

ATTACHMENTS

ATTACHMENT 1	CONSTRUCTION NOTICE OF INTENT
ATTACHMENT 2	PRIME CONTRACTOR CERTIFICATION
ATTACHMENT 3	SITE LOCATION MAP
ATTACHMENT 4	EROSION CONTROL PLANS

Scanned with CamScanner

1.0 SITE INFORMATION

This Storm Water Pollution Prevention Plan (SWPPP) has been prepared to obtain a *State of Mississippi Stormwater Construction General Permit* for use during the construction of a proposed residential subdivision in Ridgeland, Mississippi. The site is located on East Jackson St, near the intersection of E. Jackson St. and Hwy 51. The project will be located in the SE ¼ of Section 19, T7N, R2E Ridgeland, Mississippi. The development will involve general grading and excavation for construction of streets, water, sewer and drainage. The total acreage of the property is 16.6 acres. Approximately 8.0 acres will be disturbed during this construction of Phase II. It is anticipated that construction will begin summer 2024. Completion is estimated December 2025. A copy of this SWPPP shall remain at the permitted Site throughout construction activities.

2.0 VEGETATIVE CONTROLS

Vegetative controls will be implemented to preserve existing trees and other vegetation along property lines where possible. All excavated areas will be seeded with a permanent cover of perennial grasses after completion of construction. Depending on the time of year, if a permanent vegetative cover may not be suited for seeding, then a temporary cover (annual grasses) may be seeded to protect disturbed areas from erosion until a permanent cover can be applied. Some topsoil may be stockpiled for placement after excavation.

3.0 STRUCTURAL CONTROLS

Silt Fences will be constructed according to the enclosed exhibit. The silt fence will collect sediment and reduce storm water runoff. An existing detention basin is currently in place as shown on the attached drawing. Storm water will be transported to this basin by earthen swales and ditches initially, then by storm water piping as development progresses. All proposed inlets will be protected by silt fencing with staked hay bales during construction. The existing U-notch weir overflow structure will allow sediment to settle during construction.

4.0 OTHER CONTROLS

All construction waste materials will be collected and disposed of in proper trash containers. These containers will be placed at convenient locations throughout the site. These containers will be emptied at regular intervals. All equipment maintenance and repair will be performed offsite. Oils, diesel fuel, fertilizers, or any other toxic materials will not be stored onsite. All spills will be cleaned up immediately after discovery and reported to the proper state or local governmental agency.

Scanned with CamScanner

Portable sanitary facilities will be provided for construction workers. All sanitary waste will be collected as required by local regulation.

5.0 POST CONSTRUCTION CONTROLS

Upon the completion of construction, the remaining unpaved areas will be seeded, sodded or landscaped to establish permanent vegetation. The existing detention basin will be cleaned of all deposited sediment after construction. Riprap will be placed at concentrated storm water discharge points to prevent erosion from high runoff velocities.

6.0 INSPECTIONS

Visual site inspections will be performed once a week at the site. Records of these inspections will be maintained. If any problems are noted during the inspections, corrective actions should be implemented immediately. Any spills or other discharges must be recorded.

7.0 MAINTENANCE PLAN

Proper maintenance practices will be to check all disturbed areas after each rainfall. Inspect all erosion and sediment controls after each rainfall event but not less than once per week. Remove sediment from silt fences when accumulated sediment has reached 50 percent capacity. Replace non-functional silt fences. Maintain all vegetated areas to provide proper ground cover reseed, fertilize, and mulch as needed. Make needed repairs within 24 hours.

8.0 IMPLEMENTATION SEQUENCE

- Build construction entrance
- Construct silt fencing
- Strip topsoil for stockpiling
- Proceed with general construction/grading
- Plant permanent vegetation
- Remove temporary stormwater structures

Scanned with CamScanner

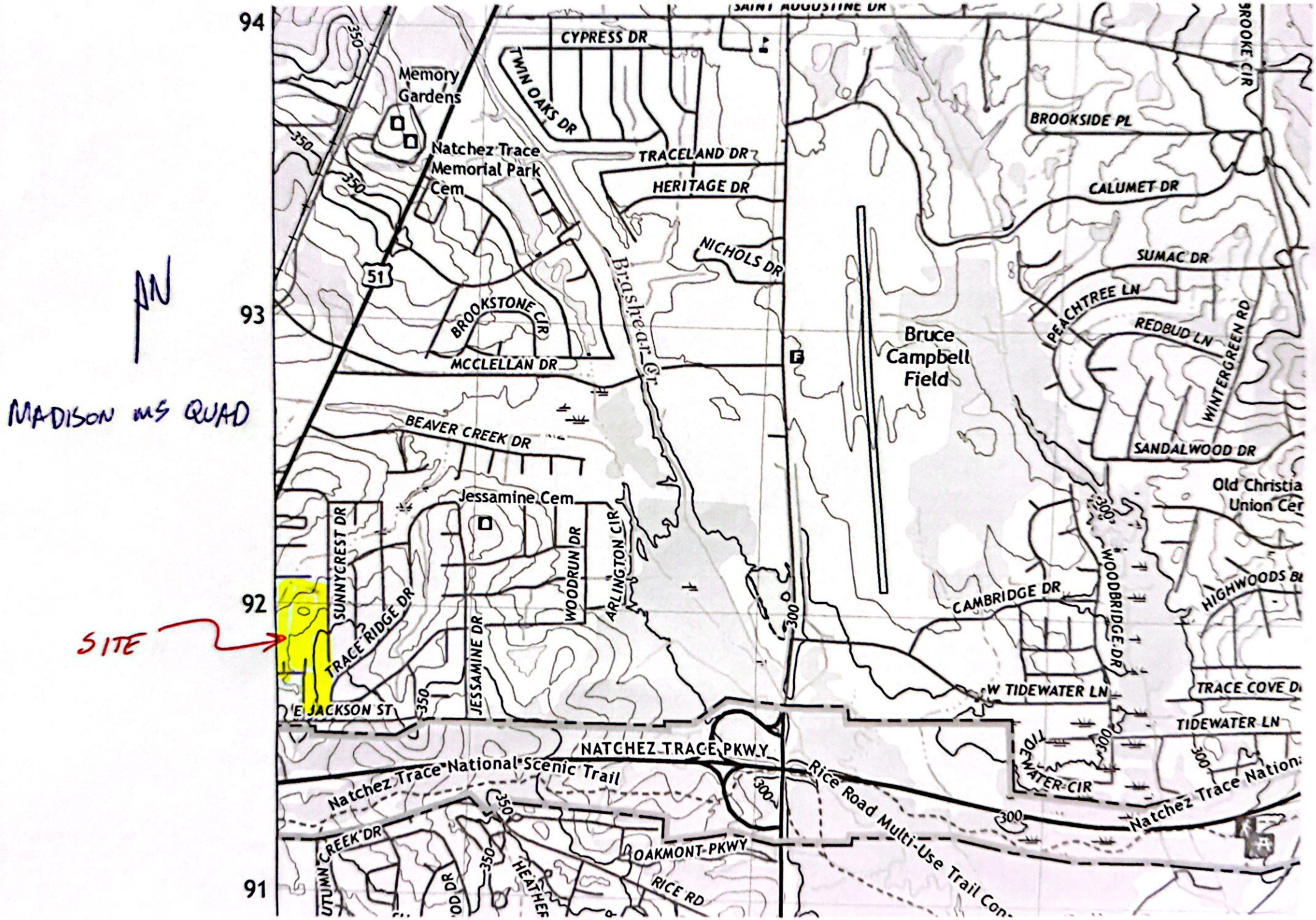

N

MADISON MS QUAD

SITE

Scanned with CamScanner

MISSISSIPPI DEPARTMENT OF
ENVIRONMENTAL QUALITY

LARGE CONSTRUCTION NOTICE OF INTENT (LCNOI) FOR COVERAGE UNDER THE LARGE CONSTRUCTION STORM WATER GENERAL NPDES PERMIT

INSTRUCTIONS

The Large Construction Notice of Intent (LCNOI) is for coverage under the Large Construction General Permit for land disturbing activities of five (5) acres or greater; or for land disturbing activities, which are part of a larger common plan of development or sale that are initially less than five (5) acres but will ultimately disturb five (5) or more acres. Applicant must be the owner or operator. For construction activities, the operator is typically the prime contractor. The owner(s) of the property and the prime contractor associated with regulated construction activity on the property have joint and severable responsibility for compliance with the Large Construction Storm Water General Permit MSR10.

If the company seeking coverage is a corporation, a limited liability company, a partnership, or a business trust, attach proof of its registration with the Mississippi Secretary of State and/or its Certificate of Good Standing. This registration or Certificate of Good Standing must be dated within twelve (12) months of the date of the submittal of this coverage form. Coverage will be issued in the company name as it is registered with the Mississippi Secretary of State.

Completed LCNOIs should be filed at least thirty (30) days prior to the commencement of construction. Discharge of storm water from large construction activities without written notification of coverage is a violation of state law.

Submittals with this LCNOI must include:
- **A site-specific Storm Water Pollution Prevention Plan (SWPPP) developed in accordance with ACT5 of the General Permit**
- **A detailed site-specific scaled drawing showing the property layout and the features outlined in ACT5 of the General Permit**
- **A United States Geological Survey (USGS) quadrangle map or photocopy, extending at least one-half mile beyond the facility property boundaries with the site location and outfalls outlined or highlighted. The name of the quadrangle map must be shown on all copies. Quadrangle maps can be obtained from the MDEQ, Office of Geology at 601-961-5523.**

Additional submittals may include the following, if applicable:
- **Appropriate Section 404 documentation from U.S. Army Corps of Engineers**
- **Appropriate documentation concerning future disposal of sanitary sewage and sewage collection system construction**
- **Appropriate documentation from the MDEQ Office of Land & Water concerning dam construction and low flow requirements**
- **Approval from County Utility Authority in Hancock, Harrison, Jackson, Pearl River and Stone Counties**
- **Antidegradation report for disturbance within Waters of the State**

ALL QUESTIONS MUST BE ANSWERED (Answer "NA" if the question is not applicable)

Scanned with CamScanner

MSR10 _ _ _ _

(NUMBER TO BE ASSIGNED BY STATE)

APPLICANT IS THE: [X] OWNER [ ] PRIME CONTRACTOR

OWNER CONTACT INFORMATION

OWNER CONTACT PERSON: Nick Gullette

OWNER COMPANY LEGAL NAME: MS Developers LLC

OWNER STREET OR P.O. BOX: 105 Spann Dr

OWNER CITY: Brandon STATE: MS ZIP: 39047

OWNER PHONE #: (601) 506 2502 OWNER EMAIL: Nick@MSHomesLLC.com

PREPARER CONTACT INFORMATION

IF NOI WAS PREPARED BY SOMEONE OTHER THAN THE APPLICANT

CONTACT PERSON: Mac Alford

COMPANY LEGAL NAME: Alford & Associates

STREET OR P.O. BOX: 7112 S. Siwell Rd., Suite B

CITY: Byram STATE: MS ZIP: 39272

PHONE # ( ) 601-506-1854 EMAIL: mac.alford@alford-associates.com

PRIME CONTRACTOR CONTACT INFORMATION

PRIME CONTRACTOR CONTACT PERSON: TBD

PRIME CONTRACTOR COMPANY LEGAL NAME:

PRIME CONTRACTOR STREET OR P.O. BOX:

PRIME CONTRACTOR CITY: STATE: ZIP:

PRIME CONTRACTOR PHONE #: ( ) PRIME CONTRACTOR EMAIL:

FACILITY SITE INFORMATION

FACILITY SITE NAME: Maison Bleu Subdivision, Phase II

FACILITY SITE ADDRESS (If the physical address is not available, please indicate the nearest named road. For linear projects indicate the beginning of the project and identify all counties the project traverses.)

STREET: E. Jackson St.

CITY: Ridgeland STATE: MS COUNTY: Madison ZIP: 39157

FACILITY SITE TRIBAL LAND ID (N/A If not applicable):

LATITUDE: 32 degrees 25 minutes 42 seconds LONGITUDE: 90 degrees 07 minutes 26.5 seconds

LAT & LONG DATA SOURCE (GPS *(Please GPS Project Entrance/Start Point)* or Map Interpolation): Map Interp.

TOTAL ACREAGE THAT WILL BE DISTURBED [1]: 8

Scanned with CamScanner

IS THIS PART OF A LARGER COMMON PLAN OF DEVELOPMENT? YES ☐ NO ☑

IF YES, NAME OF LARGER COMMON PLAN OF DEVELOPMENT: _____
AND PERMIT COVERAGE NUMBER: MSR10_ _ _ _

ESTIMATED CONSTRUCTION PROJECT START DATE: 2024-7 (YYYY-MM-DD)

ESTIMATED CONSTRUCTION PROJECT END DATE: 2025-12 (YYYY-MM-DD)

DESCRIPTION OF CONSTRUCTION ACTIVITY: Grading, Excavation, Street Construction, Utilitu Construction

PROPOSED DESCRIPTION OF PROPERTY USE AFTER CONSTRUCTION HAS BEEN COMPLETED:
Residential SF

SIC Code: __ __ __ __ NAICS Code _ _ _ _ _ _

NEAREST NAMED RECEIVING STREAM: Brashear Creek

IS RECEIVING STREAM ON MISSISSIPPI'S 303(d) LIST OF IMPAIRED WATER BODIES? (The 303(d) list of impaired waters and TMDL stream segments may be found on MDEQ's web site: http://www.deq.state.ms.us/MDEQ.nsf/page/TWB_Total_Maximum_Daily_Load_Section) YES ☐ NO ☑

HAS A TMDL BEEN ESTABLISHED FOR THE RECEIVING STREAM SEGMENT? YES ☐ NO ☑

FOR WHICH POLLUTANT:

ARE THERE RECREATIONAL STREAMS, PRIVATE/PUBLIC PONDS OR LAKES WITHIN ½ MILE DOWNSTREAM OF PROJECT BOUNDRY THAT MAY BE IMPACTED BY THE CONSTRUCTION ACTIVITY? YES ☐ NO ☑

EXISTING DATA DESCRIBING THE SOIL (for linear projects please describe in SWPPP):
silt loam, silt clay loam

WILL FLOCCULANTS BE USED TO TREAT TURBIDITY IN STORM WATER? YES ☐ NO ☑

IF YES, INDICATE THE TYPE OF FLOCCULANT. ☐ ANIONIC POLYACRYLIMIDE (PAM)
☐ OTHER _____

IF YES, DOES THE SWPPP DESCRIBE THE METHOD OF INTRODUCTION, THE LOCATION OF INTRODUCTION AND THE LOCATION OF WHERE FLOCCULATED MATERIAL WILL SETTLE?

IS A SDS SHEET INCLUDED FOR THE FLOCCULATE? YES ☐ NO ☐

WILL THERE BE A 50 FT BUFFER BETWEEN THE PROJECT DISTURBANCE AND THE WATERS OF THE STATE? YES ☑ NO ☐

IF NOT, PROVIDE EQUIVALENT CONTROL MEASURES IN THE SWPPP.

[1]Acreage for subdivision development includes areas disturbed by construction of roads, utilities and drainage. Additionally, a housesite of at least 10,000 ft^2 per lot (entire lot, if smaller) shall be included in calculating acreage disturbed.

Scanned with CamScanner

DOCUMENTATION OF COMPLIANCE WITH OTHER REGULATIONS/REQUIREMENTS

COVERAGE UNDER THIS PERMIT WILL NOT BE GRANTED UNTIL ALL OTHER REQUIRED MDEQ PERMITS AND APPROVALS ARE SATISFACTORILY ADDRESSED

IS LCNOI FOR A FACILITY THAT WILL REQUIRE OTHER PERMITS? YES ☐ NO ☑

IF YES, CHECK ALL THAT APPLY: ☐ AIR ☐ HAZARDOUS WASTE ☐ PRETREATMENT

☐ WATER STATE OPERATING ☐ INDIVIDUAL NPDES ☐ OTHER: _____

IS THE PROJECT REROUTING, FILLING OR CROSSING A WATER CONVEYANCE OF ANY KIND? (If yes, contact the U.S. Army Corps of Engineers' Regulatory Branch for permitting requirements.) YES ☐ NO ☑

IF THE PROJECT REQUIRES A CORPS OF ENGINEER SECTION 404 PERMIT, PROVIDE APPROPRIATE DOCUMENTATION THAT:

-The project has been approved by individual permit, or
-The work will be covered by a nationwide permit and NO NOTIFICATION to the Corps is required, or
-The work will be covered by a nationwide or general permit and NOTIFICATION to the Corps is required

IS THE PROJECT REROUTING, FILLING OR CROSSING A STATE WATER CONVEYANCE OF ANY KIND? (If yes, please provide an antidegradation report.) YES ☐ NO ☑

IS A LAKE REQUIRING THE CONSTRUCTION OF A DAM BEING PROPOSED? (If yes, provide appropriate approval documentation from MDEQ Office of Land and Water, Dam Safety.) YES ☐ NO ☑

IF THE PROJECT IS A SUBDIVISION OR A COMMERCIAL DEVELOPMENT, HOW WILL SANITARY SEWAGE BE DISPOSED? Check one of the following and attach the pertinent documents.

☑ **Existing Municipal or Commercial System. Please attach plans and specifications for the collection system and the associated "Information Regarding Proposed Wastewater Projects" form or approval from County Utility Authority in Hancock, Harrison, Jackson, Pearl River and Stone Counties. If the plans and specifications can not be provided at the time of LCNOI submittal, MDEQ will accept written acknowledgement from official(s) responsible for wastewater collection and treatment that the flows generated from the proposed project can and will be transported and treated properly. The letter must include the estimated flow.**

☐ **Collection and Treatment System will be Constructed. Please attach a copy of the cover of the NPDES discharge permit from MDEQ or indicate the date the application was submitted to MDEQ (Date: _____.)**

☐ **Individual Onsite Wastewater Disposal Systems for Subdivisions Less than 35 Lots. Please attach a copy of the Letter of General Acceptance from the Mississippi State Department of Health or certification from a registered professional engineer that the platted lots should support individual onsite wastewater disposal systems.**

☐ **Individual Onsite Wastewater Disposal Systems for Subdivisions Greater than 35 Lots. A determination of the feasibility of installing a central sewage collection and treatment system must be made by MDEQ. A copy of the response from MDEQ concerning the feasibility study must be attached. If a central collection and wastewater system is not feasible, then please attach a copy of the Letter of General Acceptance from the State Department of Health or certification from a registered professional engineer that the platted lots should support individual onsite wastewater disposal systems.**

INDICATE ANY LOCAL STORM WATER ORDINANCE (I.E. MS4)WITH WHICH THE PROJECT MUST COMPLY:

_____

_____

Scanned with CamScanner

I certify under penalty of law that this document and all attachments were prepared under my direction or supervision in accordance with a system designed to assure that qualified personnel properly gathered and evaluated the information submitted. Based on my inquiry of the person or persons who manage the system, or those persons directly responsible for gathering the information, the information submitted is, to the best of my knowledge and belief, true, accurate and complete. I am aware that there are significant penalties for submitting false information, including the possibility of fine and imprisonment for knowing violations.

Signature of Applicant[1] (owner or prime contractor) — **Date Signed** 5-6-24

Nick Gilliett — **Printed Name[1]** — **Title** owner

[1]This application shall be signed as follows:

- **For a corporation, by a responsible corporate officer.**
- **For a partnership, by a general partner.**
- **For a sole proprietorship, by the proprietor.**

For a municipal, state or other public facility, by principal executive officer, mayor, or ranking elected official

Please submit the LCNOI form to: **Chief, Environmental Permits Division**
MS Department of Environmental Quality, Office of Pollution Control
P.O. Box 2261
Jackson, Mississippi 39225

Electronically: **https://www.mdeq.ms.gov/construction-stormwater/**

Revised 3/23/22

Scanned with CamScanner

MAISON BLEU SUBDIVISION
PHASE II - 49 LOTS

RIDGELAND, MISSISSIPPI

WATER, SEWER AND STREET CONSTRUCTION

OWNER: D.R. HORTON

DRAWING INDEX	
DRAWING NO.	DESCRIPTION
1	COVER SHEET
2	NOTES
3	STREET GEOMETRIC LAYOUT
4	PLAN/PROFILE
5	PLAN/PROFILE
6	GRADING/EROSION CONTROL PLAN
7	GRADING/EROSION CONTROL PLAN
8	GRADING/EROSION CONTROL PLAN
9	WATER DETAILS
10	WATER DETAILS
11	WATER DETAILS
12	SEWER DETAILS
13	MISCELLANEOUS DETAILS

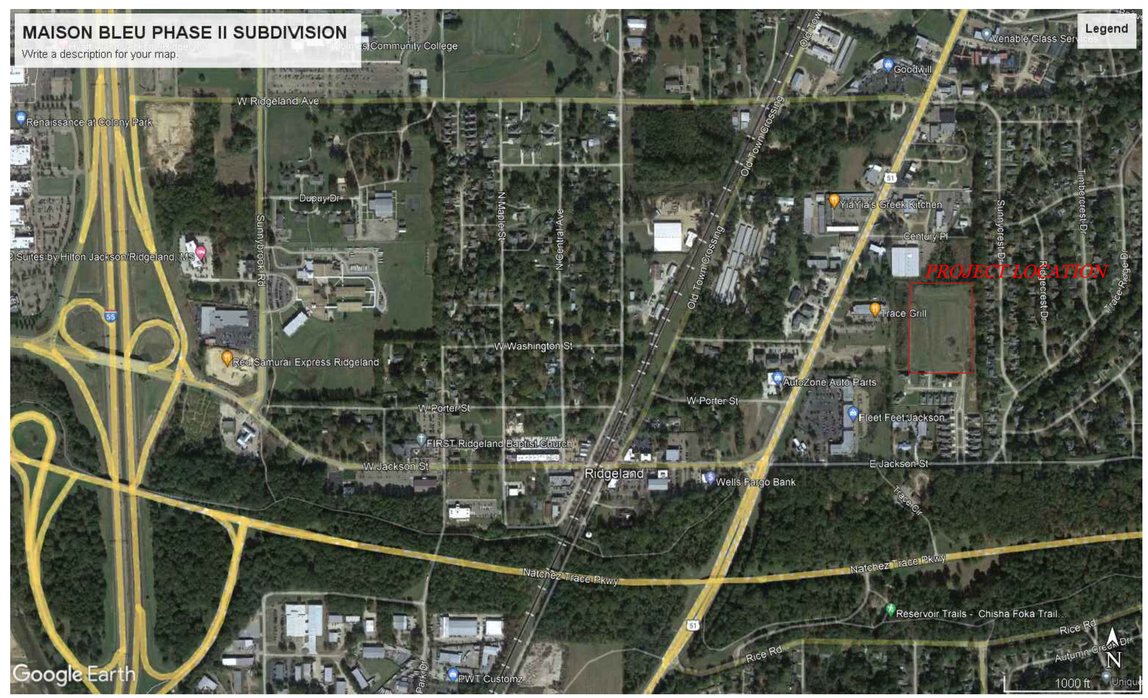

LOCATION MAP

NOT TO SCALE

JANUARY 2024

Alford and Associates
Consulting Engineers
7112 Suite B Siwell Road
Byram, Mississippi 39272

GENERAL NOTES

1. ALL EXCAVATION, OVER EXCAVATION, BACKFILL AND COMPACTION OF FILL MATERIAL SHALL FOLLOW RECOMMENDATIONS OF GEOTECHNICAL REPORT, PROVIDED BY OTHERS. SEE GEOTECH REPORT FOR PAVING RECOMMENDATIONS.
2. CONTRACTOR SHALL NOTIFY MISSISSIPPI 811 BEFORE ANY EXCAVATION TO HAVE UNDERGROUND UTILITIES LOCATED.
3. PROPERTY ZONED R4, ZERO LOT LINE RESIDENTIAL DISTRICT. DIMENSIONAL VARIANCE (SECTION 600.08 PER CITY OF RIDGELAND ZONING ORDINANCE) OBTAINED FOR REDUCED SETBACKS.
4. TOTAL PROJECT AREA = 7.637 AC.
5. ALL EXPOSED NON PARKING/DRIVE AREAS SHALL BE SEEDED AND MULCHED AFTER CONSTRUCTION.
6. THE CONTRACTOR SHALL VERIFY ALL EXISTING AND PROPOSED PLAN DIMENSIONS IN THE FIELD, AND SHALL SATISFY HIMSELF AS TO THE ACCURACY OF SAID DIMENSIONS. ANY DISCREPANCIES SHALL BE BROUGHT TO THE ATTENTION OF THE ENGINEER BEFORE CONSTRUCTION BEGINS.
7. CONTRACTOR SHALL PRESERVE ALL SURVEY STAKES/MARKERS/MONUMENTS DURING CONSTRUCTION.
8. ALL EXISTING MATERIAL AND DEBRIS SHALL BE REMOVED FROM THE SITE.
9. UNSUITABLE EXCAVATED MATERIAL ACCUMULATED DURING CONSTRUCTION SHALL BE REMOVED FROM THE SITE.
10. ALL TESTING SHALL BE PERFORMED BY AN APPROVED TESTING LABORATORY OR FIELD TESTING COMPANY.
11. ALL EXCAVATED AREAS SHALL BE BACKFILLED AT END OF WORK EACH DAY.
12. ANY FENCES, SIDEWALKS, CURBING, ETC. DAMAGED DURING CONSTRUCTION SHALL BE REPLACED TO ORIGINAL CONDITION.
13. CONTRACTOR SHALL ENSURE EXISTING STREETS ARE KEPT CLEAN AND FREE OF DEBRIS DURING NON–WORK HOURS.
14. STATIONING SHOWN IS ON A LEVEL PLANE. ACTUAL STREET AND UTILITY DISTANCES SHALL BE MEASURED ALONG RESPECTIVE SLOPE OR CURVE.
15. ELEVATIONS SHOWN ARE BASED ON M.S.L. DATUM (NAVD88).
16. WORKMANSHIP OR MATERIALS THAT DO NOT MEET SPECIFICATION SHALL BE REJECTED AND REPLACED.
17. PROPOSED RADII DIMENSIONS SHOWN ARE TO FACE OF CURB.
18. CONTRACTOR FOR EACH INDIVIDUAL LOT RESPONSIBLE FOR PROVIDING POSITIVE DRAINAGE BETWEEN LOTS TO STREET, OR REAR OF LOT WHERE DRAINAGE IS ALLOWED TO FLOW.
19. CONTRACTOR SHALL PROVIDE DENSITY TESTING OF SUBGRADE IN ACCORDANCE WITH CITY STANDARDS.
20. CONTRACTOR SHALL COORDINATE WITH THE CITY OF RIDGELAND FOR INSPECTION OF UNDERGROUND UTILITIES PRIOR TO THEM BEING COVERED.
21. PRECONSTRUCTION MEETING SHALL BE SCHEDULED WITH CONTRACTOR AND THE CITY OF RIDGELAND PRIOR TO ISSUANCE OF PERMIT.
22. CONTRACTOR OR DEVELOPER SHALL BE RESPONSIBLE FOR PROVIDING 2–2" CALIPER TREES PER LOT. ONE (1) OF THE REQUIRED TREES SHALL BE PLANTED IN FRONT YARD SETBACK. REQUIRED TREES SHALL BE CANOPY TREE SPECIES (OAK, ELMS, ETC.)

WATER & SEWER

1. ALL EXISTING UTILITY MAINS AND SERVICES SHOWN ARE APPROXIMATE, AND MUST BE FIELD VERIFIED. WATER AND SEWER SERVICE PROVIDED BY CITY OF RIDGELAND.
2. CONTRACTOR SHALL MAKE ALL CONNECTIONS TO EXISTING UTILITIES AND COORDINATE WITH THE CITY OF RIDGELAND PUBLIC WORKS DEPT. NO CONNECTION SHALL BE MADE WITHOUT COORDINATION WITH THE CITY OF RIDGELAND PUBLIC WORKS DEPARTMENT.
3. ALL PROPOSED MANHOLES, FIRE HYDRANTS, VALVE BOXES, ETC, SHALL BE ADJUSTED TO PROPER GRADE AND LOCATION AFTER FINISHED PAVING IS APPLIED.
4. EACH WATER AND SEWER SERVICE SHALL BE CAPPED WATERPROOF AND MARKED.
5. ALL WATER AND SEWER LINES SHALL HAVE A MINIMUM OF 3' COVER FROM TOP OF PIPE TO FINISHED GRADE.
6. WATER LINES SHALL MAINTAIN A MINIMUM CLEARANCE, ABOVE OR BELOW, FROM STORM SEWER LINES OR STRUCTURES.
7. 10' HORIZONTAL CLEARANCE IS REQUIRED BETWEEN WATER AND SEWER LINES. AT WATER AND SEWER CROSSINGS, 18" MINIMUM CLEARANCE SHALL BE PROVIDED, WITH WATER LINE CROSSING ABOVE SEWER LINE.
8. ALL SANITARY SEWER SERVICE LOCATIONS SHALL BE MARKED WITH A "Y" CUT INTO THE FACE OF THE CURB.
9. WATER SERVICE LOCATIONS SHALL BE INSTALLED 10' TO THE UPHILL SIDE OF SEWER SERVICE UNLESS OTHERWISE SHOWN. WATER SERVICE LOCATIONS SHALL BE MARKED WITH A "W" CUT INTO THE FACE OF CUEB. WATER AND SEWER SERVICES SHALL BE LOCATED WITHIN 5' OF THE NORTH OR SOUTH PROPERTY LINES.
10. FIRE HYDRANT MAKE AND MODEL SHALL BE APPROVED BY THE CITY OF RIDGELAND.
11. CONTRACTOR SHALL BE RESPONSIBLE FOR ALL WATER AND SEWER TESTING, PER MSDH, MDEQ AND CITY OF RIDGELAND REQUIREMENTS.
12. WATER FITTINGS SHALL BE RESTRAINED JOINT WITH MEGA LUGS AND CONCRETE THRUST BLOCKS.
13. LENGTH OF SEWER LINES IS MEASURED FROM CENTER MANHOLE TO CENTER MANHOLE.
14. CONTRACTOR SHALL PROTECT ALL EXISTING UTILITIES. ANY DAMAGED UTILITIES SHALL BE REPAIRED OR REPLACED TO THE SATISFACTION OF THE CITY OF RIDGELAND
15. WATER MAIN SHALL BE C–900 PVC. SEWER SHALL BE SDR 26 PVC.
16. CONTRACTOR SHALL BE REQUIRED TO PASS PRESSURE TEST IN ACCORDANCE WITH CITY STANDARDS. CONTRACTOR SHALL BE REQUIRED TO DISINFECT NEW WATER LINES AND COORDINATE WITH CITY OF RIDGELAND FOR HEALTH DEPT. TESTING. CONTRACTOR SHALL BE REQUIRED TO PASS SEWER EXFILTRATION AND INFILTRATION TEST AND OTHER TESTING AS REQUIRED BY THE CITY.

GRADING & EROSION CONTROL

1. CONTRACTOR SHALL INSTALL WIRE–BACKED SILT FENCING AROUND DOWNHILL PERIMETER OF SITE AS SHOWN.
2. A STORM WATER POLLUTION PREVENTION PLAN (SWPPP) SHALL BE DEVELOPED AFTER A SITE CONTRACTOR IS DETERMINED FOR THE PROJECT. CONTRACTOR SHALL OBTAIN A COPY, FAMILIARIZE HIMSELF WITH, IMPLEMENT ALL BMP'S AND KEEP A COPY ON SITE FOR REVIEW BY MDEQ. CONTRACTOR SHALL ALSO BE RESPONSIBLE FOR INSPECTING AND REPAIRING ALL BMP'S AS REQUIRED. IN ADDITION, CONTRACTOR SHALL COMPLETE SWPPP INSPECTION REPORTS AS REQUIRED AND KEEP ON SITE WITH SWPPP. EROSION CONTROL ITEMS SHOWN ARE MINIMUM REQUIREMENTS. CONTRACTOR IS RESPONSIBLE TO INSTALL ADDITIONAL MEASURES AS REQUIRED TO MEET MDEQ REQUIREMENTS.
3. ALL DISTURBED AREAS NOT PAVED SHALL BE SEEDED, FERTILIZED, MULCHED AND WATERED AS SOON AS REQUIRED TO PREVENT EROSION. IT IS THE CONTRACTOR'S RESPONSIBILITY TO STABILIZE THE PROJECT WITH 90% VEGETATIVE COVER. CONTRACTOR SHALL RE–SEED, FERTILIZE, WATER, AS MANY TIMES AS NEEDED TO STABILIZE.
4. TECHNICAL SPECIFICATIONS FOR MATERIALS AND CONSTRUCTION OF THIS PROJECT SHALL CONFORM TO THE LATEST EDITION OF MISSISSIPPI STANDARD SPECIFICATIONS FOR ROAD AND BRIDGE CONSTRUCTION.

STORM SEWER

1. TECHNICAL SPECIFICATIONS FOR MATERIALS AND CONSTRUCTION OF THIS PROJECT SHALL CONFORM TO THE LATEST EDITION OF MISSISSIPPI STANDARD SPECIFICATIONS FOR ROAD AND BRIDGE CONSTRUCTION.
2. STORM SEWER INVERT ELEVATIONS SHOWN REPRESENT THE FLOWLINE.
3. ALL REINFORCED CONCRETE PIPE SHALL BE CLASS III AND WRAPPED IN FILTER CLOTH AT ALL JOINTS. LIFT HOLES SHALL BE GROUTED AND SEALED. JOINTS SHALL BE SEALED WITH "RAM–NECK" OR APPROVED EQUAL.
4. CONTRACTOR SHALL PROVIDE DRAIN HOLES OR BLOCK OUTS AT ALL CURB INLETS, TO BE GROUTED IN WHEN FINAL ASPHALT COAT APPLIED.
5. CURB INLET TOPS SHALL MATCH THE LONGITUDINAL SLOPE OF THE CURB WHEN COMPLETE. CURB INLETS SHALL NOT BE SECURED UNTIL CURB INSTALLED.

REV.	DESCRIPTION OF REVISION	BY	REVISION DATE
2	REVISIONS	MJA	9/3/24
1	REVISIONS	MJA	8/9/24
0	ISSUED FOR REVIEW	MJA	1/31/24

Alford and Associates
Consulting Engineers
7112 Suite B Siwell Road
Byram, Mississippi 39272

NOTES

MAISON BLEU SUBDIVISION PHASE II
RIDGELAND, MISSISSIPPI

PROJECT No.

CAD FILE NAME

DRAWING
2 of 13

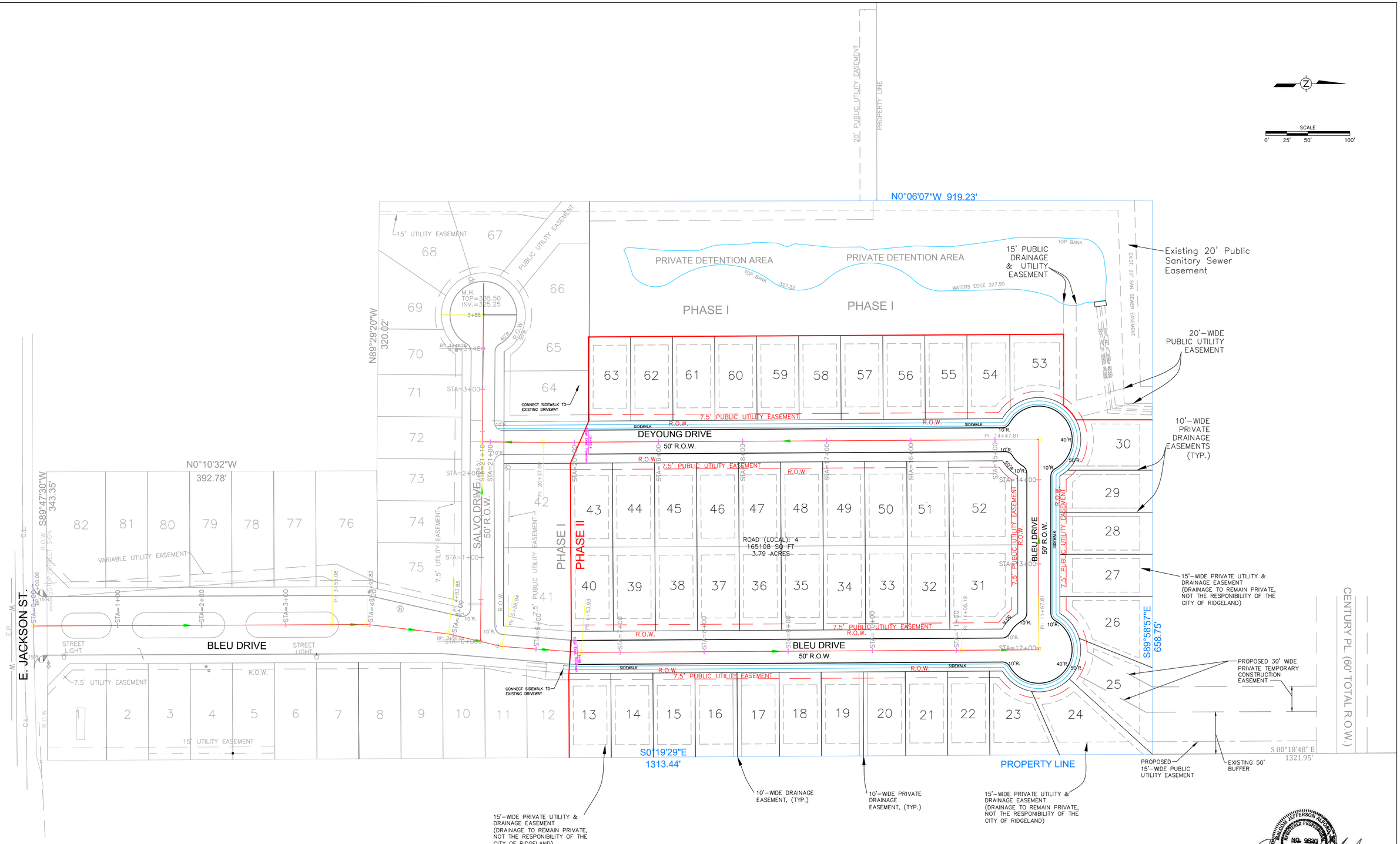

REV.	DESCRIPTION OF REVISION	BY	REVISION DATE
2	REVISIONS	MJA	9/3/24
1	REVISIONS	MJA	8/9/24
0	ISSUED FOR REVIEW	MJA	1/31/24

Alford and Associates
Consulting Engineers
7112 Suite B Siwell Road
Byram, Mississippi 39272

STREET GEOMETRIC LAYOUT

MAISON BLEU SUBDIVISION PHASE II
RIDGELAND, MISSISSIPPI

PROJECT No.

CAD FILE NAME

DRAWING

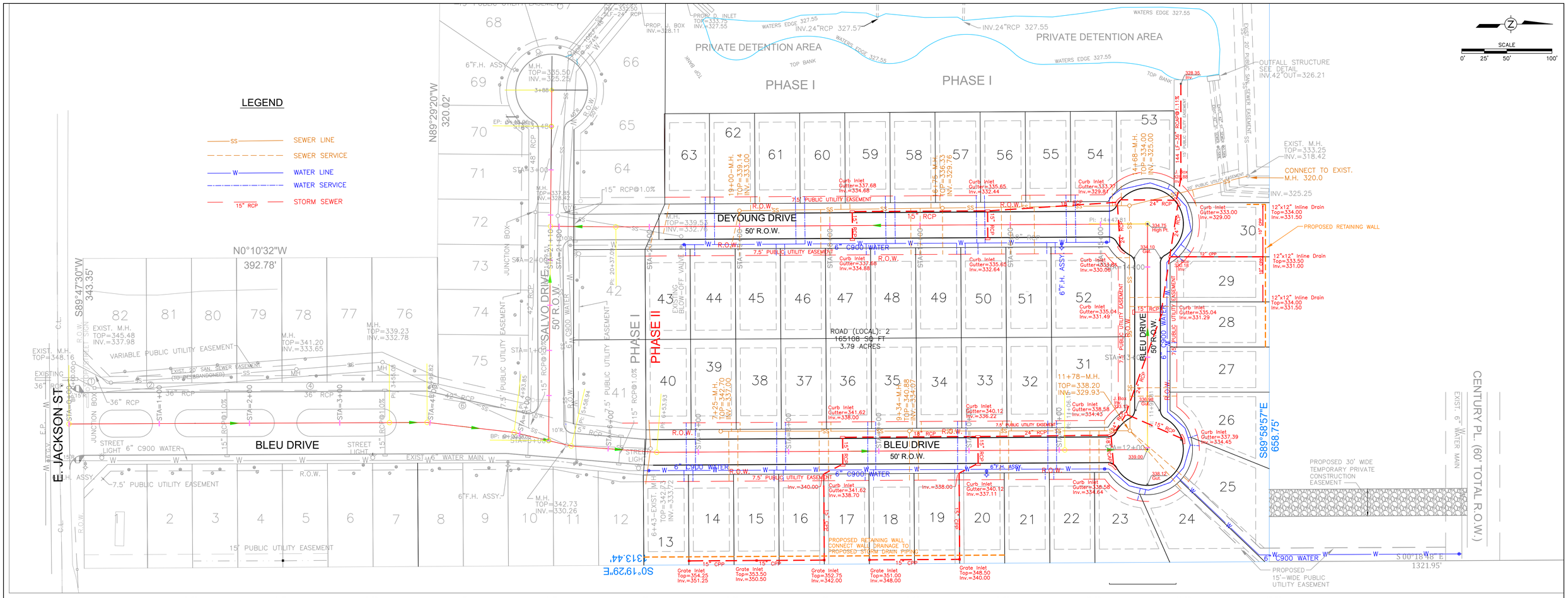

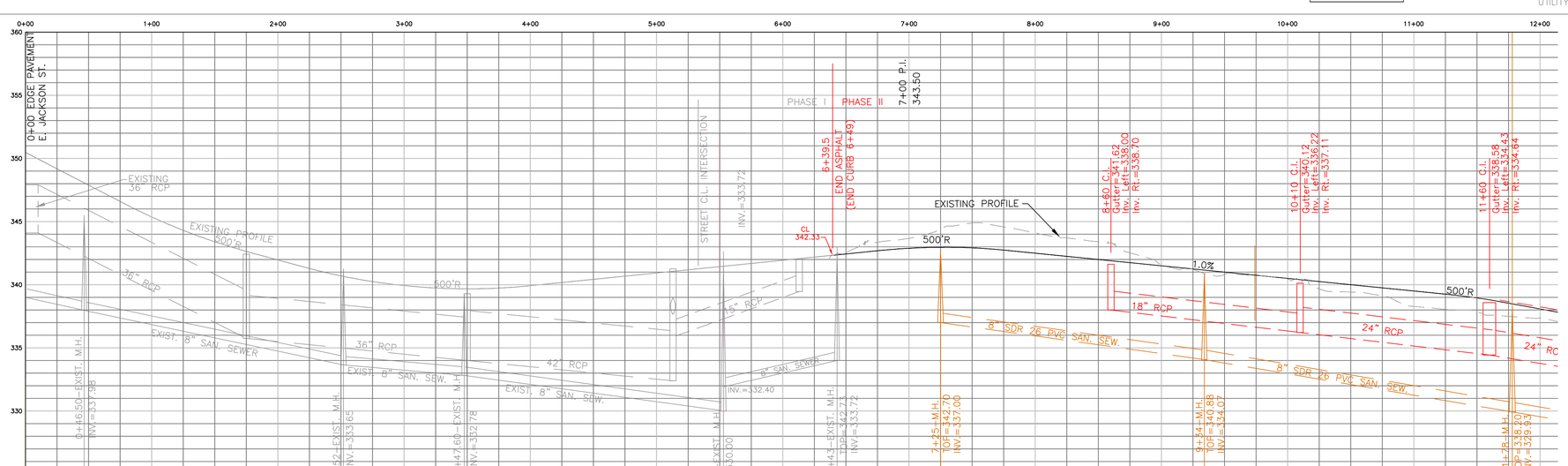

REV.	DESCRIPTION OF REVISION	BY	REVISION DATE
3	CITY COMMENTS REVISIONS	MJA	9/3/24
2	CITY COMMENTS REVISIONS	MJA	8/9/24
1	CITY COMMENTS REVISIONS	MJA	4/19/24
0	ISSUED FOR REVIEW	MJA	1/31/24

Alford and Associates
Consulting Engineers
7112 Suite B Siwell Road
Byram, Mississippi 39272

PLAN/PROFILE

MAISON BLEU SUBDIVISION PHASE II
RIDGELAND, MISSISSIPPI

PROJECT No.

CAD FILE NAME

DRAWING

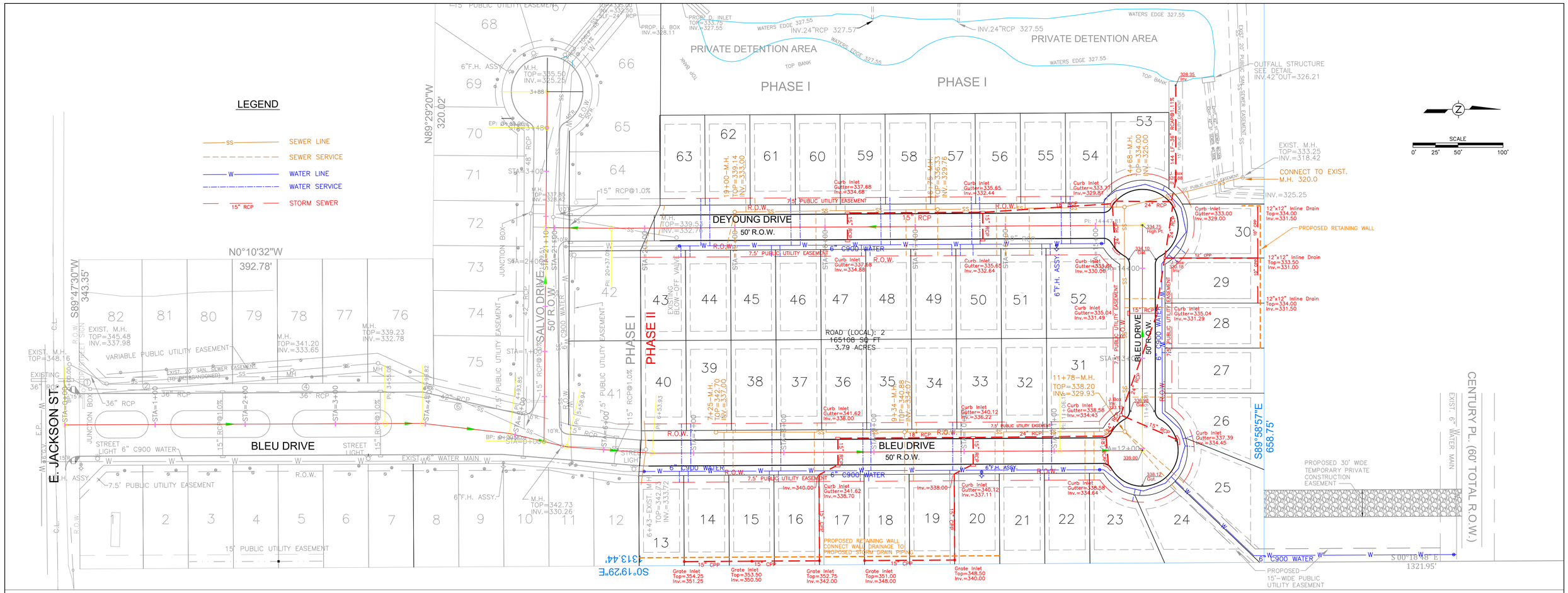

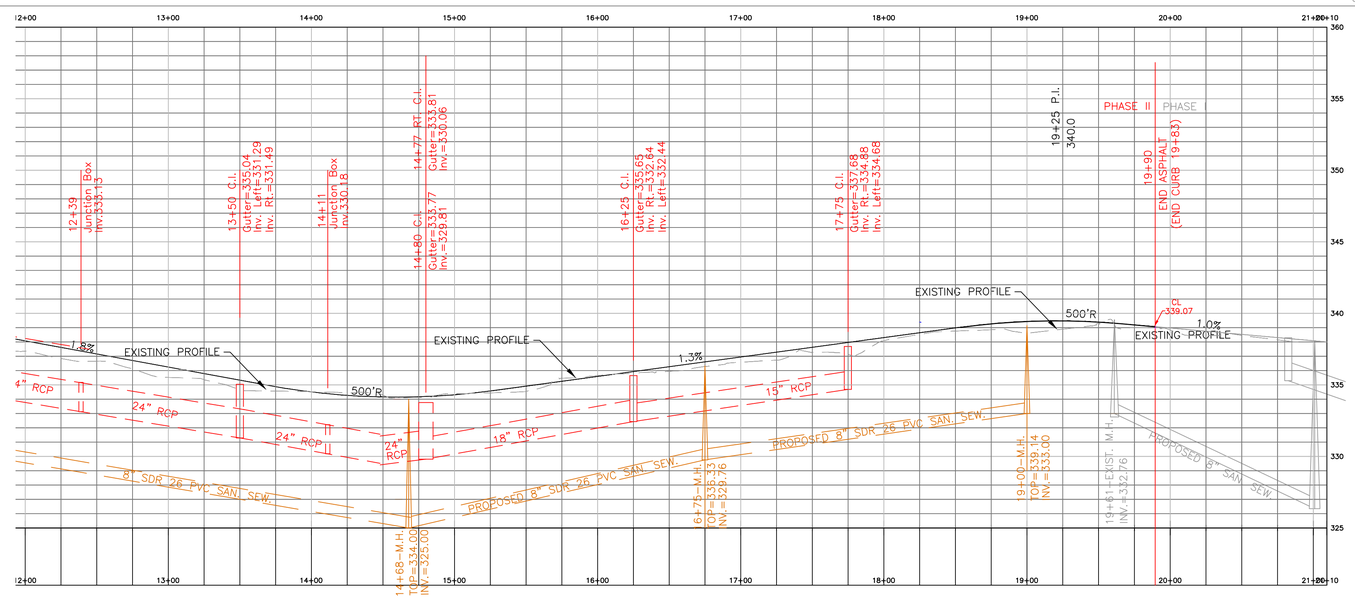

REV.	DESCRIPTION OF REVISION	BY	REVISION DATE
3	CITY COMMENTS REVISIONS	MJA	9/3/24
2	CITY COMMENTS REVISIONS	MJA	8/9/24
1	CITY COMMENTS REVISIONS	MJA	4/19/24
0	ISSUED FOR REVIEW	MJA	12/5/12

Alford and Associates
Consulting Engineers
7112 Suite B Siwell Road
Byram, Mississippi 39272

PLAN/PROFILE

MAISON BLEU SUBDIVISION PHASE II
RIDGELAND, MISSISSIPPI

PROJECT No.

CAD FILE NAME

DRAWING

LEGEND

- 341 — EXISTING CONTOUR
- 341 — PROPOSED CONTOUR
- SF — SF — SILT FENCE
- FINISHED GRADE DRAINAGE DIRECTION
- HAY WATTLE INLET PROTECTION
- CONSTR. ENTRANCE

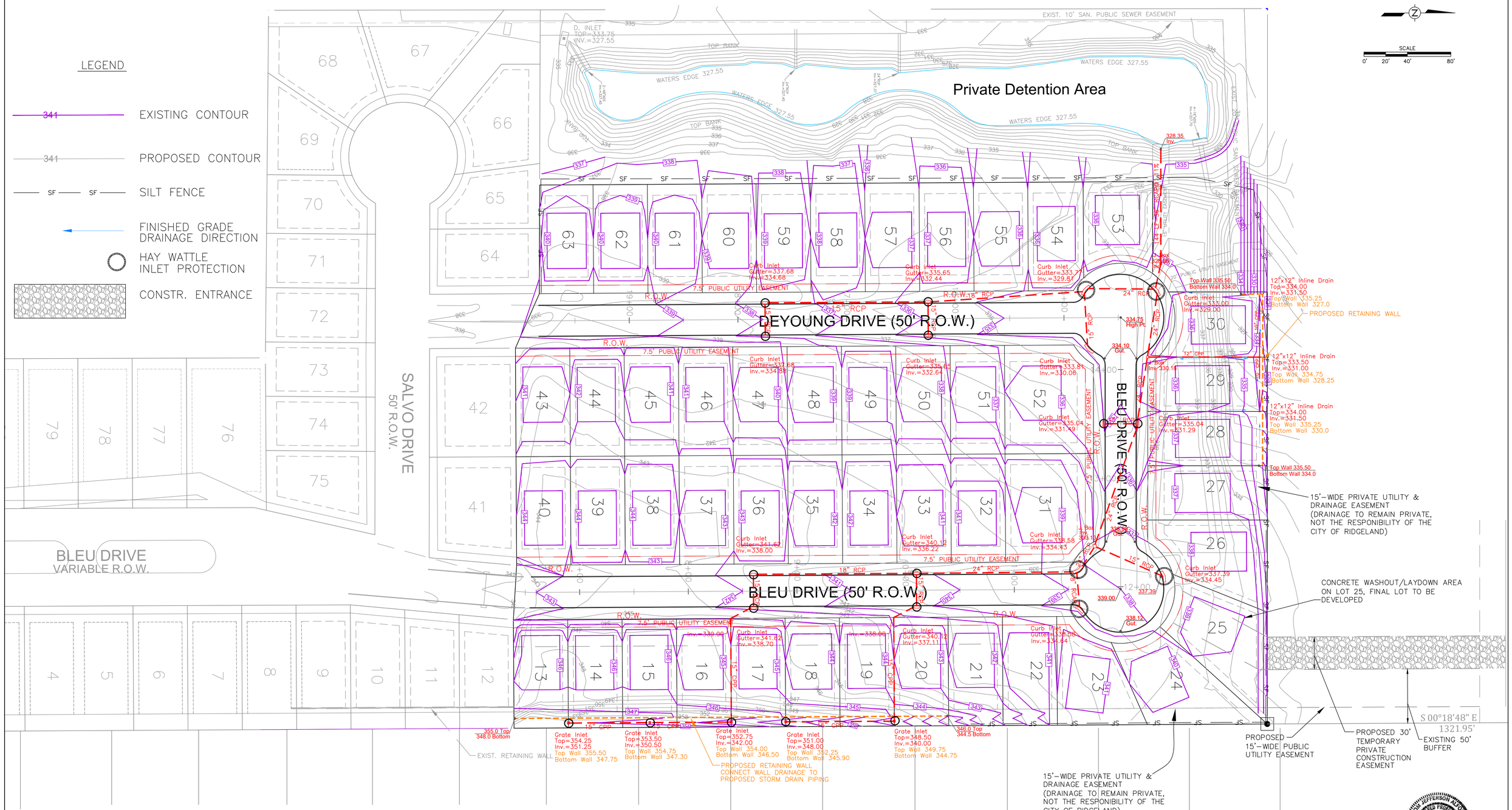

NOTES

REV.	DESCRIPTION OF REVISION	BY	REVISION DATE
4	CITY COMMENT REVISIONS	MJA	9/3/24
3	CITY COMMENT REVISIONS	MJA	8/9/24
2	SWPPP REVISIONS	MJA	7/11/24
1	CITY COMMENTS REVISIONS	MJA	4/19/24
0	ISSUED FOR REVIEW	MJA	1/31/24

Alford and Associates
Consulting Engineers
7112 Suite B Siwell Road
Byram, Mississippi 39272

GRADING/EROSION CONTROL PLAN

MAISON BLEU SUBDIVISION PHASE II
RIDGELAND, MISSISSIPPI

PROJECT No.

CAD FILE NAME

DRAWING 6 of 13

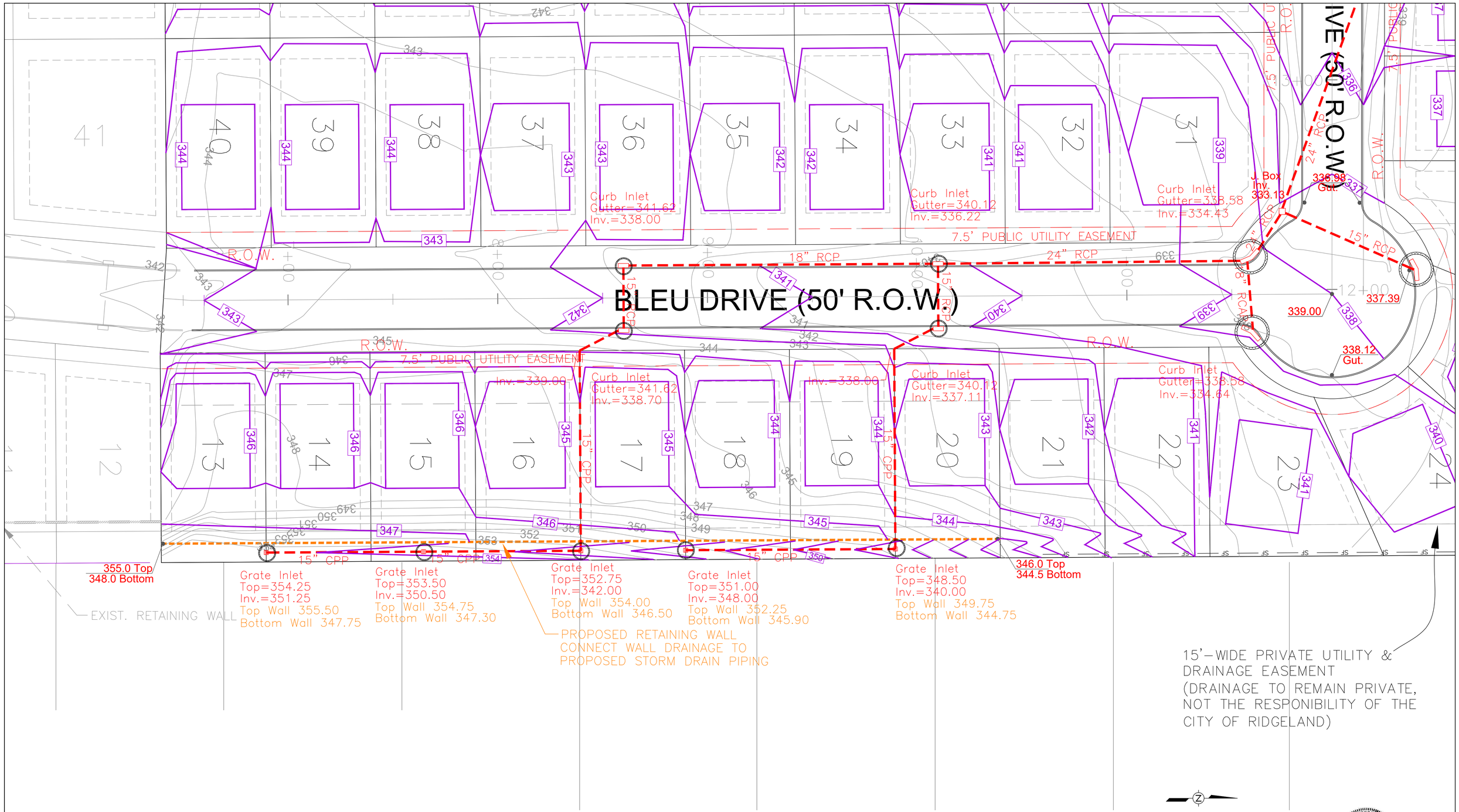

SHED ASPHALT.

REV.	DESCRIPTION OF REVISION	BY	REVISION DATE
3	CITY COMMENTS REVISIONS	MJA	9/3/24
2	SWPPP REVISIONS	MJA	7/11/24
1	CITY COMMENTS REVISIONS	MJA	4/19/24
0	ISSUED FOR REVIEW	MJA	1/31/24

Alford and Associates
Consulting Engineers
7112 Suite B Siwell Road
Byram, Mississippi 39272

GRADING/EROSION CONTROL PLAN

MAISON BLEU SUBDIVISION PHASE II
RIDGELAND, MISSISSIPPI

PROJECT No.

CAD FILE NAME

DRAWING
7 of 13

DEYOUNG DRIVE (50' R.O.W.)

BLEU DRIVE (50' R.O.W.)

BLEU DRIVE (50' R.O.W.)

Curb Inlet
Gutter=337.68
Inv.=334.68

Curb Inlet
Gutter=335.65
Inv.=332.44

Curb Inlet
Gutter=333.77
Inv.=329.81

Curb Inlet
Gutter=337.68
Inv.=334.88

Curb Inlet
Gutter=335.65
Inv.=332.64

Curb Inlet
Gutter=333.81
Inv.=330.06

Curb Inlet
Gutter=335.04
Inv.=331.49

Curb Inlet
Gutter=335.04
Inv.=331.29

Curb Inlet
Gutter=340.12
Inv.=336.22

Curb Inlet
Gutter=338.58
Inv.=334.43

Curb Inlet
Gutter=337.39
Inv.=334.45

Curb Inlet
Gutter=340.12
Inv.=337.11

Curb Inlet
Gutter=338.58
Inv.=334.64

Inlet
=341.62
338.00

Inlet
=341.62
338.70

Inv.=338.00

J. Box
328.88
Inv.

J. Box
Inv. 330.18

J. Box
Inv.
333.13

Top Wall 335.50
Bottom Wall 334.0

12"x12" Inline Drain
Top=334.00
Inv.=331.50
Top Wall 335.25
Bottom Wall 327.0

PROPOSED RETAINING WALL

12"x12" Inline Drain
Top=333.50
Inv.=331.00
Top Wall 334.75
Bottom Wall 328.25

12"x12" Inline Drain
Top=334.00
Inv.=331.50
Top Wall 335.25
Bottom Wall 330.0

Top Wall 335.50
Bottom Wall 334.0

15'-WIDE PRIVATE UTILITY & DRAINAGE EASEMENT (DRAINAGE TO REMAIN PRIVATE, NOT THE RESPONIBILITY OF THE CITY OF RIDGELAND)

CONCRETE WASHOUT/LAYDOWN AREA ON LOT 25, FINAL LOT TO BE DEVELOPED

334.75
High Pt.

334.10
Gut.

336.98
Gut.

339.00

337.39

338.12
Gut.

15" RCP

24" RCP

18" RCP

12" CPP

10" CPP

7.5' PUBLIC UTILITY EASEMENT

20' PUBLIC UTILITY EASEMENT

15' UTILITY EASEMENT

R.O.W.

144 LF 36"

SCALE
0' 10' 20' 40'

REV.	DESCRIPTION OF REVISION	BY	REVISION DATE
3	CITY COMMENTS REVISIONS	MJA	9/3/24
2	SWPPP REVISIONS	MJA	7/11/24
1	CITY COMMENTS REVISIONS	MJA	4/19/24
0	ISSUED FOR REVIEW	MJA	1/31/24

Alford and Associates
Consulting Engineers
7112 Suite B Siwell Road
Byram, Mississippi 39272

GRADING/EROSION CONTROL PLAN

MAISON BLEU SUBDIVISION PHASE II
RIDGELAND, MISSISSIPPI

PROJECT No.

CAD FILE NAME

DRAWING
8 of 13

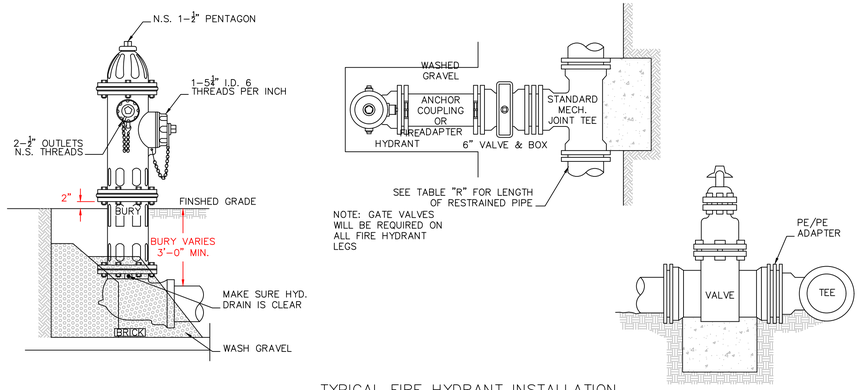

TYPICAL FIRE HYDRANT INSTALLATION
SCALE: N.T.S.

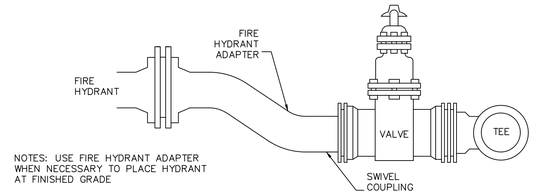

FIRE HYDRANT ADAPTER
SCALE: N.T.S.

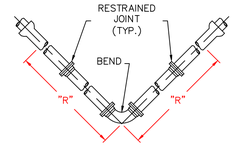

PIPE DIAMETER	"R" FOR 11¼° BEND	"R" FOR 22½° BEND	"R" FOR 45° BEND	"R" FOR 90° BEND	"R" FOR DEAD END
8"	2'	5'	13'	33'	25'
12"	4'	8'	17'	42'	37'
16"	5'	11'	23'	55'	49'
18"	6'	12'	25'	61'	55'
24"	8'	16'	33'	80'	73'
30"	10'	20'	41'	99'	90'

NOTES:
1. RESTRAINED JOINT PIPE SHALL BE USED AT ALL BENDS.
2. THE LENGTH OF RESTRAINED PIPE ON EACH SIDE OF THE BEND SHALL BE NOT LESS THAN THE "R" DISTANCES.
3. ALL JOINTS WITHIN THE DISTANCE "R" ESTABLISHED ABOVE SHALL BE RESTRAINED.
4. ALL PIPE IN CASINGS SHALL BE RESTRAINED, BUT PIPE LENGTHS IN CASING SHALL NOT APPLY TOWARD REQUIRED RESTRAINED LENGTHS FOR ADJACENT BENDS.
5. RESTRAINED JOINT LENGHTS WERE CALCULATED BASED ON DIPRA THRUST RESTRAINT GUIDELINES UNDER THE FOLLOWING CONDITIONS:
   LAYING CONDITION – TYPE 3
   SOIL DESIGNATION – CLAY 2
   DEPTH OF COVER – 3.5'
   DESIGN PRESSURE – 150 PSI
   SAFETY FACTOR – 1.5
   IF ANY OF THESE ASSUMPTIONS SIGNFICANTLY DIFFER FROM THE LAYING CONDITIONS, NEW THRUST RESTRAINT CALCULATIONS SHOULD BE PERFORMED.
6. FOR BENDS IN THE VERTICAL PLANE INCREASE THE "R" DISTANCE BY A FACTOR OF 1.75.

RESTRAINED JOINT DETAL
SCALE: N.T.S.

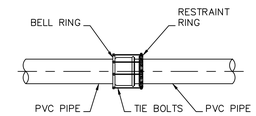

TYPICAL IN-LINE PVC RESTRAINED JOINT
SCALE: N.T.S.

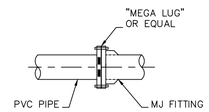

TYPICAL PVC RESTRAINED JOINT AT MJ FITTING
SCALE: N.T.S.

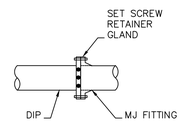

TYPICAL DI RESTRAINED JOINT AT MJ FITTING
SCALE: N.T.S.

NOTES: DIMENSION "A" TO BE 3'-6" MIN. FOR ALL CASINGS. DIMENSIONS "B" TO BE 2' MIN. FOR LINES 3" DIA. AND UNDER, AND 4' MIN. FOR LINES OVER 3". ENCASEMENTS TO BE INSTALLED UNDER THE ROAD BY MEANS OF JACKING THROUGH, OR BY DRY BORING A HOLE THAT WILL RECIEVE THE CASING WITH A SNUG FIT.

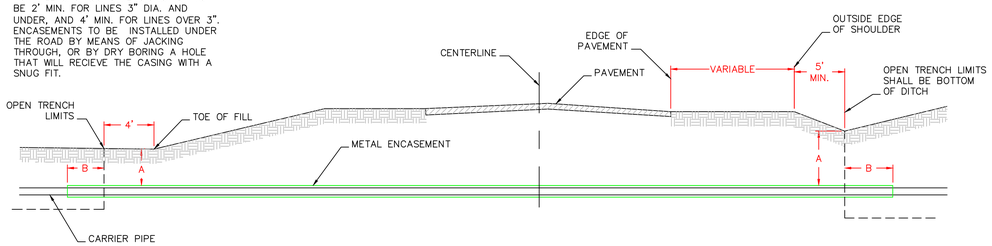

CROSS SECTION OF CONDUIT CROSSING
SCALE: N.T.S.

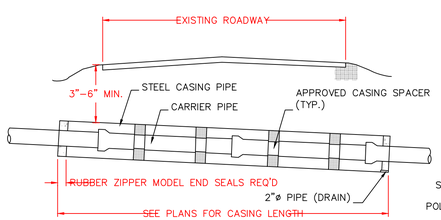

NOTES

1. SPACE CASING SPACERS ACCORDIND TO PIPE OR SPACER MANUFACTURE'S RECOMMENDATIONS OR 2 PER SECTION OF PIPE, WHICHEVER IS GREATEST, PLUS 1 WITHIN 2 FEET OF EACH END OF CROSSING.
2. PUSH OR PULL THE CARRIER PIPE THROUGH THE CASING SO THAT THE CARRIER JOINTS ARE ALWAYS COMPRESSED.

CASING SPACER DETAIL
SCALE: N.T.S.

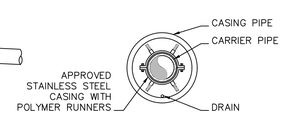

PIPE IN CASING END VIEW

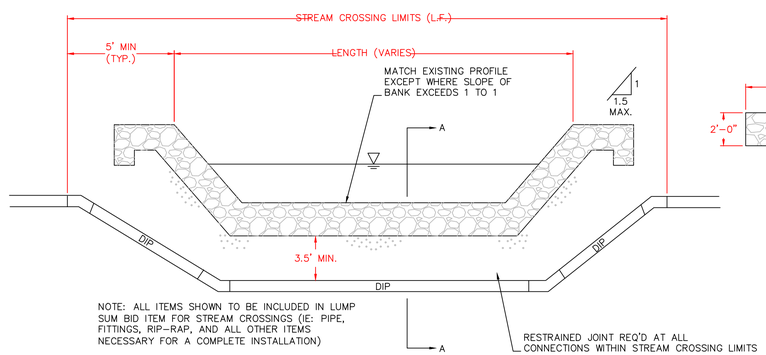

ELEVATION

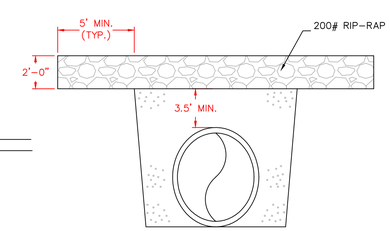

SECTION A-A

STREAM CROSSING
SCALE: N.T.S.

REV.	DESCRIPTION OF REVISION	BY	REVISION DATE
0			

Alford and Associates
Consulting Engineers
7112 Suite B Siwell Road
Byram, Mississippi 39272

WATER DETAILS

MAISON BLEU SUBDIVISION PHASE II
RIDGELAND, MISSISSIPPI

PROJECT No.
CAD FILE NAME
DRAWING
9 of 13

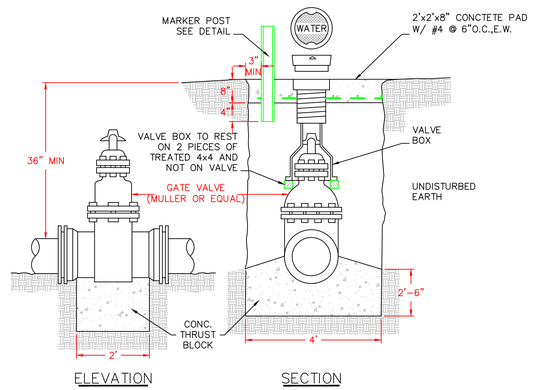

ELEVATION SECTION

GATE VALVE & BOX

SCALE: N.T.S.

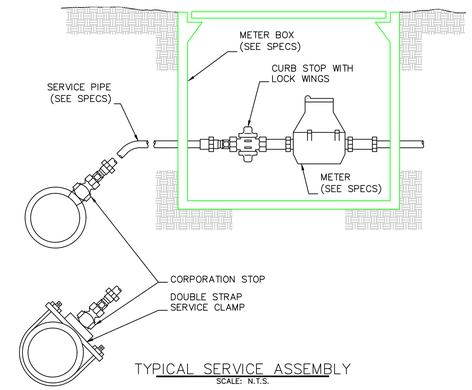

TYPICAL SERVICE ASSEMBLY

SCALE: N.T.S.

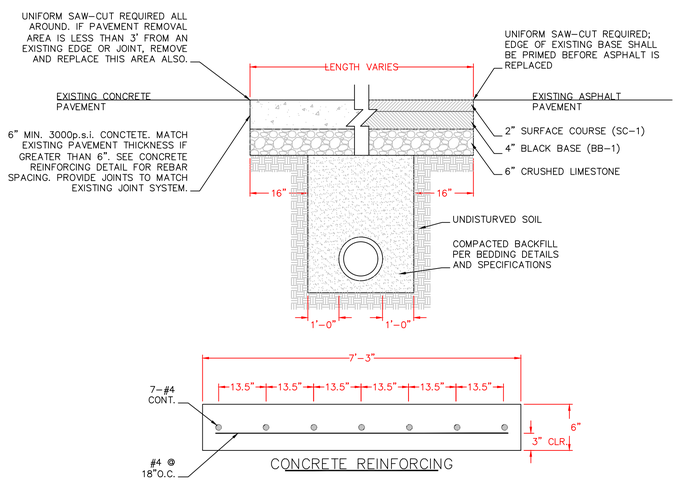

CONCRETE REINFORCING

STREET REPAIR OF OPEN CUT

SCALE: N.T.S.

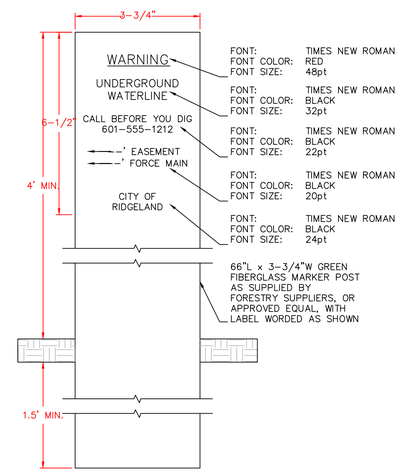

MARKER POST

SCALE: N.T.S.

NOTE:

1) DEWATERING REQUIRED TO THIS LEVEL (MIN.). THE CONTRACTOR SHALL MAINTAIN WATER LEVEL TO A LEVEL OF 18" OR GREATER BELOW THE UNDERCUT DEPTH OR THE TRENCH SUBGRADE, WHICHEVER IS DEEPER, BEFORE PIPE PLACEMENT WILL BE ALLOWED.

2) SEE SPECIFICATIONS FOR COMPACTION REQUIREMENTS AND MIN/MAX TRENCH WIDTH

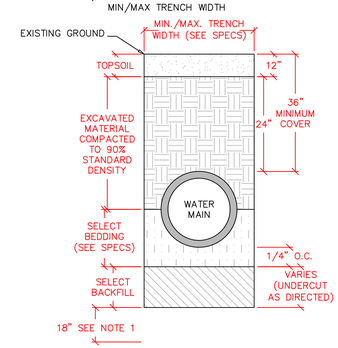

TRENCH DETAIL

SCALE: N.T.S.

REV.	DESCRIPTION OF REVISION	BY	REVISION DATE
0			

Alford and Associates
Consulting Engineers
7112 Suite B Siwell Road
Byram, Mississippi 39272

WATER DETAILS

MAISON BLEU SUBDIVISION PHASE II
RIDGELAND, MISSISSIPPI

PROJECT No.

CAD FILE NAME

DRAWING
10 of 13

NOTE:

1) DEWATERING REQUIRED TO THIS LEVEL (MIN.). THE CONTRACTOR SHALL MAINTAIN WATER LEVEL TO A LEVEL OF 18" OR GREATER BELOW THE UNDERCUT DEPTH OR THE TRENCH SUBGRADE, WHICHEVER IS DEEPER, BEFORE PIPE PLACEMENT WILL BE ALLOWED.

2) SEE SPECIFICATIONS FOR COMPACTION REQUIREMENTS AND MIN/MAX TRENCH WIDTH

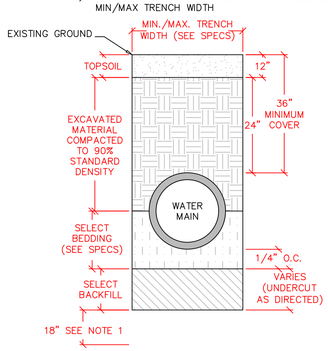

TRENCH DETAIL
SCALE: N.T.S.

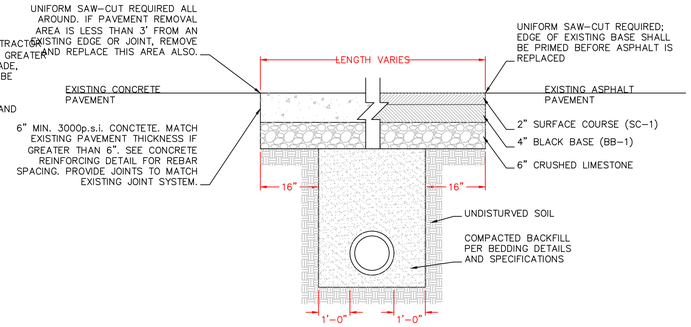

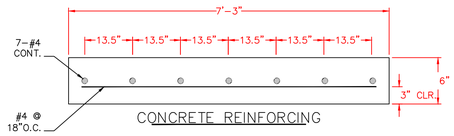

CONCRETE REINFORCING

STREET REPAIR OF OPEN CUT
SCALE: N.T.S.

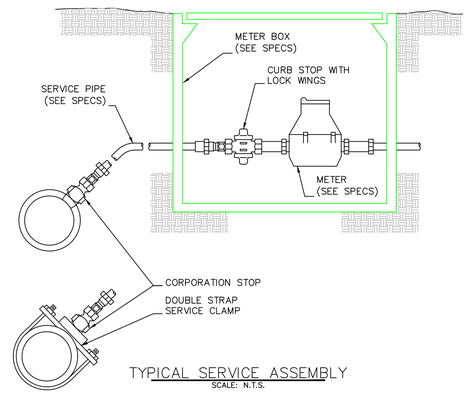

TYPICAL SERVICE ASSEMBLY
SCALE: N.T.S.

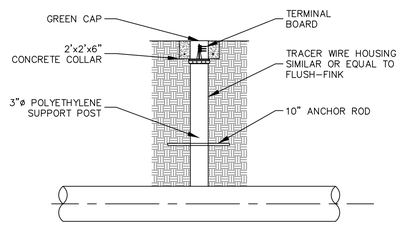

NOTE:
1. THE CONTRACTOR SHALL CONNECT THE TRACER TAPE TO THE TERMINAL BOARD.
2. HOUSINGS TO BE LOCATED AT EACH FIRE HYDRANT.
3. TRACER WIRE HOUSING SHALL BE CONSIDERED AN ABSORBED COST ITEM.

TRACER WIRE HOUSING
SCALE: N.T.S.

NOTE:
TAPS, CORPORATION STOPS, SERVICE CLAMPS, CURB STOPS, AND ANY FITTINGS REQUIRED TO CAP OR CONNECT SERVICE LINES SHALL BE AN ABSORBED COST.

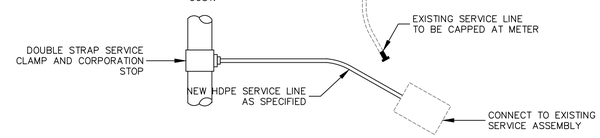

RECONNECTION, PLAN VIEW
SCALE: N.T.S.

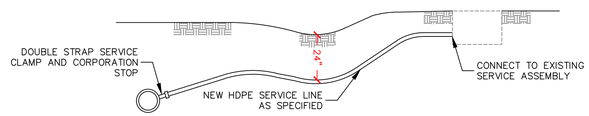

RECONNECTION, PROFILE VIEW
SCALE: N.T.S.

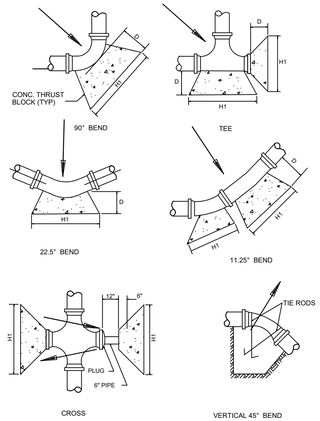

NOTES:
1. ARROWS INDICATE DIRECTION OF THRUST.
2. THRUST BLOCKS TO BEAR AGAINST UNDISTURBED EARTH.
3. THRUST BLOCKS TO BE CONCRETE WITH A MINIMUM 3000 PSI COMPRESSIVE STRENGTH.

TABLE OF DIMENSIONS FOR CONCRETE THRUST BLOCKS

SIZE OF PIPE	TAPPING SLEEVES TEES AND PLUGS					90° BENDS					45° BENDS					22.5° BENDS					11.25° BENDS				
	H1	H2	V	D	CU FT	H1	H2	V	D	CU FT	H1	H2	V	D	CU FT	H1	H2	V	D	CU FT	H1	H2	V	D	CU FT
2" & 2 1/4"	18"	12"	12"	12"	1.90	18"	12"	12"	18"	1.95	18"	6"	12"	18"	1.90	18"	6"	12"	18"	1.50	18"	6"	12"	18"	1.50
2 & 4"	24"	18"	12"	12"	2.25	24"	18"	12"	18"	2.25	24"	12"	18"	18"	3.60	24"	12"	18"	18"	1.80	24"	12"	18"	18"	1.80
6"	30"	18"	18"	18"	3.05	30"	18"	18"	18"	4.05	30"	18"	21"	18"	5.25	24"	11"	18"	18"	3.20	24"	12"	18"	18"	3.20
8"	36"	24"	18"	18"	7.15	36"	24"	18"	18"	7.30	36"	24"	24"	18"	7.30	30"	18"	21"	18"	3.40	30"	18"	21"	18"	3.40
10"	45"	24"	18"	18"	13.40	54"	30"	24"	18"	10.25	54"	30"	24"	18"	10.25	24"	18"	21"	18"	4.60	24"	18"	21"	18"	4.60
12"	54"	30"	24"	18"	22.50	60"	36"	24"	18"	13.00	60"	36"	24"	18"	13.00	30"	24"	21"	18"	6.10	30"	24"	21"	18"	6.10
16"	66"	36"		36"		66"	48"	24"	18"	17.0	66"	48"	24"	18"	17.0	36"	27"	24"	18"	11.8	27"	27"	24"	18"	9.10
20"		48"					48"	24"				60"	24"	24"				24"	24"			30"			
24"		60"					60"	24"				66"	24"	24"				24"	24"			42"			
30"		72"					72"	24"				72"	24"	24"				24"	24"			48"			

THRUST BLOCKS

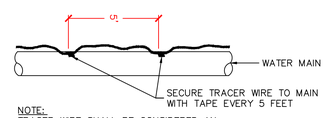

NOTE:
TRACER WIRE SHALL BE CONSIDERED AN ABSORBED COST ITEM.

TRACER WIRE INSTALLATION
SCALE: N.T.S.

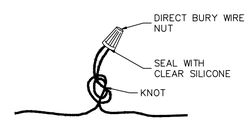

DIRECT BURY WIRE NUT CONNECTION
SCALE: N.T.S.

NOTE:
TAPS, CORPORATION STOPS, SERVICE CLAMPS, CURB STOPS, AND ANY FITTINGS REQUIRED TO CAP OR CONNECT SERVICE LINES SHALL BE AN ABSORBED COST.

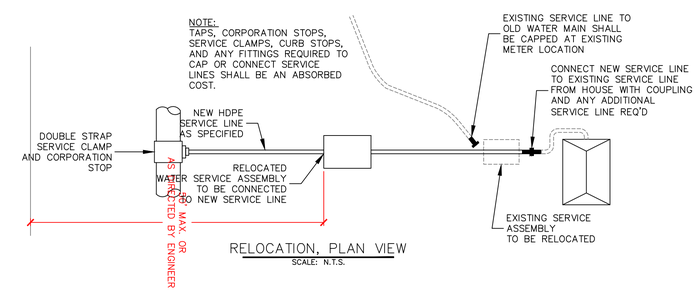

RELOCATION, PLAN VIEW
SCALE: N.T.S.

TYPICAL WATER SERVICE CONNECTIONS TO NEW WATER MAIN

REV.	DESCRIPTION OF REVISION	BY	REVISION DATE
0			

Alford and Associates
Consulting Engineers
7112 Suite B Sivell Road
Byram, Mississippi 39272

WATER DETAILS

MAISON BLEU SUBDIVISION PHASE II
RIDGELAND, MISSISSIPPI

PROJECT No.
CAD FILE NAME
DRAWING
11 of 13

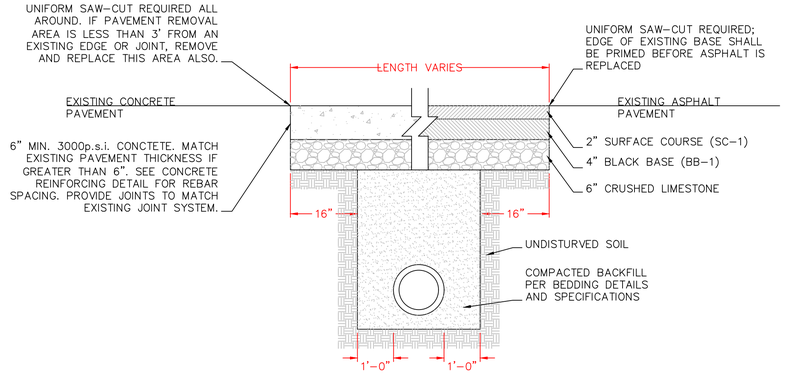

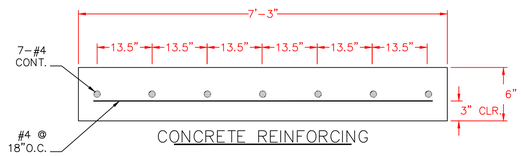

CONCRETE REINFORCING

STREET REPAIR OF OPEN CUT

SCALE: N.T.S.

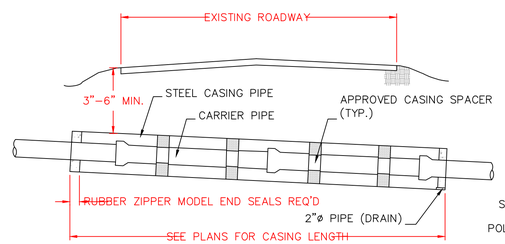

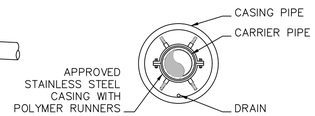

PIPE IN CASING END VIEW

NOTES

1. SPACE CASING SPACERS ACCORDIND TO PIPE OR SPACER MANUFACTURE'S RECOMMENDATIONS OR 2 PER SECTION OF PIPE, WHICHEVER IS GREATEST, PLUS 1 WITHIN 2 FEET OF EACH END OF CROSSING.
2. PUSH OR PULL THE CARRIER PIPE THROUGH THE CASING SO THAT THE CARRIER JOINTS ARE ALWAYS COMPRESSED.

CASING SPACER DETAIL

SCALE: N.T.S.

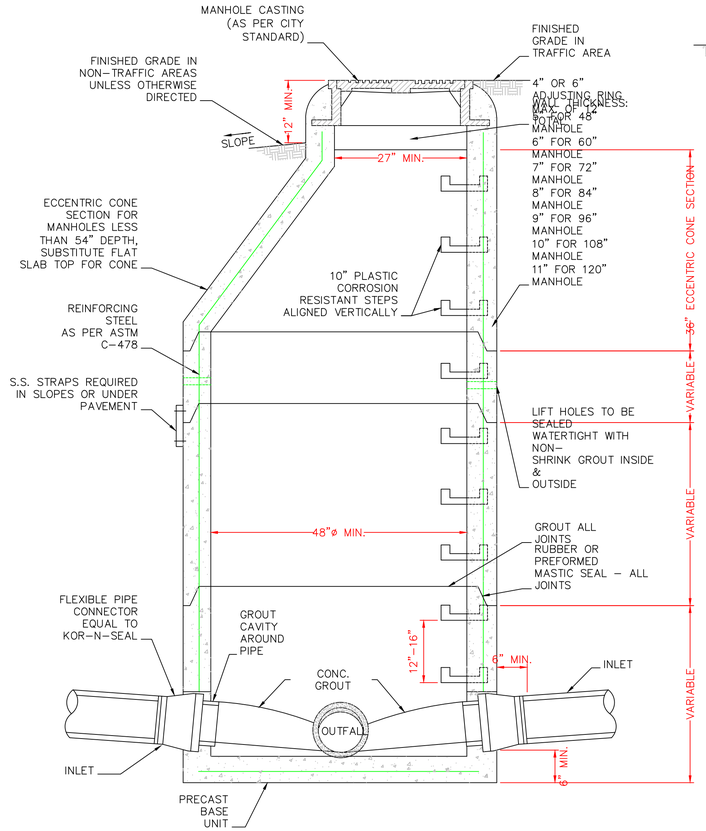

SECTION - PRECAST CONC. MANHOLE

SCALE: N.T.S.

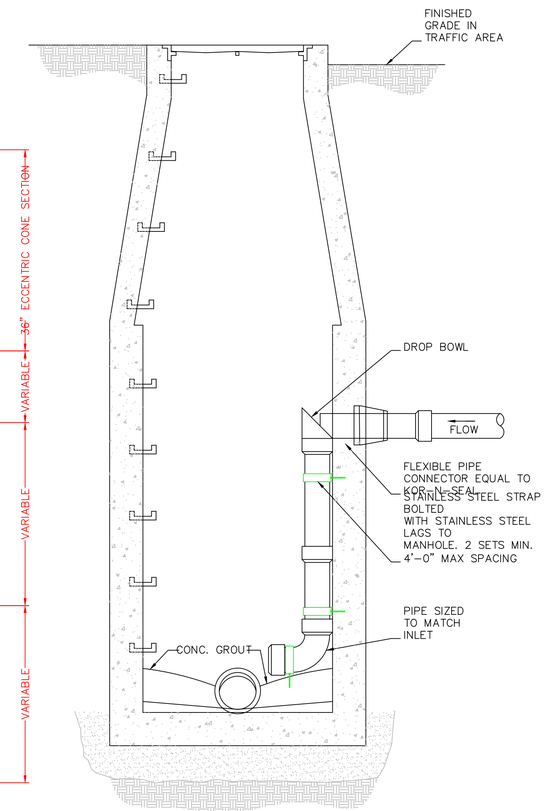

INSIDE DROP INLET

SCALE: N.T.S.

NOTE:

1) DEWATERING REQUIRED TO THIS LEVEL (MIN.). THE CONTRACTOR SHALL MAINTAIN WATER LEVEL TO A LEVEL OF 18" OR GREATER BELOW THE UNDERCUT DEPTH OR THE TRENCH SUBGRADE, WHICHEVER IS DEEPER, BEFORE PIPE PLACEMENT WILL BE ALLOWED.

2) SEE SPECIFICATIONS FOR COMPACTION REQUIREMENTS AND MIN/MAX TRENCH WIDTH

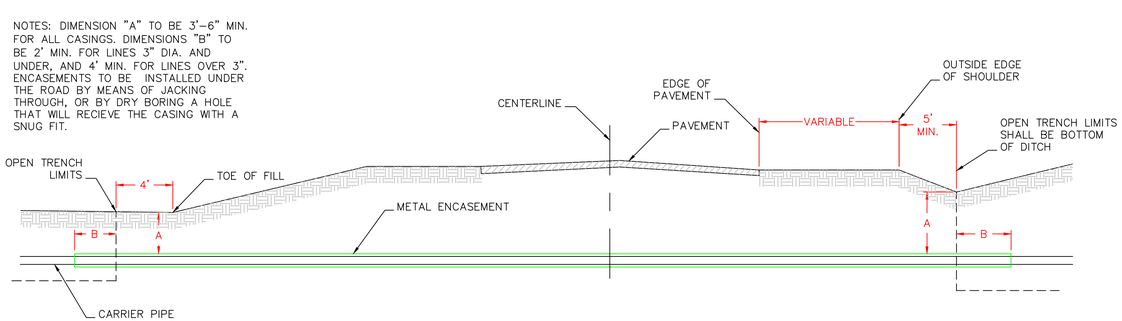

CROSS SECTION OF CONDUIT CROSSING

SCALE: N.T.S.

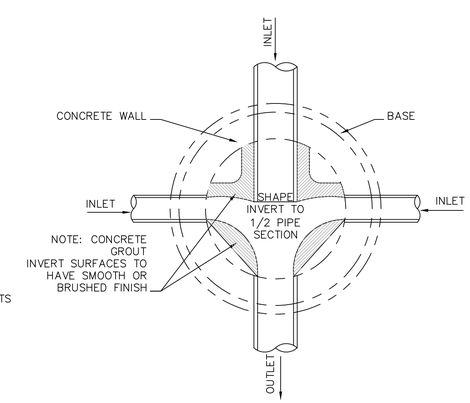

PLAN - MANHOLE FLOW CHANNELS

SCALE: N.T.S.

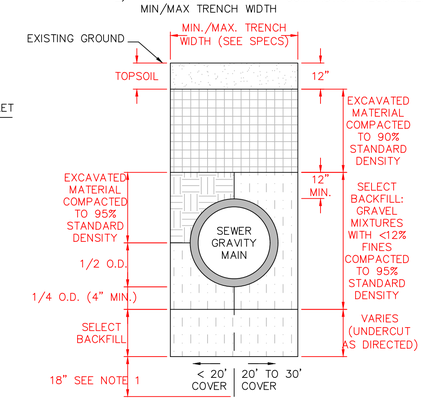

GRAVITY SEWER TRENCH DETAIL

SCALE: N.T.S.

REV.	DESCRIPTION OF REVISION	BY	REVISION DATE
0	ISSUED FOR REVIEW	MJA	1/31/24

Alford and Associates
Consulting Engineers
7112 Suite B Siwell Road
Byram, Mississippi 39272

SEWER DETAILS

MAISON BLEU SUBDIVISION PHASE II
RIDGELAND, MISSISSIPPI

PROJECT No.

CAD FILE NAME

DRAWING

12 of 13

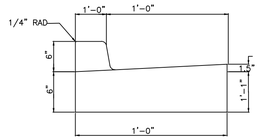

NOTE:
DUMMY JOINTS WILL BE MADE AT 10' INTERVALS. EXPANSION JOINTS WILL BE MADE AT 40' INTERVALS AND PRECUT JOINT MATERIAL TEMPLATES WILL BE USED IN ALL EXPANSION JOINTS.

CURB AND GUTTER

NOT TO SCALE

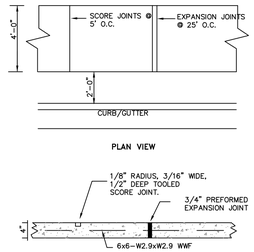

CONTRACTOR MAY OMIT WELDED WIRE FABRIC IF CONCRETE CONTAINS FIBROUS REINFORCEMENT.

CONCRETE SHALL HAVE 3000 PSI AT 28 DAYS.

SIDEWALK

SCALE: NONE

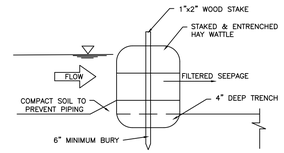

HAY WATTLE INSTALLATION

SCALE: SHOWN

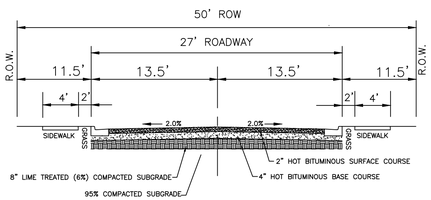

TYPICAL CUL-DE-SAC STREET CROSS-SECTION

N.T.S.

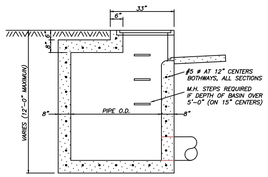

SECTION THRU CATCHBASIN
PRECAST OR POURED IN PLACE

CURB INLET DETAIL

NOT TO SCALE

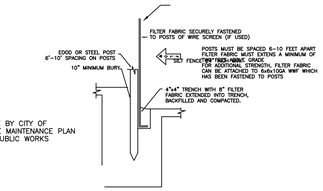

CONTRACTOR TO ABIDE BY CITY OF RIDGELAND SILT FENCE MAINTENANCE PLAN AVAILABLE THROUGH PUBLIC WORKS

SILT FENCE TYPICAL SECTION

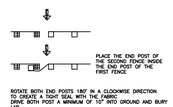

ATTACHING TWO SILT FENCES

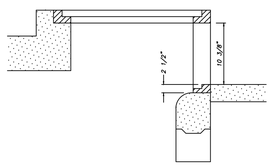

INLET CONFIGURATION

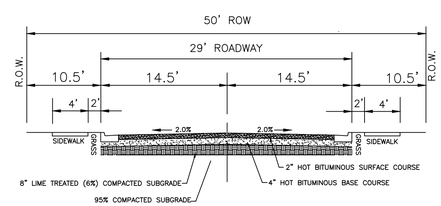

TYPICAL STREET CROSS-SECTION

N.T.S.

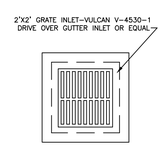

PLAN

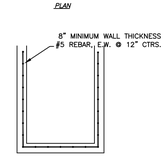

SECTION THRU JUNCTION BOX
PRECAST OR POURED IN PLACE

ELEVATION

GRATE INLET

SCALE: NONE

SILT FENCE MAINTENANCE PLAN

1. CARE SHALL BE TAKEN TO MINIMIZE THE MOVEMENT OF SEDIMENT INTO ALL STORM DRAOM APPURTENANCES AND PUBLIC STREETS UNTIL THE IMPERVIOUS MATERIAL (ROAD/PARKING AREA SURFACE) IS APPLIED.
2. A DROP INLET SEDIMENT TRAP WITH PERIMETER SILT FENCING OR PROPERLY INSTALLED HAYBALE BARRIERS IS THE RECOMMEND METHOD OF INLET PROTECTION. SEDIMENT WILL BE REMOVED FROM THE EXCAVATED DROP INLET SEDIMENT TRAP AND RESTORED TO THE ORIGINAL DEPTH WHEN SEDIMENT ACCUMULATION HAS REACHED HALF THE DEPTH OF THE TRAP.
3. ALL EROSION AND SEDIMENT CONTROL MEASURES WILL BE CHECKED FOR STABILITY AND OPERATIONAL INTEGRITY FOLLOWING EVERY RUNOFF PRODUCING RAINFALL BUT IN NO CASE, LESS THAN EVERY WEEK. ANDY NECESSARY REPAIRS WILL BE MADE IMMEDIATELY TO MAINTAIN THE MEASURE'S PERFORMANCE AS DESIGNATED.
4. SEDIMENT WIL BE REMOVED FROM THE UPSTREAM FACE OF THE SILT FENCE WHEN IT REACHES A MAXIMUM SIX-INCH (6") DEPTH AT THE FENCE. THE FENCE WILL BE REPLACED AS NECESSARY TO MAINTAIN A BARRIER.

REV.	DESCRIPTION OF REVISION	BY	REVISION DATE
0	ISSUED FOR REVIEW	MJA	1/31/24

Alford and Associates
Consulting Engineers
7112 Suite B Siwell Road
Byram, Mississippi 39272

MISCELLANEOUS DETAILS

MAISON BLEU SUBDIVISION PHASE II
RIDGELAND, MISSISSIPPI

PROJECT No.

CAD FILE NAME

DRAWING

NOTES:

1. **The wall design is only for the retaining walls denoted on the "Grading/Erosion Control Plan, Maison Bleu Subdivision Phase II, Ridgeland, MS," by Alford and Associates Consulting Engineers.**
2. **Install blocks and tie-back grid (including fiberglass pins) per manufacturer's recommendations.**
3. **Fill block voids with crushed stone or gravel.**
4. **Drainage pipes in wall drainage stone backfill are intended to protect the wall from water pressure buildup, not to be a drainage feature of the property. Ensure other drainage features of the property behind the wall and drainage away from front base of wall.**
5. **It is understood that the site is underlain with near-surface expansive clay (CH). Fill soils should be low shrink-swell potential firm silty clays placed in lift layers not to exceed 8 inches and then compacted to at least 95 percent of the standard Proctor maximum dry density and at +/- 2% of the optimum moisture content. Structural clay fill materials should have a maximum particle size of less than 3 inches, a liquid limit less than 40, and plasticity index between 12 and 22 and plot below the A-Line on the Plasticity chart. The fill material should be free of debris and organic material. Quality control with density and moisture content measurements for each lift is required. The described fill soil type and placement process is to be installed in the volume behind the wall for height of the wall and the length of the tie-back grid material, and for at least 18 inches below the bottom of the crushed limestone foundation pad, and for at least 3-ft out from the front of the wall. After achieving required undercutting below the crushed limestone pad, the exposed soil should be scarified to a minimum depth of 8 inches and compacted to at least 95 percent of the standard Proctor maximum dry density (ASTM D 698). Stability (lack of significant pumping of soil during compaction) should be ensured. If pumping occurs, it may be remedied with the introduction of 4 to 6 percent (or as required) hydrated lime (of dry weight of soil).**

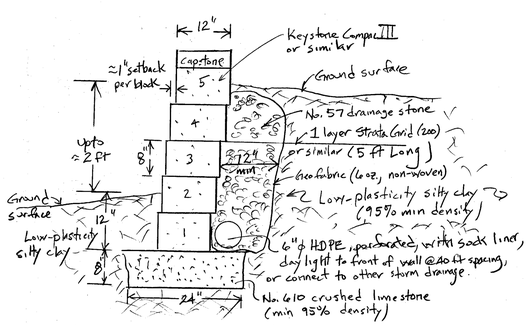

WALL Up to 2ft SOIL DIFFERENTIAL HEIGHT

Elevation View, 3/4"=1'-0"

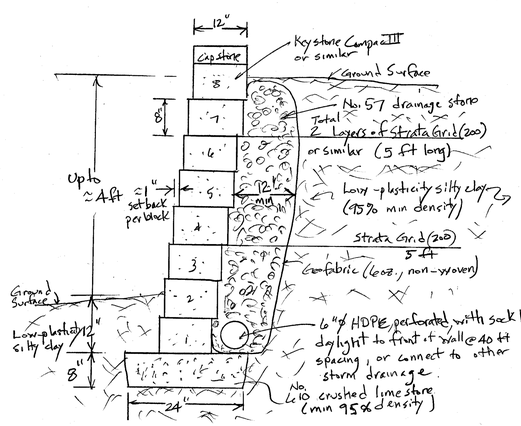

WALL UP to 4ft SOIL DIFFERENTIAL HEIGHT

Elevation View 3/4"=1'-0"

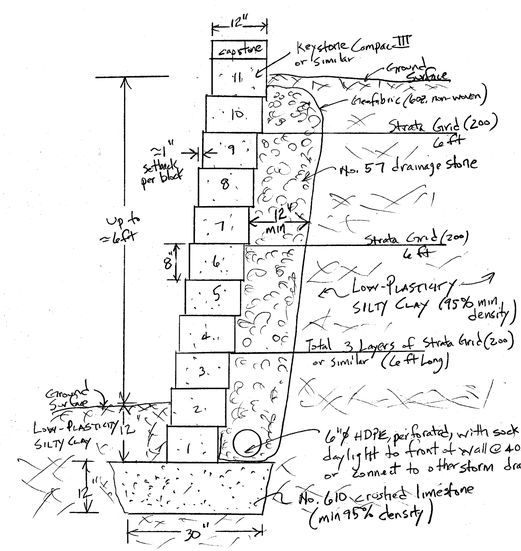

WALL Up to 6ft SOIL DIFFERENTIAL HEIGHT

Elevation View 3/4"=1'-0"

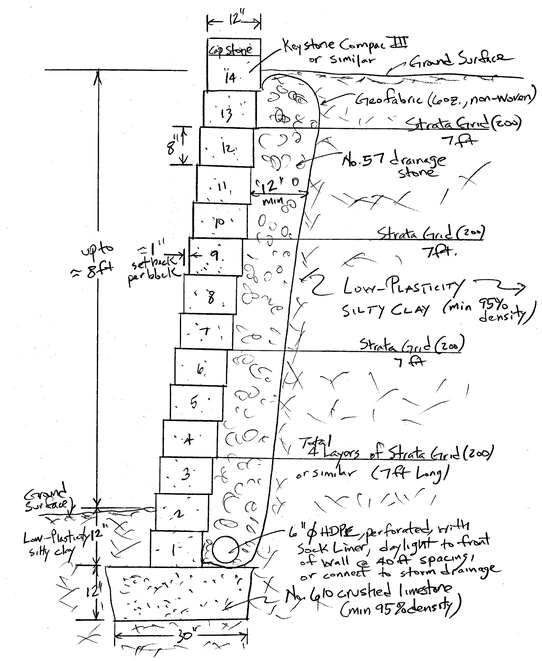

WALL Up to 8ft SOIL DIFFERENTIAL HEIGHT

Elevation View 3/4"=1'-0"

RETAINING WALL DESIGN FOR MAISON BLEU SUBDIVISION, PHASE II - 49 LOTS, RIDGELAND, MS

STANLEY C. WOODSON, REGISTERED PROFESSIONAL ENGINEER, 9473, STATE OF MISSISSIPPI

Wall Design by:
Stanley C. Woodson, PhD, PE
Woodson Engineering Inc.
Vicksburg , MS 39180
Phone: 601-529-5874

The Redi-Rock® Cobblestone texture is available on any Redi-Rock block. This gives you endless possibilities to create a complete wall solution for your project.

REDI-ROCK TEXTURE:

COBBLESTONE

Calling all blockheads! Redi-Rock Cobblestone blocks feature a double-whammy—engineering ingenuity *and* dashing good looks. The result is the best looking structural walls on the market.

Cobblestone blocks have a great stacked stone aesthetic. Each one-ton block features the appearance of six smaller blocks, making it a great look for projects that need a smaller-scale look.

Cobblestone Block Specifications

- Stacked stone texture
- 5.75 square feet (0.5 square meters) of face
- Four unique faces to give walls a random aesthetic
- Up to 23 square feet (2 square meters) of non-repeating texture available
- Wet-cast concrete gives a greater level of detail and durability

Regional colors and coordinating accessories are available. Contact your local Redi-Rock retailer or visit **redi-rock.com** to learn more about the Redi-Rock Cobblestone face today!

COBBLESTONE CASE STUDY

Redi-Rock Gravity Walls Level Lot for Custom Sports Court

The Challenge

When the owners of this Washington home wanted to install a tennis/basketball court, their hilly property presented some unique challenges. To create enough space for a court, they needed to contend with a 20-foot (6 meter) elevation change on the proposed site.

The Solution

Copper Creek Landscaping considered several options with the owners, including a poured-in-place wall.

"We just thought [a poured-in-place wall] would be too sterile and not aesthetically pleasing," explained Matt Barton, owner of Copper Creek Landscaping.

"We wanted really straight, square walls though, so obviously a boulder retaining wall wouldn't have worked. We had a lot of restrictions with what we were trying to do, and Redi-Rock was the perfect product that allowed us to do everything we needed to do," said Barton.

The biggest selling point of the Redi-Rock system was the ability to build retaining walls without requiring geogrid. After re-grading the area, the tallest wall required was still 11 feet (3.4 meters) and was installed as a gravity structure. This saved installers time because they did not have to excavate for geogrid, in turn saving the owners money. Plus, the aesthetic Cobblestone texture complimented the nearby home.

"We really liked the aesthetics of Redi-Rock because it blends in nicely with the surrounding terrain. We worked with Wilbert to do the custom work and they did a great job. We are really pleased with how it turned out—and we know it's not going anywhere," said owner Jeff Stockdale.

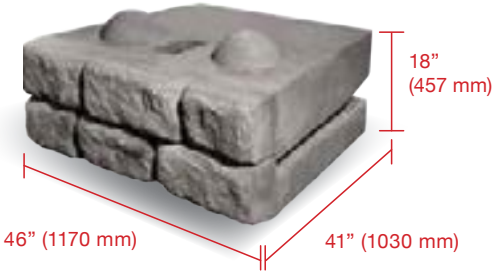

5.75 square feet of face - 2310 pounds
(0.5 square meters of face - 1050 kilograms)

Project: Liberty Lake Sports Court ***Customer:*** Liberty Lake Residence ***Block Manufacturer:*** Wilbert Precast ***Wall Installer:*** Copper Creek Landscaping; Wilbert Precast ***Location:*** Liberty Lake, Washington ***Completed:*** 2010

Your Complete Wall Solution—Each block in the Redi-Rock system is available in any texture and can coordinate in the same wall, giving you the flexibility you need.

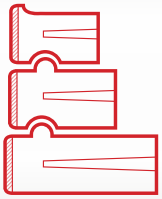

Gravity Walls
(shown above)

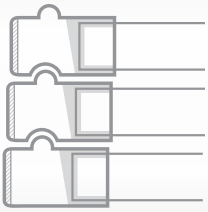

MSE Walls

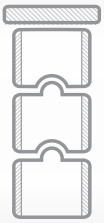

Freestanding Walls

See **redi-rock.com** for additional products and accessories.

REDI-ROCK

Contact your local Redi-Rock retailer or visit **redi-rock.com** to learn more about the Redi-Rock Cobblestone face today!

© 2015 Redi-Rock International, LLC
Form No. RRI-003-061015CTS

MAISON BLEU PHASE II

A DISTINCTIVE GATED COMMUNITY WITH RESTRICTIVE COVENANTS

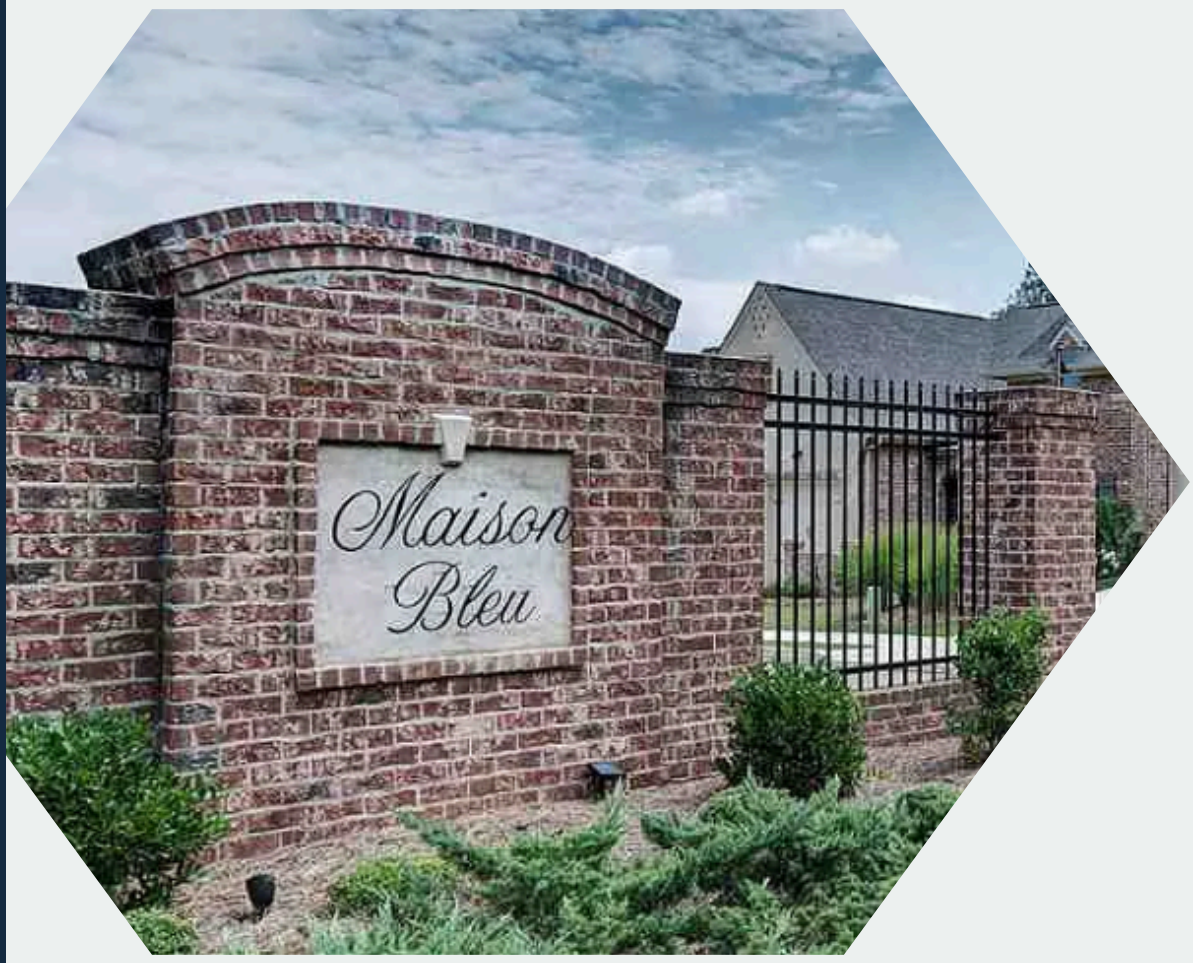

Maison Bleu

Ridgeland, MS

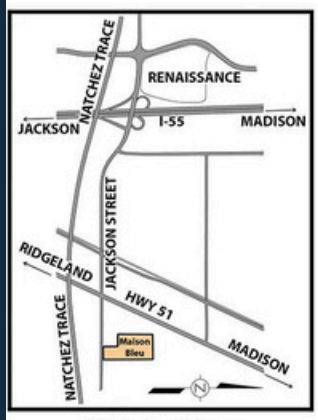

Vicinity Map

EXTERIOR BRICK

Old Towne

Bourbon Street

Brookhaven

EXTERIOR FINISHES

DOVER

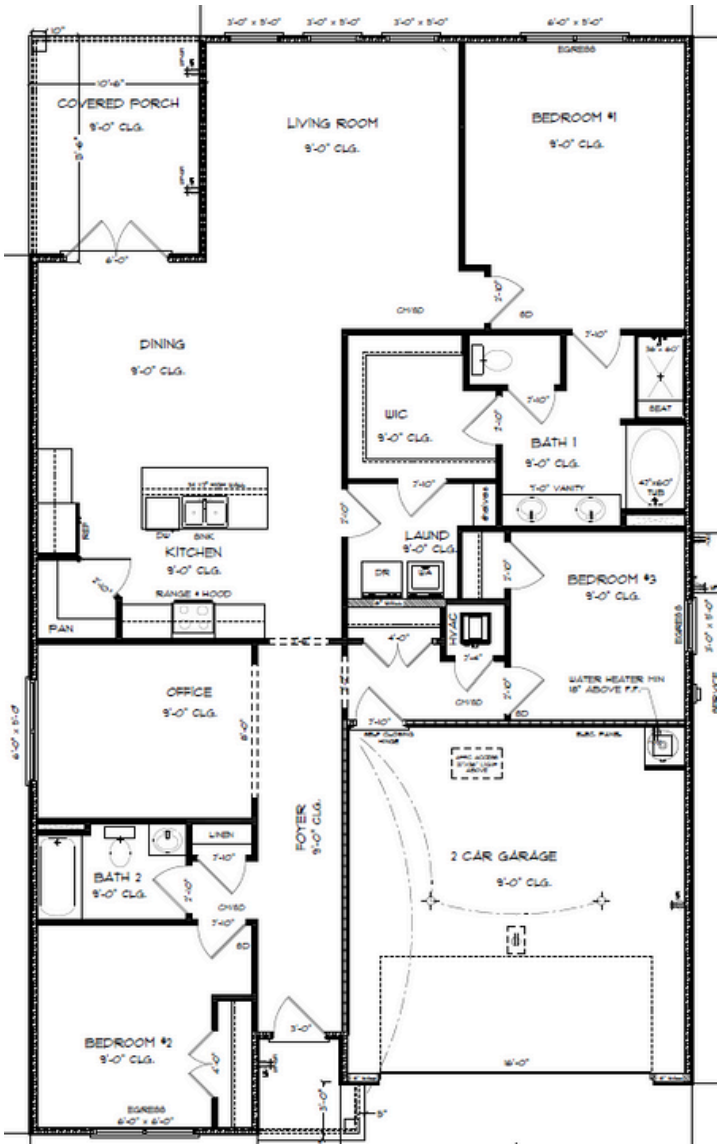

SQUARE FEET SCHEDULE	
LIVING AREA	1,884
FRONT PORCH	109
REAR PORCH	130
GARAGE	431
TOTAL UNDER ROOF	2,554

RIVERSIDE

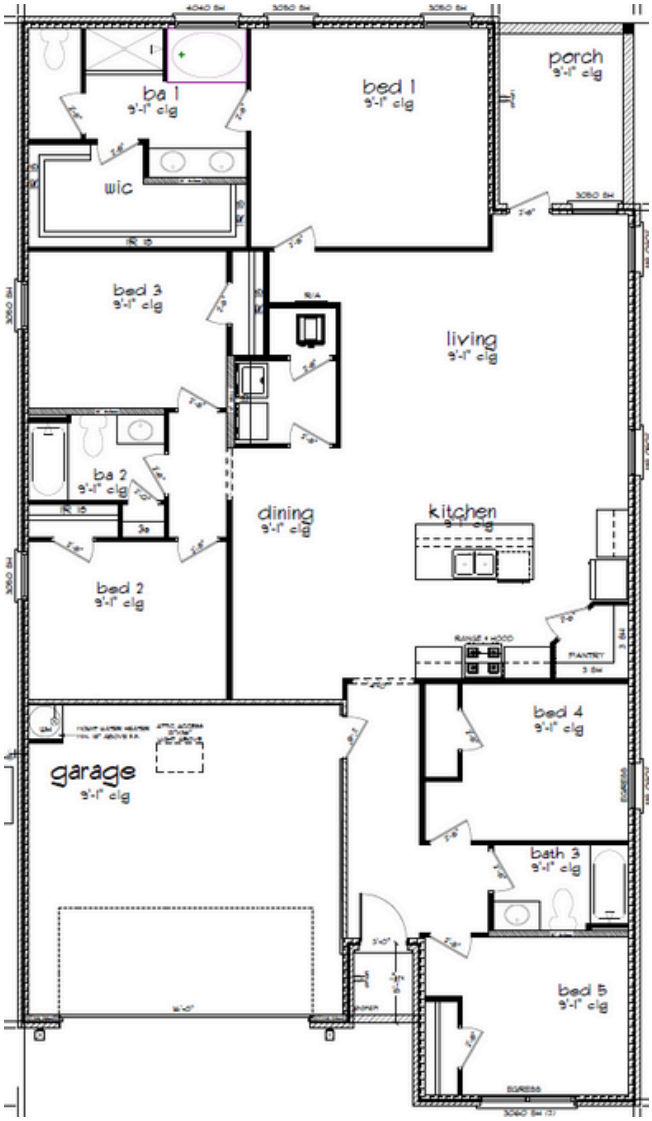

SQUARE FEET A SCHEDULE	
LIVING AREA	2017
FRONT PORCH	24
REAR PORCH	108
GARAGE	422
-	-
TOTAL UNDER ROOF	2571

CLIFTON

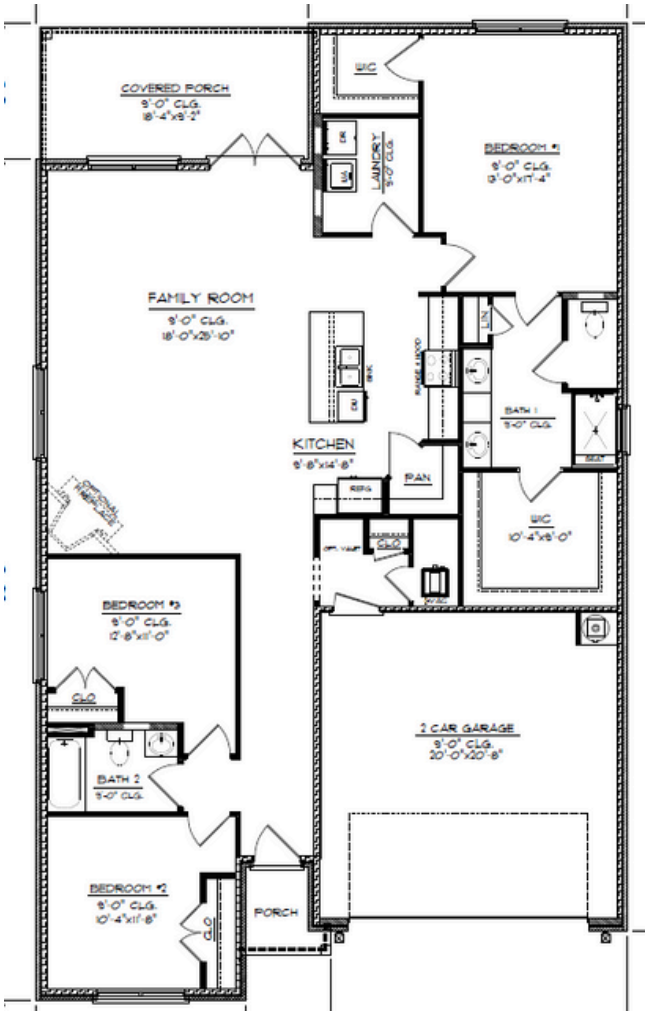

SQUARE FEET SCHEDULE	
LIVING AREA	2018
FRONT PORCH	147
REAR PORCH	189
GARAGE	439
TOTAL UNDER ROOF	2793

RHETT

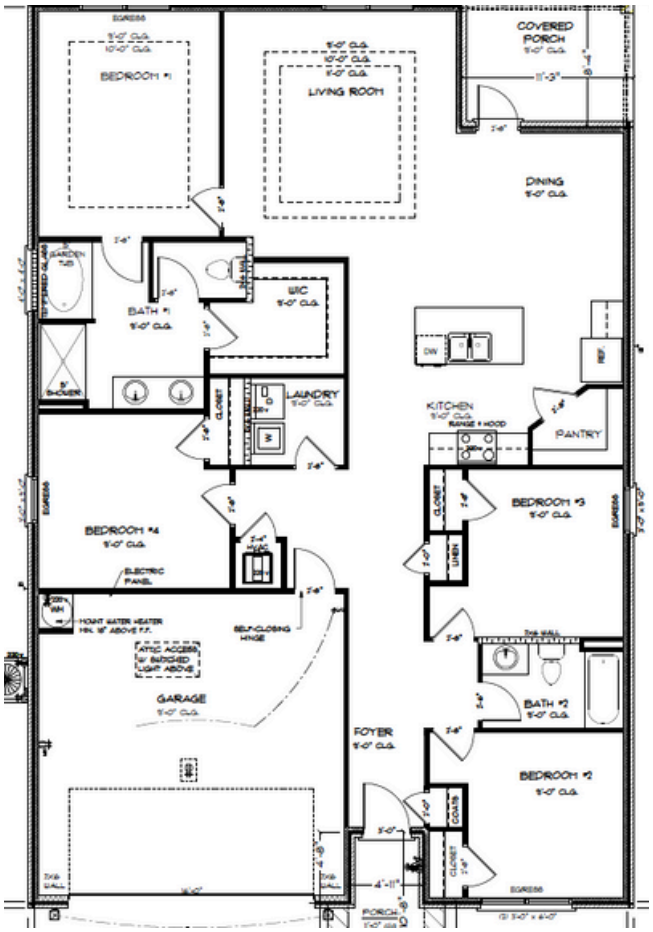

SQUARE FEET SCHEDULE	
LIVING AREA	1830
FRONT PORCH	18
REAR PORCH	88
GARAGE	416
-	-
TOTAL UNDER ROOF	2296

the city of RIDGELAND

January 6, 2025

TO: Mayor & Board of Alderman

FROM: Matt Bailey, Chief of Fire MB

SUBJECT: Repair for roof of Station 3

Please review and approve quotes to repair bay area of roof at station 3. I have attached (2) quotes per the new state law. The quotes are from M&S Roofing Co & Strenght Roofing & Siding.

Your consideration and approval of the quote from M&S roofing will be greatly appreciated.

Sincerely,

Matt Bailey
Chief of Fire

mailing address: p.o. box 217 • ridgeland, ms 39158
street address: 100 W. School St. • ridgeland, ms 39157
ph: 601.856.7113 • www.ridgelandms.org

Gene F. McGee, cmo - mayor • Mathew Bailey – fire chief

board of aldermen: D.I. Smith, cmo - at-large • Ken Heard, cmo - ward 1 • Chuck Gautier, cmo - ward 2
Kevin Holder, cmo - ward 3 • Brian P. Ramsey, cmo - ward 4 • Bill Lee - ward 5 • Wesley Hamlin, cmo, mayor pro tempore - ward 6

M&S Roofing Co., Inc.

M&S Roofing Co., Inc.
P.O. BOX 5497 PEARL, MS 39288-5497
PHONE 601-932-3913 FAX 601-932-8331

POPOSAL DATE: **5/15/24 (Revised 11-22-24)**

JOB: **Ridgeland Fire Station**

BY: **Leland Hinton, Project Manager**
Office: 601-932-3913
Cell: 601-757-3542

DESCRIPTION:

Membrane Roofing- **Fully Adhered .060 TPO Membrane Roof System**

- Tear off and dispose of existing roof systems and associated insulation down to the metal decking.
- Mechanically Attach a base layer of 3.5" Polyiso (R-20 Min)
- Mechanically Attach Tapered PolyIso Crickets between roof drains for positive drainage
- Fully Adhere a .060 TPO membrane over the PolyIso
- Wrap membrane up and over parapet walls.
- Flash All Penetrations per manufacturer's specifications.
- Install new Metal Coping at Parapet Walls
  - 24 Gauge Steel; Standard Color
- Provide a 20-Year Manufacturer's Warranty with 55 MPH windspeed coverage
- Provide a Standard 1-Year Contractor's Warranty.

Total Base Proposal Cost: **$49,510.00 (Excludes Taxes)**

Exclusions: Asbestos testing/abatement, replacement of metal decking, work outside of normal business hours, and taxes

Leland Hinton
M&S Roofing Company Inc. / Project Manger
Cell: 601-757-3542 / Office: 601-932-3913

Certificate of Responsibility – 09074
Proposal Valid for 30 Days

M & S Roofing Company Inc. Bid based on an unamended AIA Contract

Strength Roofing & Siding

6016 Interstate 55 Byram, MS 39272
Office Phone : 601.373.7254
Email : Brentley@RoofingMS.com
Representative : Brentley Prestwood
Cell Phone: 601.966.7049

Quotes:

Ridgeland Fire Dept

880 Rice Rd

Ridgeland, MS 39157

October 18, 2024

Scope of work option 1: 60 mil TPO roofing membrane (full tear off - recommended)

- Remove existing roofing membrane and insulation and dispose of all debris
- Install 2" iso insulation board
- Install 60 mil TPO roofing membrane
- Robo-weld all seams
- Install termination bar
- 20 year manufacturer warranty
- 10 year workmanship warranty thru Strength Roofing

Total: $31,997 (replace fiberglass skylight with 26 gauge colored metal roof for an additional $3,000)

Scope of work option 2: 60 mil TPO roofing membrane (tear off/layover)

- Remove existing roof membrane and dispose
- Install 1" iso insulation coverboard over existing insulation
- Install 60 mil TPO roofing membrane
- Robo-weld all seams
- Install termination bar
- 20 year manufacturer warranty
- 10 year workmanship warranty

Total: $23,887 (replace skylight with 26 gauge colored metal roof for additional $3,000)

Scope of work option 3: 60 mil TPO roofing membrane (layover)

- **Install fan fold insulation**
- **Install 60 mil TPO roofing membrane**
- **Robo-weld all seams**
- **Install termination bar**
- **20 year manufacturer warranty**
- **10 year workmanship warranty**

Total: $19,899 (replace skylight with metal for an additional $3,000)

MEMORANDUM

To: Mayor and Board of Aldermen

From: Tally Berry, Code Enforcement Manager
Community Development Department

Date: January 7, 2025

Re: Property Adjudication

I recommend that the Mayor and Board of Aldermen adjudicate the cost of cleaning the following property pursuant to State Statute 21-19-11:

LOT 11 CARR MEADOW DR.

This property was entered after the required notice and cleaned by the City of Ridgeland Public Works Department and Community Development Department personnel on 12-4-2024. I have attached an Invoice detailing the cost for the work performed at the property. Thank you for your consideration of this matter. Please contact me if you have any questions.

RESOLUTION OF THE MAYOR AND BOARD OF ALDERMEN OF THE CITY OF RIDGELAND, MISISSIPPI SETTING AN ASSESSMENT AGAINST LOTT 11 CARR MEADOW DR., RIDGELAND, MISSISSIPPI PURSUANT TO MISS. CODE ANN. §21-19-11

Whereas, on November 19,2024, the Mayor and Board of Aldermen authorized the Department of Community Development of the City of Ridgeland, Mississippi to clean the above referenced property, pursuant to the provisions of Miss. Code Ann. §21-19-11; and,

Whereas, on November 7, 2024, the Mayor and Board of Aldermen did adjudicate that the actual cost of cleaning the property was $617.97 and found that said amount should be assessed as a lien against the property and enrolled in the office of the Tax Collector of Madison County as other judgments are enrolled.

Now therefore it is resolved by the Mayor and the Board of Aldermen of the City of Ridgeland, Mississippi that pursuant to Miss. Code Ann. §21-19-11, the actual costs of $367.97 plus the amount of statutory penalty, $250.00, for a total amount of $617.97 should be assessed as a lien against Revival Custom Homes LLC, P.O. Box 1666 Ridgeland, MS. 39158 being Tax Parcel No. 072D-19A-081/00.00.

Further it is resolved that this Resolution should be recorded in the office of the Tax Collector of Madison County as a judgment against Revival Custom Homes LLC and lot 11 on Carr Meadow DR Ridgeland, MS. 39157.

So resolved this the eighteenth day of October, 2016.

CITY OF RIDGELAND, MISSISSIPPI

By:_____
Mayor Gene F. McGee

Attest:

_____
Paula Tierce, City Clerk

Invoice

City of Ridgeland

Billing Statement
Please remit to :
The City of Ridgeland
P.O. Box 217
Ridgeland, MS 39157

Property Address: Lot 11 Carr Meadow
Cleaning Date: 12-4-2024
Time: 1:30 p.m.- 2:30 p.m.

Labor		**Rate**	**Count**	**Hours**	**Flat Fee**		**Total**
Joseph Mills		$ 22.91	1	1			$ 22.91
James Chandler		$ 22.91	1	1			$ 22.91
Quincey Ousley		$ 19.42	1	1			$ 19.42
Tally Berry		$ 37.73	1	1			$ 37.73
Sub Total							**$ 102.97**
Equipment		**Rate**	**Count**	**Hours**	**Flat Fee**		**Total**
John Deere tractor		$ 35.00	1	1			$ 35.00
Bush hog		$ 35.00	1	1			$ 35.00
Weed eater		$ 10.00	2	1			$ 20.00
Blower		$ 10.00	1	1			$ 10.00
Flatbed truck		$ 15.00	1	1			$ 15.00
Sub Total							**$ 115.00**
Other		**Rate**	**Count**	**Hours**	**Flat Fee**		**Total**
Legal					$ 150.00		$ 150.00
Sub Total							**$ 150.00**

TOTALS

Total	$ 367.97
Statutory Penalty	$ 250.00
GRAND TOTAL	**$ 617.97**

SHIRLEY'S PARK

SITUATED IN THE SW¼ OF THE SE¼ OF SECTION 36, T7N–R1E,
CITY OF RIDGELAND, MADISON COUNTY, MISSISSIPPI

N

0' 60' 120'
Scale 1" = 60'

Class "B" Survey
Bearings and Distances Based on and Referenced to the MS State Plane Coordinate System Grid North (NAD 83 - West Zone) as Derived From RTK GPS Observations Using Earl Dudley, LLC's Continuously Reference Network.

Convergence Angle = +0°05'59.44"
Combined Scale Factor = 0.099994227
Computed at N = 1055534.5920, E=2354171.8960

Our Job No. M-3033-Final Plat
Date of Survey: October 3, 2022
Date of Plat: December 16, 2024
Scale: 1"=60'

- Iron Pin (1/2"x18" Iron Rebar)
- Easement Boundary
- Building Setback Line
- Access Easement
- Water and Sewer Easement
- Monument Sign Easement
- Shared Parking Area to Benefit Lot 1
- Shared Parking Area to Benefit Lot 2
- Pylon Sign Easement

RONALD C. McMASTER, JR.
LICENSED PROFESSIONAL ENGINEER AND SURVEYOR
P.E. 19185
P.S. 3051
STATE OF MISSISSIPPI

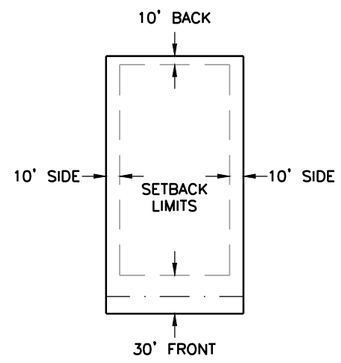

TYPICAL LOT DETAIL
N.T.S.

VICINITY MAP
N.T.S.

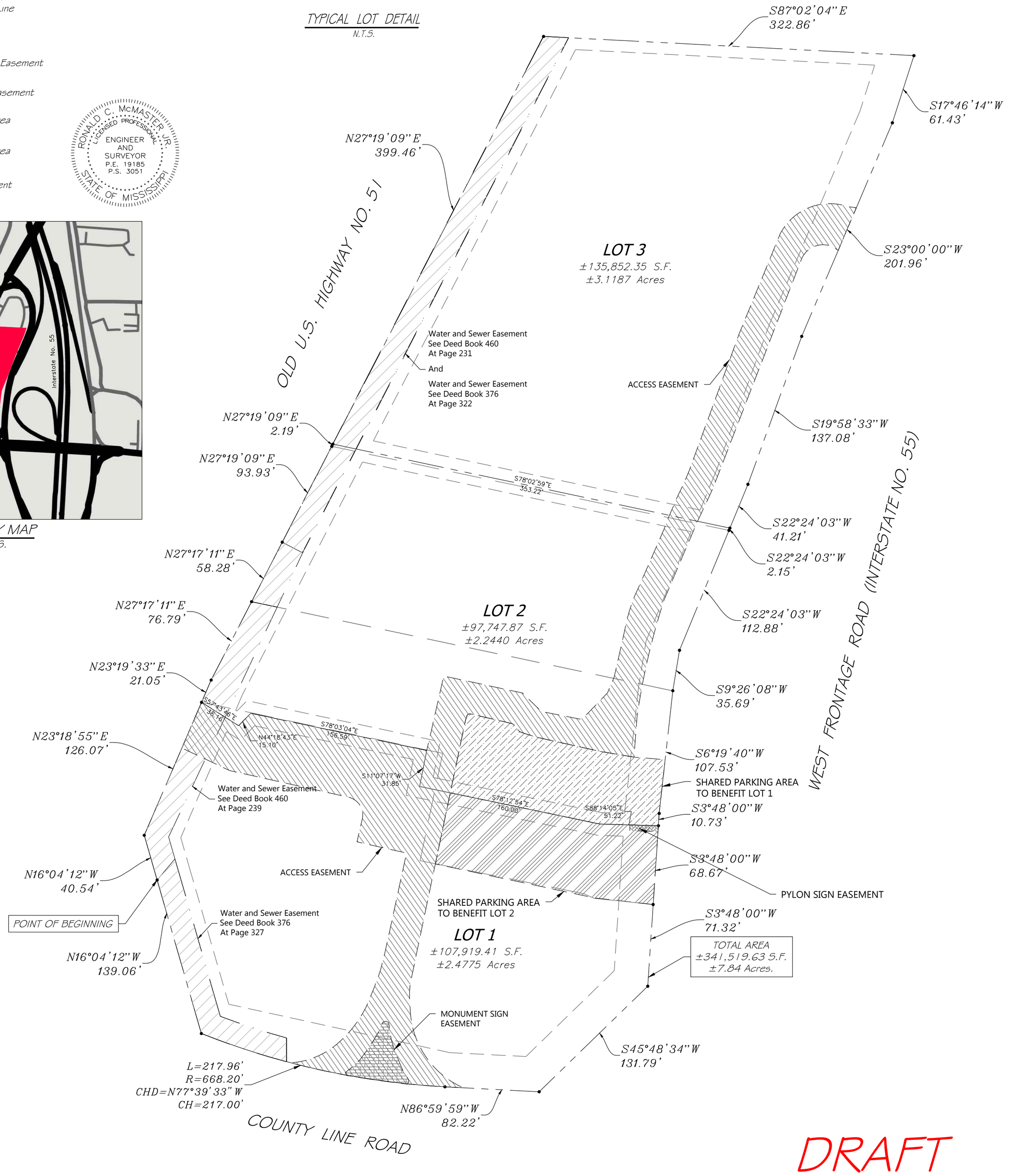

DRAFT

NOTES:

1. This is to certify that this property is situated in Zone "X"–Other Areas, which is defined as "Areas determined to be outside the 0.2% annual chance floodplain", according to FIRM Map Number 28089C0569F, map revised March 17, 2010.
2. Iron pins at lot corners as shown on this plat. Field work meets or exceeds the requirements for a Class "B" survey.
3. No building, fences, or other obstructions may be constructed within any drainage or utility easement shown hereon.

McMASTER & ASSOCIATES, INC.
CIVIL ENGINEERS & LAND SURVEYORS
212 WATERFORD SQUARE
SUITE 300
MADISON, MS 39110
601.605.1090

SHIRLEY'S PARK

SITUATED IN THE SW¼ OF THE SE¼ OF SECTION 36, T7N–R1E,
CITY OF RIDGELAND, MADISON COUNTY, MISSISSIPPI

SURVEYOR'S CERTIFICATE OF COMPLIANCE
STATE OF MISSISSIPPI
COUNTY OF MADISON

I, Ronald C. McMaster, Jr., Professional Engineer and Surveyor, do hereby certify that the monuments and markers shown hereon are in place on the ground and the plat and plan shown and described hereon are a true and correct representation of a survey to the accuracy designated in the subdivision regulations for Madison County, Mississippi.

Witness my signature this the_____day of_____, 2025.

_____
Ronald C. McMaster, Jr., Professional Engineer and Surveyor

CERTIFICATE OF COMPARISON
STATE OF MISSISSIPPI
COUNTY OF MADISON

We, Ronny Lott, Chancery Clerk and Ronald C. McMaster, Jr., Professional Engineer and Surveyor, do hereby certify that we have carefully compared this plat of SHIRLEY'S PARK, with the original thereof, as made by Ronald C. McMaster, Jr., Professional Engineer and Surveyor, and find it to be a true and correct copy of said map or plat.

Given under my hand and seal of office this the _____ day of _____ , 2025.

_____ _____
Ronald C. McMaster, Jr., P.E., P.S. Ronny Lott, Chancery Clerk

By:_____, D.C.

ACKNOWLEDGMENT
STATE OF MISSISSIPPI
COUNTY OF MADISON

Personally appeared before me, the undersigned officer in and for the jurisdiction aforesaid, the within named Mark A. Kohl, President of Drury Development Corporation, a Missouri Corporation, who acknowledged to me that he signed and delivered this plat and the certificates thereon, as his own act and deed, and Ronald C. McMaster, Jr., Professional Engineer and Surveyor, who acknowledged to me that he signed and delivered this plat and the certificates thereon as his own act and deed, on the day and year herein mentioned.

Given under my hand and seal of office this the _____ day of _____ , 2025.

By: _____ _____ D.C.
Ronny Lott, Chancery Clerk

FILING AND RECORDATION
STATE OF MISSISSIPPI
COUNTY OF MADISON

I, Ronny Lott, Chancery Clerk in and for said County and State, do hereby certify that the final plat of was filed for record in my office on this the _____ day of _____ , 2025, and was duly recorded in Plat Cabinet _____ at Slide _____ of the records of maps and plats of land in Madison County, Mississippi.

Given under my hand and seal of office this the _____ day of _____ , 2025.

By: _____ _____ D.C.
Ronny Lott, Chancery Clerk

CITY PLANNING AND ENGINEER'S APPROVAL
STATE OF MISSISSIPPI
COUNTY OF MADISON

We have examined this plat and find that it conforms to all conditions set forth on the preliminary plat as approved by the Mayor and Board of Aldermen and thus recommend final approval.

_____ _____
Public Works Director Chairman

_____
City Planning and Zoning Board

CITY APPROVAL CERTIFICATE
STATE OF MISSISSIPPI
COUNTY OF MADISON

I hereby certify that this is a true copy and that this plat was approved by the Mayor and Board of Aldermen in session on the_____day of_____, 2025.

_____
ATTEST:

_____ _____
City Clerk
City of Ridgeland

Mayor
City of Ridgeland

CERTIFICATE AND DEDICATION OF OWNER
STATE OF MISSISSIPPI
COUNTY OF MADISON

I, Mark A. Kohl, President of Drury Development Corporation, a Missouri Corporation, do hereby certify that the aforementioned is the owner of the land described in the foregoing certificate of Ronald C. McMaster, Jr., Professional Engineer and Surveyor, and that as President of said Drury Development Corporation and owner, have caused the same to be subdivided and platted as shown hereon, and hereby adopt this plat of said subdivision as the free act and deed of said corporation and owner and have designated the same as SHIRLEY'S PARK.

All utilities, utility easements, and other easements are as designated and defined hereon.

Witness my signature this the _____ day of _____, 2025.

Drury Development Corporation
A Missouri Corporation

By: _____
Mark A. Kohl, President

PROFESSIONAL LAND SURVEYOR'S CERTIFICATE
STATE OF MISSISSIPPI
COUNTY OF MADISON

I, Ronald C. McMaster, Jr., Professional Engineer and Surveyor, do hereby certify that at the request of Drury Development Corporation, the owner, have subdivided and platted the following described land, as follows, to–wit:

A parcel or tract of land, containing 7.84 acres (341,519.63 sq. ft.), more or less, lying and being situated in the SE 1/4 of the of Section 36, T7N–R1E, Madison County, Mississippi, being a part of the Drury Development Corporation property as described in Deed Book 460 at Page 581, Deed Book 1898 Page 2 and Deed Book 460 Page 576 of the Records of the Office of the Chancery Clerk of said Madison County, at Canton, Mississippi, and being more particularly described as follows:

COMMENCING at the SE corner of said Section 36, T7N–R1E, Madison County, Mississippi; run thence

North for a distance of 367.41 feet; thence

West for a distance of 2359.73 feet to a one–half inch iron rebar lying on the Westerly boundary of the above referenced Drury Development Corporation (Deed Book 460 Page 576) and POINT OF BEGINNING of the herein described property; thence

North 16 degrees 04 minutes 12 seconds West along the Westerly boundary of said Drury Development Corporation property (Deed Book 460 Page 576) for a distance of 40.54 feet to a one–half inch iron rebar; thence

North 23 degrees 18 minutes 55 seconds East along the Westerly boundary of said Drury Development Corporation property (Deed Book 460 Page 576) for a distance of 126.07 feet to a one–half inch iron rebar lying at the SW corner of the above referenced Drury Development Corporation property (Deed Book 1898 Page 2); thence

Leaving the Westerly boundary of said Drury Development Corporation property (Deed Book 460 Page 576), run along the Westerly boundary of said Drury Development Corporation property (Deed Book 1898 Page 2) to one–half inch iron rebars at each of the following calls;

North 23 degrees 19 minutes 33 seconds East for a distance of 21.05 feet; thence
North 27 degrees 17 minutes 11 seconds East for a distance of 76.79 feet; thence
North 27 degrees 17 minutes 11 seconds East for a distance of 58.28 feet; thence

North 27 degrees 19 minutes 09 seconds East for a distance of 93.93 feet to a one–half inch iron rebar lying at the NW corner of said Drury Development Corporation property (Deed Book 1898 Page 2), said point also lying on the Westerly boundary of the above referenced Drury Development Corporation property (Deed Book 460 Page 581); thence

Continue North 27 degrees 19 minutes 09 seconds East along the Westerly boundary of said Drury Development Corporation property (Deed Book 460 Page 581) for a distance of 2.19 feet; thence

Continue North 27 degrees 19 minutes 09 seconds East along the Westerly boundary of said Drury Development Corporation property (Deed Book 460 Page 581) for a distance of 399.46 feet to a one–half inch iron rebar lying at the NW corner, thereof; thence

South 87 degrees 02 minutes 04 seconds East along the Northerly boundary of said Drury Development Corporation property (Deed Book 460 Page 581) for a distance of 322.86 feet to a one–half inch iron rebar lying at the NE corner, thereof; thence

Along the Easterly boundary of said Drury Development Corporation property (Deed Book 460 Page 581) to one–half inch iron rebars at each of the following calls;

South 17 degrees 46 minutes 14 seconds West for a distance of 61.43 feet; thence
South 23 degrees 00 minutes 00 seconds West for a distance of 201.96 feet; thence
South 19 degrees 58 minutes 33 seconds West for a distance of 137.08 feet; thence
South 22 degrees 24 minutes 03 seconds West for a distance of 41.21 feet; thence

Continue South 22 degrees 24 minutes 03 seconds West for a distance of 2.15 feet to a one–half inch iron rebar lying at the NE corner of the above referenced Drury Development Corporation property (Deed Book 1898 Page 2); thence

Leaving the Easterly boundary of said Drury Development Corporation property (Deed Book 460 Page 581), run along the Easterly boundary of said Drury Development Corporation property (Deed Book 1898 Page 2) to one–half inch iron rebars at each of the following calls;

Continue South 22 degrees 24 minutes 03 seconds West for a distance of 112.88 feet; thence
South 09 degrees 26 minutes 08 seconds West for a distance of 35.69 feet; thence
South 06 degrees 19 minutes 40 seconds West for a distance of 107.53 feet; thence
South 03 degrees 48 minutes 00 seconds West for a distance of 10.73 feet; thence

Continue South 03 degrees 48 minutes 00 seconds West for a distance of 68.67 feet to a one–half inch iron rebar lying at the SE corner of said Drury Development Corporation property (Deed Book 1898 Page 2), said point also lying on the Easterly boundary of the above referenced Drury Development Corporation property (Deed Book 460 Page 576); thence

Along the Easterly, Southerly and Westerly boundary of said Drury Development Corporation property (Deed Book 460 Page 576) to one–half inch iron rebars at each of the following calls;

South 03 degrees 48 minutes 00 seconds West for a distance of 71.32 feet; thence
South 45 degrees 48 minutes 34 seconds West for a distance of 131.79 feet; thence
North 86 degrees 59 minutes 59 seconds West for a distance of 82.22 feet; thence

217.96 feet along the arc of a 668.20 foot radius curve to the right, said arc having a 217.00 foot chord which bears North 77 degrees 39 minutes 33 seconds West; thence

North 16 degrees 04 minutes 12 seconds West for a distance of 139.06 feet to the POINT OF BEGINNING of the above described parcel or tract of land.

Witness my signature, this the _____ day of _____ , 2025.

_____
Ronald C. McMaster, Jr., Professional Surveyor,
Mississippi P.S. No. 3051

RONALD C. McMASTER, JR.
LICENSED PROFESSIONAL
ENGINEER AND SURVEYOR
P.E. 19185
P.S. 3051
STATE OF MISSISSIPPI

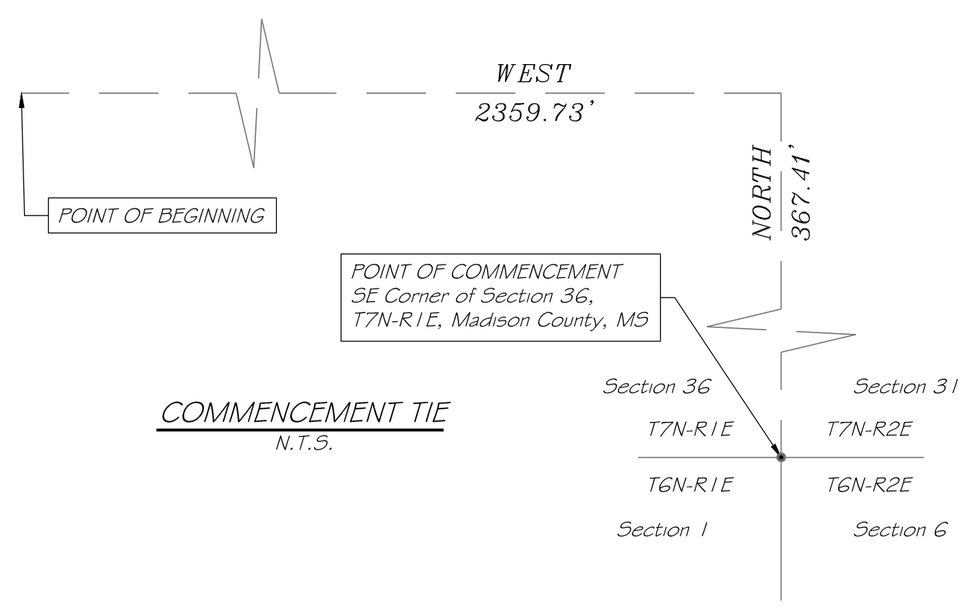

COMMENCEMENT TIE
N.T.S.

DRAFT

McMASTER & ASSOCIATES, INC.
CIVIL ENGINEERS & LAND SURVEYORS
212 WATERFORD SQUARE
SUITE 300
MADISON, MS 39110
601.605.1090

After recording, return to:
Julie Freed, Associate General Counsel
Drury Development Corporation
13075 Manchester Road, Suite 200
St. Louis, Missouri 63131

(Space Above Line Reserved for Recorder's Use)

1.	**Title of Document:**	Declaration of Easements, Protective Covenants, Conditions and Restrictions
2.	**Date of Document:**	_____, 2024
3.	**Grantor:**	Drury Development Corporation
4.	**Grantee:**	Drury Development Corporation
5.	**Statutory Mailing Addresses:**	13075 Manchester Road, Suite 200 St. Louis, MO 63131 Attn: Jacqueline Pollvogt
6.	**Legal Descriptions:**	See Exhibits B, C and D annexed to this document
7.	**Reference to Book and Page:**	

DECLARATION OF EASEMENTS, PROTECTIVE COVENANTS, CONDITIONS AND RESTRICTIONS

THIS DECLARATION OF EASEMENTS, PROTECTIVE COVENANTS, CONDITIONS AND RESTRICTIONS (hereinafter referred to as the "**Declaration**") is made as of the ____ day of _____, 2024 by **Drury Development Corporation**, a Missouri corporation ("**Declarant**").

RECITALS

A. Declarant is the owner of that certain real property situated in Madison County, Mississippi, depicted on **Exhibit A** attached hereto and made a part hereof (the "**Property**"), and as shown on the _____ filed for record in Madison County, Mississippi in _____ on _____, 2024 (the "**Plat**").

B. The Property has been re-platted and is now comprised of three (3) lots, as shown on the Plat and identified thereon as Lot 1, consisting of approximately _____ acres of land improved with a restaurant Building and related improvements, and more particularly described on **Exhibit B** attached hereto (hereinafter referred to as the "**Restaurant Parcel**" or "**Lot 1**"), Lot 2, consisting of approximately _____ acres of land improved with a hotel and related improvements, and more particularly described on **Exhibit C** attached hereto (hereinafter referred to as the "**Hotel Parcel**" or "**Lot 2**"), and Lot 3, consisting of approximately _____ acres of unimproved land, and more particularly described on **Exhibit D** attached hereto (hereinafter referred to as the **"Vacant Parcel"** or **"Lot 3"**). (Lots 1, 2 and 3 are referred to herein individually as a "**Lot**" and collectively as the "**Lots**").

C. Declarant intends by this Declaration to impose upon the Property covenants, conditions and restrictions and to create easements to establish a general plan for the improvement, development and use of the Property. A current site plan of the Property is generally depicted on **Exhibit E** attached hereto (the "**Site Plan**").

D. Declarant desires and intends that the Property shall be subject to the covenants, conditions, restrictions and easements contained in this Declaration, and which shall be improved, held, used, occupied, leased, sold, or conveyed subject to this Declaration.

E. Irrespective of Declarant's ownership of any portion of the Property, it is the intent and express declaration of Declarant that the covenants, conditions, restrictions, and easements set forth herein shall not merge into the ownership interest of Declarant but, to the contrary, shall survive, continue, and run with the land and shall inure to and pass with the Property, and will inure to the benefit of and bind all of Declarant's successors in interest.

NOW, THEREFORE, in consideration of the premises, the covenants and agreements hereinafter set forth, Declarant declares and grants, as follows:

ARTICLE I
DEFINITIONS

As used in this Declaration, the following terms have the following meanings:

Section 1.1 **Building or Buildings** means any enclosed structure or structures placed, constructed or located on a Lot, which for the purpose of this Declaration shall include any appurtenant canopies, supports, loading docks, truck ramps and other outward extensions.

Section 1.2 **Condemnation** means (a) the permanent taking of all or any part of the Lots or the possession thereof under the power of eminent domain or (b) the voluntary sale of all or any part of the Lots to any person having the power of eminent domain, provided that such portion of the Lots is then under the actual and imminent threat of eminent domain.

Section 1.3 **Driveways** means the drive aisles and access driveways, constructed and maintained (or to be constructed and maintained) for ingress and egress by automobiles and other passenger vehicles within and between the Lots connecting the Lots with public roadways and related driveway improvements, paving, curbing, landscaping and lighting, as they may exist from time to time. Initially, the "Driveways" shall be the areas shown on the Site Plan as being intended for any of the purposes described in this Section 1.3.

Section 1.4 **Governmental Agencies** means all governmental agencies, authorities and subdivisions having jurisdiction over the development and use of the Lots.

Section 1.5 **Governmental Requirement** means the laws, ordinances, codes, rules and regulations of all Governmental Agencies applicable to the development, construction and use of the Lots.

Section 1.6 **Occupant** means any Person entitled by ownership, license, easement or lease to use and occupy any portion of the Lots, or one or more of them, as the context may require.

Section 1.7 **Owner** means Declarant and any Person who takes title to any Lot or portion thereof. Each Owner shall be liable for the performance of all covenants, obligations and undertakings herein set forth with respect to the Lot owned by it which accrue during the period of such ownership, and such liability shall continue with respect to any portion transferred until the notice of transfer set forth below is given, at which time the transferring Owner shall be released from the obligations of this Declaration arising subsequent to the effective date on the transfer notice. An Owner transferring its Lot (other than Declarant's first transfer of title to an Owner other than Declarant or its affiliate) shall give notice to the other Owners of such transfer and shall include therein at least the following information:

(i) the name and address of the new Owner; and

(ii) the effective date of the transfer; and

(iii) a copy of the legal description of the Lot transferred.

If a Lot is owned by more than one Owner, the Person or Persons holding more than fifty percent (50%) of the ownership interest in the Lot shall designate one of their number to represent all Owners of the Lot and such designated Person shall be deemed the Owner for such Lot for purpose of this Declaration.

Section 1.8 **Parking Area**. "Parking Area" means all areas in the Lots which are set apart or used from time to time for automobile and other vehicle traffic and parking, including, without limitation, traffic aisles and curbs adjacent thereto, vehicle parking stalls, pedestrian walkways, grade separations, landscaped areas, lighting standards and traffic and directional signals and all amenities relating thereto. Initially, the "Parking Area" shall be the areas shown on the Site Plan as being intended for any of the purposes described in this Section 1.8.

Section 1.9 **Permittees** means all Occupants and their respective officers, directors, employees, agents, partners, contractors, customers, visitors, invitees, licensees and concessionaires.

Section 1.10 **Person** means individuals, partnerships, associations, corporations and any other form of business organization, or one or more of them or combination of them.

Section 1.11 **Utility Facilities** means all utility lines and systems serving any of the Lots, including but not limited to, sanitary sewer systems, storm sewer systems, water systems, fire protection installations, natural gas systems (if any), electrical power systems, and telephone and communication systems. "**Common Utility Facilities**" means those Utility Facilities which are installed or provide the applicable service to more than one Lot. "**Separate Utility Facilities**" means those Utility Facilities which are installed to provide the applicable service to only one Lot. For the purpose of this Declaration, the portion of a Utility Facility extending between a Common Utility Facility and a Building shall be considered a Separate Utility Facility.

ARTICLE II
EASEMENTS

Section 2.1 **Definitions and Documentation**. For purposes of this Article, the following will apply:

(a) All rights, privileges and easements granted herein are non-exclusive and in common with the party granting such rights, privileges and easements (the "**grantor**") and, unless provided otherwise, are irrevocable and for the benefit of all of the Owners of their respective Lots (each a "**grantee**" and collectively, "**grantees**").

(b) All easements granted hereunder shall exist by virtue of this Declaration, without the necessity of confirmation by any other document. Likewise, upon the termination of any easement (in whole or in part) or its release in respect of all or any part of any Lot, the same shall be deemed to have been terminated or released without the necessity of confirmation by any other document. However, upon the request of any Owner, the other Owners who benefit from or are burdened by the easement at issue will sign and acknowledge a document memorializing the existence (including the location and any conditions) or the termination (in whole or in part) or the release (in whole or in part), as the case may be, of any easement, if the form and substance of the document is reasonably acceptable to such Owners.

Section 2.2 **Easements for Ingress and Egress**.

(a) Declarant hereby grants and conveys to the Owners of each of the Lots, for their use and for the use of their respective Permittees during the term of this Declaration, in common with others entitled to use the same, a perpetual non-exclusive easement for (i) the passage of vehicles over and across the Parking Areas and Driveways of the grantor's Lot, as the same may from time to time be constructed and maintained for such use, and (ii) for the passage and accommodation of pedestrians over and across the Parking Areas, Driveways and sidewalk areas of the grantor's Lot, as the same may from time to time be constructed and maintained for such use (the "**General Access Easements**"). Notwithstanding anything to the contrary contained in this Declaration or shown on the Site Plan, and except as otherwise described in Section 2.2(b) below, each Owner reserves the right to modify, relocate, or reconfigure the Parking Areas, Driveways, Building areas, curb cuts and other improvements on its Lot from time to time in its sole discretion; provided that the Owner of the Restaurant Parcel shall at all times maintain at least one (1) curb cut along County Line Road and one (1) curb cut along US Highway 51 to maintain connectivity from each of the Lots to such public roadways, and the Owner of the Vacant Parcel shall maintain at least one (1) curb cut along West Frontage Road to maintain connectivity from each of the Lots to such public roadway.

(b) All Owners hereby reserve the right to eject or cause to be ejected from such portions of its Lot any Persons not authorized, empowered or privileged to use the same. In addition, all Owners reserve the right to close off any portion of its Lot (other than Common Utility Facilities) for such reasonable periods of time as may be legally necessary to prevent the acquisition of prescriptive rights by anyone; provided, however, before closing off any part of its Lot as provided above, such Owner shall give notice to the other Owners of its intention to do so and shall coordinate its closing with the activities of the other Owners so that no unreasonable interference with the passage or parking of vehicles or passage of pedestrians occurs.

(c) The opening(s) and access point(s) between the Lots (and between the Lots and the public roads) for use of the Driveways are hereinafter called the "**Access Openings.**" Except as specifically set forth in Section 2.2 (b) above, the Access Openings shall in no event be blocked, closed, or removed unless prior written consent has been granted by the Owners of all the Lots. There shall be maintained between the Access Openings a smooth and level grade transition to allow the use of the Driveways for pedestrian and vehicular ingress and egress as set forth above. Notwithstanding the foregoing and subject to this Article II and Articles III and IV below, each Owner reserves the right, from time to time, without obtaining the consent or approval of the other Owners, to make any changes, modifications or alterations in or on its own Lot, provided that the accessibility of the Driveways, the General Access Easements and the Parking Easement (as defined in Section 2.3 below) are not unreasonably restricted thereby, and further provided that the Owner of the Restaurant Parcel shall at all times maintain at least one (1) curb cut along County Line Road and one (1) curb cut along US Highway 51 to maintain connectivity from each of the Lots to such public roadways, and the Owner of the Vacant Parcel shall maintain at least one (1) curb cut along West Frontage Road to maintain connectivity from each of the Lots to such public roadway. The granting of the Easements described herein is not intended and shall not be construed as a dedication of the Easements for public use, and the Owners shall take appropriate actions to avoid a public dedication thereof.

(d) Notwithstanding any other provision of this Declaration, the easements granted under Section 2.2 (a) shall be perpetual easements and shall only be terminated with the consent of all of the Owners owning the Lots.

Section 2.3 **Easement for Parking**. Declarant hereby reserves and each successive Owner of the Restaurant Parcel and the Hotel Parcel grant and convey to one another, for their use and for the use of their respective Permittees during the term of this Declaration, in common with others entitled to use the same, a perpetual non-exclusive easement for the parking of vehicles on and over the Parking Areas by the grantee's customers (but excluding the grantee's employees), subject to reasonable rules and regulations agreed to by the Owner of the Restaurant Parcel and the Hotel Parcel (the "**Parking Easement**"). Notwithstanding the foregoing, the Parking Easement granted herein shall be limited such that in no event shall the use by either Owner or their respective Permittees of a Parking Area owned by the other Owner, for the parking of vehicles, exceed thirty (30) parking spaces (the "**Cross Parking Limit**"), provided that an occasional incident of exceeding the Cross Parking Limit ("occasional" being defined as not occurring on a regular or continuing basis so as to interfere with the business of the Owner of the encumbered Lot, as determined by such Owner in its sole discretion) shall not be deemed a violation of the Cross Parking Limit. In the event of a continued violation of the Cross Parking Limit, the Owner of the Restaurant Parcel and the Hotel Parcel shall cooperate in good faith to accommodate the reasonable parking needs of the other Owner and its Permittees. Each Owner of the Restaurant Parcel and the Hotel Parcel shall have the right to reasonably designate (taking into account the reasonable parking needs of the other Owner and its Permittees) the thirty (30) parking spaces on its Lot that shall be subject to the Parking Easement set forth herein and to install signage on its Lot designating the remaining parking spaces on such Owner's Lot as exclusive to its Lot. Notwithstanding the foregoing, each Owner of the Restaurant Parcel and the Hotel Parcel shall maintain the right, in its sole discretion, to modify,

relocate, remove or reconfigure the Parking Areas on its Lot and to reasonably re-designate (taking into account the reasonable parking needs of the other Owner and its Permittees) the thirty (30) parking spaces on its Lot that shall be subject to the Parking Easement from time to time. Notwithstanding any other provision of this Declaration, the Parking Easement granted under this Section 2.3 shall be perpetual and shall only be terminated with the consent of the Owner of the Hotel Parcel and the Owner of the Restaurant Parcel.

Section 2.4 **Storm Water Drainage**. Declarant hereby grants and conveys to the Owner of each of the Lots for their use and for the use of the Occupants of each Lot during the term of this Declaration, in common with others entitled to use the same, the perpetual and irrevocable right and easement to discharge surface storm drainage and runoff from the grantee's Lot over, upon and across the grantor's Lot and through the stormwater management facilities for the Lots, upon the following terms and conditions:

(a) The grade and the surface water drainage system for the Lots shall be constructed in conformance with the engineering plans approved by Governmental Agencies.

(b) Each Owner shall be permitted to alter the surface of its Lot or the drainage system constructed on its Lot; however, alterations must account for any existing stormwater runoff from the adjacent Lot. If such alteration would cause the design capacity of any sewer or drainage system serving the Lots (giving consideration to the Buildings and, if applicable, other impervious structures contemplated to be constructed on the Lots) to be exceeded, the cost of modifying any sewer or drainage system shall be the sole responsibility of the Owner of the Lot proposing the alterations. No alterations shall be permitted without the express written consent of the Owner of the impacted Lot if alterations would materially increase the volume or rate of flow of surface water onto another Lot either in the aggregate or by directing the flow of surface water to a limited area, or would adversely affect ingress or egress to or from any Lot or would otherwise adversely affect another Lot.

Section 2.5 **Easements for Utility Facilities**.

(a) Each Owner hereby grants and conveys to each other Owner for their use and for the use of the Occupants of each Lot during the term of this Declaration, in common with others entitled to use the same, non-exclusive perpetual easements in, to, under, along and across the grantor's Lot as and where necessary for the installation, operation, flow, passage, use, maintenance, connection, repair, relocation, and removal of utility facilities serving the grantee's property, subject to the terms and conditions of this Section 2.5.

(b) Upon completion of construction of any Utility Facilities, the Owner or Occupant, as the case may be, shall prepare and deliver to the other Owners an "as built" plan of such Utility Facility, in recordable form, so as to appropriately identify the type and location of the Common Utility Facilities and Separate Utility Facilities, as the case may be. The grantee of any easement for a Separate Utility Facility agrees to defend, protect, indemnify and hold harmless the grantor from and against all claims or demands, including any action or proceeding brought thereof, and all costs, losses, expenses and liabilities of any kind relating thereof, including reasonable attorneys' fees and cost of suit, arising out of or resulting from the exercise of the right to install, maintain and operate a Separate Utility Facility on the grantor's Lot.

(c) All Utility Facilities shall be underground except:

(i) ground mounted electrical transformers;

(ii) above-ground surface water collection, retention and distribution facilities;

(iii) as may be necessary during periods of construction, reconstruction, repair, or temporary service;

(iv) as may be required by Governmental Agencies;

(v) as may be required by the provider of such service; and

(vi) fire hydrants.

Notwithstanding the foregoing, each Owner agrees to use reasonable efforts to locate any permitted above-ground Utility Facilities outside of the primary entrance ways for the Property and screen such above-ground Utility Facilities from public view.

(d) At least ten (10) days prior to any installation, maintenance, connection, repair, relocation or removal of Utility Facilities located on another Owner's Lot pursuant to the easement granted herein (except in an emergency, when the work may be initiated with reasonable written notice), the grantee shall first provide the grantor with a written statement describing the need for such work, shall identify the proposed location of the Utility Facilities the nature of the service to be provided, the anticipated commencement and completion dates for the work, the identity of the contractor performing such work and insurance certificates evidencing commercial general liability insurance with respect to injury to person and damage to property in an amount not less than $2,000,000.00 and naming the grantor and its mortgagee, if any, as an additional insured.

(e) The initial location and nature of any Utility Facilities shall be subject to the prior written approval of the Owner whose Lot is to be burdened thereby, such approval not to be unreasonably withheld or delayed. The easement area shall be within ten (10') of the perimeter of the burdened Lot and shall be no wider than necessary to reasonably satisfy the requirements of a private or public utility, but in no event narrower than five feet (5') on each side of the centerline. Upon request, the grantee shall provide to the grantor a copy of an as-built survey showing the location of such Utility Facilities.

(f) Except as otherwise agreed to by the grantor and the grantee, any Owner or Occupant installing Separate Utility Facilities pursuant to the provisions of this subparagraph shall pay all costs and expenses with respect thereto and shall cause all work in connection therewith (including general clean up and proper surface or subsurface restoration) to be completed as quickly as possible and in a manner so as to minimize interference with the use of the Lot. The grantee of any Separate Utility Facility shall indemnify the grantor from all claims arising out of or resulting from the installation, maintenance and operation of the Separate Utility Facility.

(g) The grantor of an easement granted herein shall have the right to relocate a Utility Facility located within such grantor's Lot upon ten (10) days' prior written notice, provided that such relocation:

(i) shall not interfere with or diminish the utility service to the grantee during the grantee's business hours; and if an electrical line/computer line is being relocated, then the grantor and grantee shall coordinate such interruption to eliminate any detrimental effects;

(ii) shall not reduce or unreasonably impair the usefulness or function of such Utility Facility;

(iii) shall be performed without cost or expense to grantee;

(iv) shall be completed using materials and design standards which equal or exceed those originally used; and

(v) shall have been approved by the provider of such service and the appropriate Governmental Agencies having jurisdiction thereover.

Documentation of the relocated easement area, including the furnishing of an "as-built" survey, shall be performed at the grantor's expense and shall be accomplished as soon as possible following completion of such relocation.

(h) Each Owner or Occupant shall maintain and repair, or cause to be maintained and repaired, in a good state of repair and safe condition, all Separate Utility Facilities used by such Owner or Occupant regardless of where located unless the provider of the utility service or a public or quasi-public authority has agreed to maintain such Utility Facilities. Any maintenance, replacement or repair of non-dedicated Utility Facilities located on another Owner's Lot shall be performed only after ten (10) days' notice to the grantor (except in an emergency the work may be initiated with reasonable notice), after normal business hours whenever possible, and in such a manner as to cause as little disturbance in the use of the grantor's Lot as is practicable under the circumstances. Any Owner or Occupant performing or causing to be performed maintenance or repair work shall promptly pay all costs and expenses associated therewith, diligently complete such work as quickly as possible and promptly clean the area and restore the affected portion of the Lot to a condition equal to or better than the condition which existed prior to the commencement of such work.

(i) Except as otherwise provided herein, Common Utility Facilities shall be maintained, repaired and/or replaced by the Owner on whose Lot the Common Utility Facilities are located in accordance with the standards set forth in Section 2.5(h) above.

(j) Except as otherwise provided herein, the rights and easements herein contained shall be perpetual and shall run with the land and shall inure to the benefit of and be binding upon each of the Owners and on all parties having any right, title or interest in the Lot or any part thereof, their heirs, successors and assigns.

Section 2.6 **Pylon Sign Easement and Sight Line Easement**. Declarant hereby reserves and each successive Owner of the Restaurant Parcel hereby grants, gives and conveys to the Owner of the Hotel Parcel for the benefit of the Hotel Parcel a non-exclusive right, privilege and easement to use that certain portion of Restaurant Parcel generally depicted on the Site Plan attached hereto as **Exhibit E** and incorporated herein by this reference (the "**Pylon Sign Easement Area**") for the purposes of using, operating, maintaining, repairing, replacing, electrifying, lighting, removing and landscaping the existing pylon sign and related lighting and utilities which are constructed thereon (the "**Pylon Sign**"), and over, across, under and through such portion of the Restaurant Parcel as is reasonably necessary so as to allow reasonable access, ingress and egress by the Owner of Hotel Parcel and its respective agents, contractors, employees, or invitees, to and from the Pylon Sign Easement Area, from time to time, to effect the purposes of this Declaration including, without limitation, the right to connect the Pylon Sign to electricity from a reasonable utility source.

The Owner of the Restaurant Parcel agrees not to install or maintain any improvements or allow any impediment or obstruction to remain on the area generally depicted on the Site Plan attached hereto as **Exhibit E** and incorporated herein by reference (the "**Site Line Easement Area**") including, without limitation, buildings, structures, trees or other vegetation, that would interfere with or impede the sight-

line view from each of the following streets: County Line Road, West Frontage Road and US Highway 51 to the Pylon Sign.

The easement rights granted in this Section 2.6 are perpetual and may only be terminated upon the mutual agreement of the Owner of the Restaurant Parcel and the Owner of the Hotel Parcel. Upon termination of the easement rights contained in this Section 2.6, the Owner of Restaurant shall have the right to require the Owner of Hotel Parcel to execute and record a partial release document in form and substance reasonably acceptable to the Owner of the Restaurant Parcel.

The Owner of the Hotel Parcel shall cause the Pylon Sign (and related utilities and lighting) to be maintained, repaired, and replaced in good condition. All costs incurred in connection with such maintenance and repair, including, without limitation, the cost to maintain property insurance covering 100% of replacement cost in the event of damage or destruction, the cost of labor and materials, and utility costs ("**Sign Maintenance Costs**" for purposes of this Section) shall be paid by the Owner of the Hotel Parcel. All work performed by the Owner of the Hotel Parcel in the exercise of such easement rights with respect to the Pylon Sign shall be completed (and any damage to the Restaurant Parcel resulting from the exercise by the Owner of the Hotel Parcel of its easement rights set forth in this Section shall be promptly repaired) in a good and workmanlike manner, free of liens, and in compliance with any Governmental Requirements.

Section 2.7 **Monument Sign Easement**. Declarant hereby reserves and each successive Owner of the Restaurant Parcel hereby grants, gives and conveys to the Owners of the Hotel Parcel and the Vacant Parcel for the benefit of such Parcels a non-exclusive right, privilege and easement to use that certain portion of Restaurant Parcel generally depicted on the Site Plan attached hereto as **Exhibit E** and incorporated herein by reference (the "**Monument Sign Easement Area"**) for the purposes of using, operating, maintaining, repairing, replacing, electrifying, lighting and removing a double sided sign panel ("**Sign Panel**") on the existing shared monument sign (the "**Monument Sign**") and related lighting and utilities which are constructed thereon and over, across, under and through such portion of the Restaurant Parcel as is reasonably necessary so as to allow reasonable access, ingress and egress by the Owner of the Hotel Parcel and Vacant Parcel and their respective agents, contractors, employees, or invitees, to and from the Monument Sign Easement Area, from time to time, to effect the purposes of this Declaration. Each Owner's Sign Panel on the Monument Sign shall be in the location shown on **Exhibit F** attached hereto and incorporated by reference. In no event shall any Owner make any modifications to its Sign Panel which would negatively impact the rights of the other Owners' Sign Panels on the Monument Sign. The easement rights granted in this Section 2.7 shall be perpetual and may only be terminated upon the mutual agreement of all of the Owners to this Declaration. Upon termination of the easement rights contained in this Section 2.7, the Owner of the Restaurant Parcel shall have the right to require the Owner of the Hotel Parcel and the Vacant Parcel to execute and record a partial release document in form and substance reasonably acceptable to the Owner of the Restaurant Parcel.

The Owner of the Restaurant Parcel shall cause the Monument Sign (and related utilities, lighting and landscaping) to be maintained, repaired, and replaced in good condition, except that each Owner shall be responsible to maintain, repair and replace its own Sign Panel on the Monument Sign at such Owner's sole cost and expense. All costs incurred in connection with such maintenance, repair and replacement, including, without limitation, the cost to maintain property insurance covering 100% of replacement cost in the event of damage or destruction and the cost of labor and materials to maintain the structural integrity of the Monument Sign ("**Monument Sign Maintenance Costs**" for purposes of this Section) shall be shared among the respective Owners as follows: 50% to the Owner of the Hotel Parcel and 50% to the Owner of the Restaurant Parcel so long the Vacant Parcel remains undeveloped, and 25% to the Owner of the Hotel Parcel, 50% to the Owner of the Restaurant Parcel, and 25% to the Owner of the Vacant Parcel once the Owner of the Vacant Parcel maintains a Sign Panel on the Monument Sign. The

Owner of the Hotel Parcel and the Vacant Parcel (if and when applicable) shall pay to the Owner of Restaurant Parcel, within fifteen (15) business days after the receipt of an itemized invoice, its share of the Monument Sign Maintenance Costs.

Section 2.8 **Liens**. Each Owner or Occupant, as the case may be, shall remove, within thirty (30) days after the filing thereof, any mechanic's, materialman's or any other similar lien on the other Owner's Lot, (or on its Lot if the existence of foreclosure of such lien on its Lot would adversely affect any easement granted hereunder) arising by reason of its act or any work or materials undertaken at its request as for its benefit. In the event such Owner or Occupant fails to remove any such lien within said thirty (30) day period, the other Owner may take such action as such Owner may deem necessary to remove such lien. The curing Owner shall be entitled to reimbursement from the defaulting Owner or Occupant for all costs and expenses incurred in removing or attempting to remove such lien. However, the defaulting Owner or Occupant shall not be required to remove such lien within thirty (30) days after the filing thereof if such lien cannot be foreclosed within said thirty (30) day period and the defaulting Owner or Occupant (a) shall in good faith diligently proceed to contest the same by appropriate proceedings and shall give written notice to the other Owner of its intention to contest the validity or amount of such lien, and (b) shall deliver to the other Owner either: (i) cash or a surety bond from a responsible surety company in an amount equal to one hundred fifty percent (150%) of the lien claim and all interest and penalties then accrued thereon or such greater amount as may reasonably be required to assure payment in full of the amount claimed plus all penalties, interest and costs which may thereafter accrue by reason of such lien claim, or (ii) other security reasonably acceptable to the other Owner.

Section 2.9 **No Dedication of Easement and Benefit to Permittees**. Nothing contained in this Article II, including the grant of any or all easements herein provided, shall be deemed to constitute a dedication of any Lot, or any portion or portions thereof, to any Governmental Agencies or to the general public. Notwithstanding the foregoing, the Owners, upon their mutual consent and approval, may dedicate the Common Utility Facilities, or parts thereof, to any Governmental Agencies, subject to fulfilling the same requirements set forth above in case of relocation.

Section 2.10 **Obligation to Grant Easement to Utility Companies**. Subject to fulfilling the same requirements set forth above in case of a relocation and as may be reasonably necessary for the development of each Owner's respective Lot, each Owner shall grant easements, upon the reasonable request of the other Owners, to any Governmental Agencies, public body or utility company for the construction, installation, operation, maintenance, repair, relocation, modification, extension or alteration of sanitary sewer, storm drainage systems, fire protection installations, gas, water, power and telephone lines, mains and trunks in its Lot (so long as such utility lines are installed underground and so long as no such easement affects, limits, or interferes with any of the Common Utility Facilities or with the use of any of the Buildings for their intended purposes).

Section 2.11 **Indemnification**. Each Owner or Occupant having rights with respect to an easement granted hereunder shall indemnify and hold the Owner whose Lot is subject to the easement harmless from and against all claims, liabilities, damages, costs and expenses (including, without limitation, reasonable attorneys' fees) relating to accidents, injuries, loss, or damage of or to any person or property arising from the negligent, intentional or willful acts of omissions of such Owner or Occupant, its respective contractors, employees, agents, or other Persons acting on behalf of such Owner or Occupant on the easement parcel.

Section 2.12 **Reasonable Use of Easements**.

(a) The easements herein above granted shall be used and enjoyed by each Owner and its Permittees in such a manner so as not to unreasonably interfere with, obstruct or delay the conduct and

operations of the business of any other Owner or its Permittees at any time conducted on its Lot, including, without limitation, public access to and from said business, and the receipt or delivery of merchandise in connection therewith.

(b) Once the Utility Facilities are installed pursuant to the easements granted in Section 2.5 hereof, and/or utility lines, systems and equipment are installed pursuant to the easements granted in Section 2.6 and Section 2.7 hereof, no permanent Building, structures, trees or other improvements inconsistent with the use and enjoyment of such easements (excluding improvements typically found in common areas of similar developments) shall be placed over or permitted to encroach upon such installations. The Owner or Occupant of the Lot served by such installations shall not unreasonably withhold its consent to the reasonable relocation of such installations requested by the Owner of a Lot where such installations are located, at such requesting Owner's sole cost and expenses, so long as water detention and drainage services or utility services, as applicable, to the other Owner's Lot are not unreasonably or substantially interrupted and the remaining provisions of this Section 2.12 are complied with.

ARTICLE III
CONSTRUCTION REQUIREMENTS

Section 3.1 **"Construction" Defined**. The word "construction" includes construction, alterations, additions, repair and maintenance, replacement, rebuilding, demolition and razing permitted or required under this Declaration.

Section 3.2 **Performance of Construction**. Each Owner shall perform any construction on its Lot (a) with due diligence and in a good and workmanlike manner; (b) in accordance with Governmental Requirements; (c) only after having procured and paid for, so far as the same are required, all municipal and other governmental permits and authorizations of the various departments and Governmental Agencies; and (d) in accordance with the terms and provisions of this Declaration. Each Owner in the performance of its construction shall not: (i) cause an unnecessary or unreasonable increase in the cost of construction by the other Owners; (ii) unreasonably or materially interfere with any other construction being performed on any other Lot; (iii) unreasonably or materially interfere with business being conducted on any other Lot; or (iv) unreasonably or materially impair the use, occupancy or enjoyment of any other Lot or any part thereof as permitted or contemplated by this Declaration. Except in case of emergency, the right of any Owner to enter upon a Lot of another Owner for the exercise of any right pursuant to the easements set forth, or to prosecute work on such Owner's own Lot if the same interferes with utility or drainage easements or easements of ingress, egress or access to or in favor of another Owner's Lot, shall be undertaken only in such a manner so as to minimize any interference with the business of the other Owners and their Occupants. In such case, no affirmative monetary obligation shall be imposed upon the other Owners, and the Owner undertaking such work shall promptly and with due diligence repair at its sole cost and expense any and all damage caused by such work and restore the affected portion of the Lot upon which such work is performed to a condition which is equal to or better than the condition which existed prior to the commencement of such work. In addition, the Owner undertaking such work shall pay all costs and expenses associated therewith and shall indemnify and hold harmless the other Owner(s) and its Occupants from all costs (including reasonable attorneys' fees), damages, losses, liens or claims and judgments attributable to the performance of such work.

Section 3.3 **Subdivision**. No Owner shall subdivide or re-plat their Lot, or submit any application for subdivision or re-platting of their Lot, without the prior written consent of the other Owners. Notwithstanding the foregoing, the Declarant hereby reserves the right and each successive Owner of the Vacant Parcel shall have the right to further subdivide or re-plat the Vacant Parcel without the consent or approval of any other Owner or Person, and Declarant hereby waives the right and each

successive Owner of the Hotel Parcel and the Restaurant Parcel hereby waives the right to consent to or approve any such further subdivision or re-platting (or application for subdivision or re-platting) of the Vacant Parcel.

ARTICLE IV
MAINTENANCE, REPAIR AND RESTORATION

Section 4.1 **Maintenance Standards**. Except as otherwise expressly provide herein, each Owner shall maintain, or cause to be maintained, its Lot and all portions thereof (including, without limitation, any grass or landscaping located between its Lot and the public roadways adjacent to its Lot) in a safe and attractive condition and in a good state of repair. The unimproved portions of each Lot shall be mowed (if applicable) and kept litter free. The minimum standard of maintenance for the improved portions of each Lot shall be comparable to the standard of maintenance followed in other commercial mixed use developments of comparable size in the metropolitan area in which the Lots are located. Notwithstanding the foregoing, however, each Lot shall be operated, maintained and repaired in compliance with all Government Requirements and with the provisions of this Declaration. Each Owner shall maintain any and all Parking Areas and Driveways on its Lot in good repair and condition, including, without limitation, replacing base, skin patching, resealing, resurfacing, striping, and removal of snow, ice, trash and debris, lighting, landscaping, traffic and directional signage, payment of utilities and insurance.

Section 4.2 **Maintenance of Driveways on Vacant Parcel**. Notwithstanding anything to the contrary contained in this Declaration, the Owner of the Hotel shall be responsible to maintain, repair and replace (at its sole cost and expense) the Driveways and associated light poles and landscaping on the Vacant Parcel in accordance with the terms of this Declaration, including, without limitation, the maintenance standards described in Section 4.1 above (the "**Vacant Parcel Driveway Maintenance**") until such time as the Vacant Parcel is developed. All costs incurred in connection with the Vacant Parcel Driveway Maintenance including, without limitation, the cost to maintain insurance and utility costs shall be borne solely by the Owner of the Hotel Parcel until such time as the Vacant Parcel is developed. Once the Vacant Parcel is developed, the Owner of the Vacant Parcel shall be responsible for the Vacant Parcel Driveway Maintenance at its sole cost and expense. For purposes of this Declaration, the Vacant Parcel shall be deemed developed upon issuance of an occupancy permit or equivalent for such Vacant Parcel. All work performed by the Owner of the Hotel Parcel in the exercise of such obligations shall be completed in a good and workmanlike manner, free of liens, and in compliance with any Governmental Requirements. The Owner of the Hotel shall indemnify and hold the Owner of the Vacant Parcel harmless from and against all claims, liabilities, damages, costs and expenses (including, without limitation, reasonable attorneys' fees) relating to accidents, injuries, loss, or damage of or to any person or property arising from the acts of omissions of the Owner of the Hotel Parcel, its respective contractors, employees, agents, or other Persons acting on behalf of the Owner of the Hotel Parcel in connection with performing the Vacant Parcel Driveway Maintenance. Notwithstanding the foregoing or anything to the contrary contained in this Declaration, the Owner of the Vacant Parcel shall have the right to modify, relocate, or reconfigure the Driveways and associated light poles and landscaping on the Vacant Parcel and/or to completely remove and cap such associated light poles at any time, provided that the Owner of the Vacant Parcel shall maintain at least one (1) curb cut along West Frontage Road to maintain connectivity from each of the Lots to such public roadway.

ARTICLE V
OPERATION OF IMPROVEMENTS

Section 5.1 **No Regulations on Manner of Operations**. Except as provided below, nothing in this Article shall be deemed in any way to regulate the manner of operation or merchandise offered or the hours of day of such operation of any Owner or Occupant of any Lot. This Declaration is not intended

to and does not create or impose any obligation on any Owner or Occupant to operate, continuously operate, or cause to be operated a business or, any particular business on any Lot.

Section 5.2 **Uses**.

(a) The following uses shall not be permitted without the prior written consent of all of the Owners (which consent may be granted or withheld in the sole and absolute discretion of each Owner):

i. Any use which emits an obnoxious odor, noise, or sound which can be heard or smelled on an adjacent Lot; provided, however, odors, smoke, and noise that are typically associated with the operation of a first class restaurant with a drive-thru will not constitute a breach of this Declaration and will not be deemed noxious or offensive;

ii. Any operation primarily used as a heavy manufacturing, distilling, refining, smelting, agricultural or mining operation;

iii. Any mobile home park, trailer court, labor camp, junkyard or stockyard (except that this provision shall not prohibit the temporary use of construction trailers during periods of construction, reconstruction or maintenance);

iv. Any dumping, disposing, incineration, or reduction of garbage (exclusive of lawful garbage compactors located near the rear of any building);

v. Any central laundry or central dry cleaning plant;

vi. Any animal raising facility, pet shop or pet supply superstore or veterinary services; provided, however, this shall not prohibit the operation of a national or regional pet retail center so long as there is no outdoor kenneling of animals and ancillary indoor kenneling will only be allowed so long as there are no noises or smells associated with such indoor kenneling that emanate outside of the building;

vii. Any sexually oriented business or adult entertainment establishment including, but not limited to, strip clubs, gentlemen's clubs or establishments showing sexually oriented or adult movies or films, or the sale (at wholesale or retail) of sexually oriented or adult books, sexually oriented or adult movies, films or videos or sexually oriented or adult paraphernalia;

viii. Any flea market, amusement or video arcade, pool or billiard hall, self-serve or automated car wash (provided this shall not prohibit the operation of a full service car wash such as Waterway or any other similar car wash), tattoo parlor or dance hall;

ix. Any church, school, day care center or related religious or educational facility or religious reading room;

x. Any massage parlor (except that this provision shall not prohibit massages in connection with a beauty salon, health club or athletic facility, or any nationally branded massage parlor such as Massage Envy or Massage Luxe);

xi. Any mortuary, funeral home or crematory;

xii. Any movie theater, night club or live performance theater;

xiii. Any use that is illegal or prohibited by federal, state or local statute, law, ordinance or regulation;

xiv. Any use that is prohibited on the Property by any covenant or restriction of record;

xv. Any bar, tavern, restaurant or other establishment whose reasonably project annual gross revenues from the sale of alcoholic beverages for on-premises consumption exceeds fifty percent (50%) of the gross revenue of such business;

xvi. Any casino or other gambling facility or operation, including but not limited to, off-track or sports betting parlors, table games such as black-jack or poker, slot machines, video gambling machines and similar devices and bingo halls; and

xvii. adult entertainment establishment, including but not limited to a strip club, a gentlemen's club or an establishment showing adult movies or films, or the sale (at wholesale or retail) of adult books, adult movies, films or videos or adult paraphernalia.

(b) The Owner of each Lot covenants and agrees that in the event of a violation or threat thereof of any of the use provisions of Section 5.2(a) above, the Owner(s) or Occupant(s) of the other Lots shall suffer irreparable harm and the Owner(s) or Occupant(s) of the other Lots shall have no adequate remedy at law. As a result, each Owner further covenants and agrees that in the event of a violation or threat thereof of any of the use provisions of Section 5.2(a), each Owner or Occupant, in addition to all remedies available to such Owner or Occupant at law or under this Declaration, shall be entitled to injunctive or other equitable relief to enjoin a violation or threat thereof of Section 5.2(a) above.

Section 5.3 **Hotel Restriction**. The Owner of the Restaurant Parcel agrees that no construction, maintenance or operation of a Hotel shall be conducted on the Restaurant Property or any part thereof and neither the Restaurant Property (nor any part thereof) shall be the subject of any application for a building permit for a structure to be used as a Hotel. As used herein, a "Hotel" includes a hotel, hotel suite development, extended stay facility, motel, or inn, including, but not limited to any facility which provides for the lodging of guests or invitees from the public, with or without meals being so provided, and/or kept, used, maintained, advertised, or held out to the public as a place where sleeping accommodations are available for pay or compensation from transient guests, including but not limited to the use or any portion of a residential unit in an apartment or other residential building being used as a rental for less than one month as an "AirBNB", "VRBO" or similar accommodations for pay or other compensation.

The use restrictions in this Section 5.3 are for the benefit of the Owner of the Hotel Parcel and may be enforced by same. The Owner of the Restaurant Parcel recognizes and acknowledges that it will be difficult to compute the amount of loss or damage to the Owner of the Hotel Parcel if the Owner of the Restaurant Parcel violates any of the covenants or agreements previously mentioned. With respect to each and every breach or violation, in addition to all other remedies available to the Owner of the Hotel Parcel, the Owner of the Hotel Parcel shall be entitled to enjoin the continuance thereof and may apply to any court of competent jurisdiction for entry of an immediate restraining order or injunction. The Owner of the Hotel Parcel may pursue any remedy (injunction and damages) currently or consecutively in any order as to any such breach or violation, and the pursuit of any such remedy at any time will not be deemed an election of remedies or waiver of the right to pursue the other of such remedies. The parties acknowledge and agree that the restrictions contained in this Section 5.3 shall automatically terminate and cease to encumber the Restaurant Parcel in the event that a Hotel ceases to operate on the Hotel Parcel for

a period in excess of twelve (12) months (except that the time during which operations are prevented due to remodeling, condemnation, casualty or other event of force majeure will not count towards the 12-month period).

Redacted to protect Economic Development prospect

ARTICLE VI
ENVIRONMENTAL LAWS

Section 6.1 **Compliance with Environmental Laws**. No Owner shall use, or permit the use of Hazardous Materials on, about, under or in its Lot, or any other Lot, except in the ordinary course of its usual business operations conducted on its Lot, and any such use shall at all times be in compliance with all Environmental Laws (as hereinafter defined). Each Owner agrees to defend, protect, indemnify and hold harmless each other Owner from and against all claims or demands, including any action or proceeding brought thereon, and all costs, losses, expenses and liabilities of any kind relating thereof, including but not limited to costs of investigation, remedies, response and reasonable attorneys' fees and cost of suit, arising out of or resulting from any Hazardous Materials used or permitted to be used by such Owner, whether or not in the ordinary course of business. For the purpose of this Section 6.1, the term (i)

"**Hazardous Materials**" shall mean petroleum products, asbestos, polychlorinated biphenyls, radioactive materials and all other dangerous; toxic or hazardous pollutants, contaminants, chemicals, materials or substances listed or identified in, or regulated by, any Environmental Law, and (ii) "**Environmental Laws**" shall mean all federal, state, county, municipal, local and other statutes, laws, ordinances, rules, and regulations which relate to or deal with human health or the environment, all as may be amended from time to time.

ARTICLE VII
CONDEMNATION

Section 7.1 **Condemnation**. If any portion of the Lots shall be condemned, or conveyed under threat of condemnation, the award shall be paid to the Owner owning the land or the improvements taken, and the other Owners hereby waive and release any right to recover any value attributable to the property interest so taken, except that (i) if the taking includes improvements belonging to more than one Owner, such as Common Utility Facilities, the portion of the award allocable thereto shall be used to relocate, replace or restore such jointly owned improvements to a useful condition, and (ii) if the taking includes easement rights which are intended to extend beyond the term of this Declaration, the portion of the award allocable to each such easement right shall be paid to the respective grantee thereof. In addition to the foregoing, if a separate claim can be filed for the taking of any other property interest existing pursuant to this Declaration which does not reduce or diminish the amount paid to the Owner owning the land or the improvement taken, then the Owner of such other property interest shall have the right to seek an award for the taking thereof. Except to the extent they burden the land taken, no easement or license set forth in this Declaration shall expire or terminate based solely upon such taking.

ARTICLE VIII
INSURANCE

Section 8.1 **Duty to Carry Liability Insurance**. Each Owner and Occupant shall carry (or cause to be carried) with financially responsible insurance companies licensed to do business in the state in which the Property is located, commercial general liability insurance covering such Owner's or Occupant's legal liability in connection with claims for bodily injury or death, and property damage incurred upon or about its Lot. Such insurance shall have a single limit of coverage of not less than Two Million Dollars ($2,000,000.00) and shall name each other Owner and, to the extent possible, any mortgagee of such other Owner as an additional insured. Every five (5) years following the effective date of this Declaration, the Owners and Occupants shall increase the amount of insurance required hereunder so as to be consistent with the standard for comparable properties in the surrounding area, but in the event the parties cannot agree on the amount of the increase, the amount of insurance required shall be equal to the amount of insurance required during the preceding five (5) years increased by the percentage increase, if any, in the Consumer Price Index for All Urban Consumers, U.S. City Average-All Items published by the Bureau of Labor Statistics of the U.S. Department of Labor (the "***CPI-U***") for the preceding five (5) year period. In the event the Bureau of Labor Statistics ceases to publish the CPI-U, or materially changes the method of its computation, the parties agree to accept comparable statistics relative to the purchasing power of the U.S. dollar published by the U.S. Government, or if there is no governmental successor index, authoritative comparable statistics published in a reputable financial periodical.

Section 8.2 **Indemnification By Owners**. Each Owner agrees to defend, indemnify and save the other Owners and the respective agents, contractors, Occupants and Permittees of the other Owners harmless against and from all claims, losses, damages, costs and expenses, including reasonable attorneys' fees, because of bodily injury or death of persons or destruction of property resulting from or arising out of or in any manner connected with such Owner's construction on and use, occupancy or possession of its respective improvements and any bodily injury, death of persons or destruction of property occurring

thereafter on its Lot, except to the extent such claims are caused by the negligence or the willful act or omission of the indemnified person or its agents or employees.

Section 8.3 **Self-Insurance; Blanket Policies**. Notwithstanding the foregoing, if any Owner or Occupant maintains a net worth (as determined by generally accepted accounting principles) as certified by a recognized firm of certified public accountants in financial statements prepared for such Owner's or Occupant's most recent fiscal year, in excess of $100,000,000 such Owner or Occupant may provide all or any portion of the insurance required by this Article VIII by means of a program of self-insurance. Any Owner or Occupant may carry any insurance required to be maintained under this Article under a "blanket policy" covering other property of such Owner or Occupant or of the Person guarantying or liable for its obligations under this Declaration or of the principals or affiliates of any Owner or Occupant.

Section 8.4 **Certificate of Insurance**. Each Owner or Occupant shall, on the request of any other Owner, promptly furnish the requesting Owner a certificate evidencing such Owner's or Occupant's compliance with the insurance coverage requirements of this Article or a statement that such Owner or Occupant is a self-insurer. Each certificate of insurance shall stipulate therein that the insurance evidenced thereby shall not be materially reduced, canceled or not renewed unless thirty (30) days' prior written notice shall have been given by the insurer to the other Owners. Each casualty, fire, personal property and extended coverage insurance policy required pursuant to this Article shall contain a clause in which the underlying insurance carrier waives all rights of subrogation with respect to losses payable under such policies.

ARTICLE IX
REAL ESTATE TAXES

Section 9.1 **Payment of Taxes**. Each Owner or Occupant shall pay (or cause to be paid) before delinquency all real estate taxes and assessments (herein collectively called "**Taxes**") levied on its Lot and the Buildings and improvements situated thereon; provided that if the Taxes or any part thereof may be paid in installments, the Owner or Occupant may pay such installment as and when the same become due and payable. If the Lots are not separately assessed and until the Lots are separately assessed, each Owner or Occupant shall pay its share of Taxes as agreed in writing between the Owners.

Section 9.2 **Contesting Taxes**. Each Owner or Occupant may, at its own cost, by appropriate proceedings, contest the validity, applicability or the amount of any Taxes. Nothing in this Article shall require an Owner or Occupant to pay any Taxes so long as it contests the validity, applicability or the amount thereof in good faith and so long as it does not allow the affected Lot to be forfeited as a result of its non-payment.

ARTICLE X
EXCUSES FOR NON-PERFORMANCE

Section 10.1 **Excuses for Non-Performance**. Notwithstanding anything contained in this Declaration, each Owner or Occupant shall be excused from performing any obligation under this Declaration, and any delay in the performance of any obligation under this Declaration shall be excused, if and so long as the performance of the obligation is prevented, delayed or otherwise hindered by acts of God, fire, earthquake, floods, explosion, actions of the elements, war, riots, mob violence, inability to procure or a general shortage of labor, equipment, facilities, materials or supplies in the open market, failure of transportation, strikes, lockouts, actions of labor unions, condemnation, court orders, laws, regulations or orders of Governmental Agencies or military authorities or any other cause, whether similar or dissimilar to the foregoing, not within the control of such Owner or Occupant (other than any monetary

obligations or lack of or inability to procure funds or financing to fulfill its commitments and obligations under this Declaration).

ARTICLE XI
NOTICES AND APPROVALS

Section 11.1 **Notices and Approvals**. All notices, demands, statements and requests required or permitted to be given under this Declaration must be in writing and shall be deemed to have been properly given or served, in any event, upon actual receipt, or whether received or not, five (5) days following depositing same in the United States mails, addressed to an Owner, first-class postage prepaid, and registered or certified mail, return receipt requested, or upon delivery or attempted delivery when sent via a recognized overnight courier service, at the address set forth below, or at such other address as may be designated in accordance herewith. Notice to Declarant shall be addressed as follows:

Drury Development Corporation
Attention: Jacqueline D. Pollvogt, General Counsel
13075 Manchester Road, Suite 200
Saint Louis, Missouri 63141

subject to the right of an Owner from time to time to designate a different address by giving notice similarly given, such different address being effective under this Section from and after the day of receipt of notice thereof by such other Owner. At such time as an Owner may transfer its Lot or portion thereof to a new Owner, the transferee shall send notice to all other Owners, of the name and address to which notice to that new Owner, when such is required herein, shall be sent. In the event any Owner is a partnership or is composed of more than one Person, then such Owner shall designate one Person for purposes of service of process and receipt of notices.

ARTICLE XII
AMENDMENTS

Section 12.1 **Amendments**. This Declaration may only be amended, modified or terminated by all of the Owners of all of the Lots, and further provided that any amendment or modification, made without the consent of the mortgagee with respect to an Owner's Lot which has notified the Owners of its status as such mortgagee (and any mortgage or deed of trust instrument recorded in the Madison County, Mississippi Records as to any Owners' Lot shall be deemed sufficient notice by any mortgagee), shall not be binding upon such mortgagee without such mortgagee's consent; and except as expressly permitted by the terms of this Declaration, this Declaration shall not be terminated or amended or modified in any material respect which would or might adversely affect such mortgagee without such mortgagee's consent.

ARTICLE XIII
TERM OF AGREEMENT

Section 13.1 **Term of Agreement**. This Declaration and the rights and obligations of the Owners hereunder shall remain binding from the date hereof and shall continue until the expiration of a period of ninety-nine (99) years after the date hereof; provided, however that each Owner shall be responsible to perform all obligations imposed upon it hereunder which accrue prior to such expiration and are not fully performed as of such expiration; and further provided that the easements granted under Article II above shall survive the expiration of the term of this Declaration.

ARTICLE XIV
MISCELLANEOUS

Section 14.1 **Locative Adverbs: Terms**. The locative adverbs, "herein", "hereunder", "hereto", "hereby", "hereinafter", and like words, wherever the same appear herein, mean and refer to this Declaration in its entirety and not to any specific Article, Section or Subsection hereof, unless expressly otherwise provided. When used herein, the term, "including" shall mean "including without limitation" unless otherwise specifically provided.

Section 14.2 **Declaration for Exclusive Benefit of Owners**. Except to the extent specifically set forth herein, the provisions of this Declaration are for the exclusive benefit of the Owners hereto and not for the benefit of any other Person nor shall this Declaration be deemed to have conferred any rights, express or implied, upon any third person, and nothing herein shall be construed to create any rights in or for the benefit of any Occupant of any part of the Lots.

Section 14.3 **Default**.

(a) The occurrence of any one or more of the following events shall constitute a material default and breach of this Declaration by the non-performing Owner (the "**Defaulting Owner**"):

(i) The failure to make any payment required to be made hereunder within thirty (30) days after the due date, or

(ii) The failure to observe or perform any of the covenants, conditions or obligations of this Declaration, other than as described in (i) above, within thirty (30) days after the issuance of a notice by the other Owner (the "**Non-Defaulting Owner**") specifying the nature of the default claimed (provided, however, that if such matter cannot by its nature be corrected or cured within such thirty (30) day period, the Owner required to correct or cure such matter shall not be deemed to be in default provided it proceeds with due diligence to cure or correct such matter).

(b) With respect to any default under Sections 14.3(a)(i) or 14.3(a)(ii) above, the Non-Defaulting Owner shall have the right, but not the obligation, to cure such default by the payment of money or the performance of some other action for the account and at the expense of the Defaulting Owner; provided, however, that in the event the default shall constitute an emergency condition, the Non-Defaulting Owner, acting in good faith, shall have the right to cure such default upon such advance notice as is reasonably possible under the circumstances or, if necessary, without advance notice, so long as notice is given as soon as possible thereafter. To effectuate any such cure, the Non-Defaulting Owner shall have the right to enter upon the Lot of the Defaulting Owner (but not into any Building) to perform any necessary work or furnish any necessary materials or services to cure the default of the Defaulting Owner. Each Owner shall be responsible for the default of its Occupants.

(c) Each Non-Defaulting Owner shall have the right to prosecute any proceedings at law or in equity against the Defaulting Owner hereto or any other Person violating or attempting to violate or defaulting upon any of the provisions contained in this Declaration, and to recover damages for any such violation or default. Such proceeding shall include the right to restrain by injunction any violation or threatened violation by another of any of the terms, covenants or conditions of this Declaration, or to obtain a decree to compel performance of any such terms, covenants or conditions, it being agreed that the remedy at law for a breach of any such term, covenant or condition (except those, if any, requiring the payment of a liquidated sum) is not adequate. All of the remedies permitted or available to an Owner and for this Declaration or at law or in equity shall be cumulative and not alternative, and invocation of any

such right or remedy shall not constitute a waiver or election of remedies with respect to any other permitted or available right or remedy.

Section 14.4 **Waiver of Default**. No express, written waiver of any default shall affect any default or cover any period of time other than the default and period of time specified in such express waiver. One or more written waivers of any default in the performance of any provision of this Declaration shall not be deemed to be a waiver of any subsequent default in the performance of the same provision or any other term or provision contained herein. The consent or approval by an Owner to, or of any act or request by the other Owner requiring consent or approval shall not be deemed to waive, or render unnecessary, the consent or approval to, or of, any subsequent similar acts or requests. Unless expressly herein provided to the contrary, the rights and remedies given to an Owner by this Declaration shall be deemed to be cumulative, and none of such rights and remedies shall be exclusive of any of the others, or of any other right or remedy at law or in equity which an Owner might otherwise have by virtue of a default under this Declaration, and the exercise of one such right or remedy by an Owner shall not impair such Owner's standing to exercise any other right or remedy.

Section 14.5 **Payment on Default**. If under this Declaration an Owner is compelled or elects pursuant to this Declaration to pay any sum of money or do any acts that require the payment of money by reason of another Owner's failure or inability to perform any of the provisions of this Declaration to be performed by such other Owner, the Defaulting Owner shall promptly, upon demand, reimburse the paying Owner for such sums. All such sums shall bear interest at the rate of four percent (4%) in excess of the then publicly announced Prime Rate from the date of expenditure until the date of such reimbursement (the "**Interest Rate**"). As used herein, the Prime Rate shall mean the corporate base rate of interest as published in the *Wall Street Journal* being charged by banks to their most creditworthy corporate customers for short-term unsecured loans. The Prime Rate shall change when and on the date of any change as published in the *Wall Street Journal*. If the *Wall Street Journal* no longer publishes such a rate, then the equivalent or similar rate as published by a comparable national authority shall be used. A determination of the Interest Rate as aforesaid shall be made on the date of expenditure and on the last business day of each month thereafter and shall remain in effect until the effective date of the next determination.

Section 14.6 **No Partnerships, Joint Venture or Principal-Agent Relationship**. Neither anything in this Declaration contained nor any acts of the Owners hereto shall be deemed or construed by the Owners hereto or by any third person, to create the relationship of principal and agent, or of partnership, or of joint venture, or of any association between the Owners to this Declaration.

Section 14.7 **Successors**. This Declaration shall be binding upon and inure to the benefit of the respective successors and permitted assigns of the Owners.

Section 14.8 **Governing Laws**. This Declaration shall be construed and governed in accordance with the laws of the State of Mississippi.

Section 14.9 **Written Consent Required**. Whenever an Owner is requested to consent to or approve of any matter with respect to which its consent or approval is required by this Declaration, such consent or approval, if given, shall be given in writing and shall be given within thirty (30) days of request therefor, and if the letter requesting such consent or approval clearly indicates that if the Owner receiving the same does not refuse such consent or approval within thirty (30) days such consent or approval shall be deemed to have been given, then if such Owner shall not refuse such consent or approval within thirty (30) days, it shall be deemed to have granted such consent or approval. The consent of an Owner under this Declaration, to be effective, must be given, denied or conditioned expressly and in writing.

Section 14.10 **Reasonableness of Consent**. Unless specifically provided in this Declaration that an Owner may withhold its consent or approval in its absolute discretion, such consent or approval may be withheld only in the reasonable discretion of such Owner.

Section 14.11 **Covenants Run With the Land**. It is intended that the covenants, easements, agreements, promises and duties of each Owner as set forth in this Declaration shall be construed as covenants and that, to the fullest extent legally possible, all such covenants shall run with and be enforceable against both the covenant or and its respective Lot or constitute equitable servitudes as between the Lot of the respective covenant or, as the servient tenement, and the Lot of the respective covenanted, as the dominant tenement. Subject to the provisions of Section 13.1 above, such covenants shall terminate upon termination or expiration of this Declaration unless earlier terminated as provided for herein.

Section 14.12 **Default Shall Not Permit Termination of Declaration**. No default under this Declaration shall entitle any Owner to terminate, cancel or otherwise rescind this Declaration; provided, however, this limitation shall not affect any other rights or remedies the Owners may have by reason of any default under this Declaration.

Section 14.13 **Right to Enjoin**. In the event of any violation or threatened violation of any of the provisions of this Declaration by an Owner or Occupant the other Owners shall have the right to apply to a court of competent jurisdiction for an injunction against such violation or threatened violation, or for a decree of specific performance or both remedies.

Section 14.14 **Severability**. Invalidation of any of the provisions contained in this Declaration, or of the application thereof to any Person by judgment or court order shall in no way affect any of the other provisions hereof or the application thereof to any other Person and the same shall remain in full force and effect.

[signature on following page]

IN WITNESS WHEREOF, Declarant has caused its duly authorized officer to sign and seal this Declaration as of the day and year first above written.

DECLARANT:

DRURY DEVELOPMENT CORPORATION

By:_____
Mark A. Kohl, Senior Vice President

Signed, sealed and delivered in the presence of:

_____
Unofficial Witness

_____
Unofficial Witness

STATE OF MISSOURI)
)
COUNTY OF ST. LOUIS)

Before me, a Notary Public in and for the State and County aforesaid, personally appeared Mark A. Kohl, who, being first duly sworn, acknowledged that he is the Senior Vice President of Drury Development Corporation, a Missouri corporation, and acknowledged execution of the foregoing Declaration for and on behalf of said company, as its duly authorized Senior Vice President.

Witness my hand and Notarial Seal this ____ day of _____, 202__.

_____
Notary Public

My Commission Expires:

_____

[Seal]

EXHIBIT A

Depiction of the Property/Plat of Property

EXHIBIT B

Legal Description of the Restaurant Parcel

EXHIBIT C

Legal Description of the Hotel Parcel

EXHIBIT D

Legal Description of the Vacant Parcel

EXHIBIT E

The Site Plan

(Depicts the Driveways, Parking Areas, Pylon Sign Easement Area, Sight Line Easement Area, and Monument Sign Easement Area)

EXHIBIT F

Monument Sign – Sign Panel Locations

the city of RIDGELAND

public works

MEMORANDUM

TO: The Mayor and Board of Aldermen

FROM: Alan Hart, Public Works Director

DATE: December 31, 2024

RE: **City-owned Detention Pond Fence**
Jefcoat Fence Company, Inc.
Trace Ridge Subdivision

The Public Works Department respectfully requests that the Mayor and Board of Aldermen designate Jefcoat Fence Company, Inc. as the lowest bidder for the installation of a new fence surrounding the city-owned detention pond in Trace Ridge Subdivision. The Public Works Department further requests that the Mayor and Board authorize the Department to issue a Purchase Order for the Commercial Grade Ornamental Iron Fence in the amount of $52,539.00. Thank you for your consideration of this matter.

mailing address: P.O. Box 217 • Ridgeland, Ms 39158
street address: 100 W. School Street • Ridgeland, Ms 39157
ph: 601.853.2027 • fax: 601.853.2019 • www.ridgelandms.org

Gene F. McGee, cmo - mayor • Alan Hart - director of public works

board of aldermen: D.I. Smith, cmo - at-large • Ken Heard, cmo - ward 1 • Chuck Gautier, cmo - ward 2
Kevin Holder, cmo - ward 3 • Brian P. Ramsey, cmo - ward 4 • Bill Lee - ward 5 • Wesley Hamlin, cmo, mayor pro tempore - ward 6

the city of RIDGELAND

public works

MEMORANDUM

TO: The Mayor and Board of Aldermen

FROM: Alan Hart, Public Works Director

DATE: December 31, 2024

RE: **Budget Amendment (Project Budget)**
East County Line Road Improvements Project – STP-7305-00(12)LPA

A the time of budgeting for FY2025, it was believed that the East County Line Road Resurfacing Project would have been completed by 9/30/24; however, the closeout phase took longer than expected. As a result, there were no expenses budgeted, but there is a remaining project fund balance. The Public Works Department respectfully requests that the Mayor and Board of Aldermen approve the budget amendment of the following lines items to budget the expenses from the project fund balance:

East County Line Road Improvements Project Fund

• Increase Grants:	316-000-203	$32,782
• Increase Aid from other Govts:	316-000-275	$6,236
• Increase Engineering:	316-601-600	$16,543
• Increase Contractors:	316-601-750	$24,434
• Increase Other:	316-601-760	$4,278
• Decrease Fund balance:	316-000-192	$6,237

Thank you for your consideration of this matter.

mailing address: P.O. Box 217 · Ridgeland, Ms 39158
street address: 100 W. School Street · Ridgeland, Ms 39157
ph: 601.853.2027 · fax: 601.853.2019 · www.ridgelandms.org

Gene F. McGee, cmo - mayor · Alan Hart - director of public works

board of aldermen: D.I. Smith, cmo - at-large • Ken Heard, cmo - ward 1 • Chuck Gautier, cmo - ward 2
Kevin Holder, cmo - ward 3 • Brian P. Ramsey, cmo - ward 4 • Bill Lee - ward 5 • Wesley Hamlin, cmo, mayor pro tempore - ward 6

the city of RIDGELAND

public works

MEMORANDUM

TO: The Mayor and Board of Aldermen

FROM: Alan Hart, Public Works Director

DATE: December 31, 2024

RE: **Budget Amendment (Project Budget Transfer)**
From: ARPA/MCWI City-wide Advanced Water Meter Improvements-63-1-DW-5.15
To: ARPA/MCWI Highland Colony Parkway Tank and Well Project-64-1-DW-5.15

The Public Works Department respectfully requests that the Mayor and Board of Aldermen approve the budget amendment of the following lines items that transfers the remaining balance of ARPA and MCWI funds from the Water Meter Project to the HCP Tank and Well Project:

From: ARPA/MCWI City-wide Advanced Water Meter Improvements-63-1-DW-5.15

- Decrease Fund Balance: $62,706 467-000-192
- Transfer Out: $62,706 467-650-920
- (Note: The MCWI grant revenue was not budgeted for 2025 since the project was anticipated to be complete by 9/30/24.

To: ARPA/MCWI Highland Colony Parkway Tank and Well Project-64-1-DW-5.15

- Increase Transfer In: $62,706 475-000-380
- Increase Grant: $62,706 475-000-203
  (MCWI Matching Funds)
- Increase Fund Balance: $125,412 475-000-192

The Fund Balance left over in the HCP Tank and Well Project will remain as a surplus as long as the project finishes as projected. If the surplus survives, the ARPA and MCWI funds will be fully expended and the amount earmarked for the EPA Grant will be transferred out to the EPA Project account. The purpose of spending the ARPA/MCWI funds first is due to the grant program's funding deadline. Thank you for your consideration of this matter.

mailing address: P.O. Box 217 · Ridgeland, Ms 39158
street address: 100 W. School Street · Ridgeland, Ms 39157
ph: 601.853.2027 · fax: 601.853.2019 · www.ridgelandms.org

Gene F. McGee, cmo - mayor · Alan Hart - director of public works

board of aldermen: D.I. Smith, cmo - at-large • Ken Heard, cmo - ward 1 • Chuck Gautier, cmo - ward 2
Kevin Holder, cmo - ward 3 • Brian P. Ramsey, cmo - ward 4 • Bill Lee - ward 5 • Wesley Hamlin, cmo, mayor pro tempore - ward 6

the city of RIDGELAND

public works

MEMORANDUM

TO: The Mayor and Board of Aldermen

FROM: Alan Hart, Public Works Director

DATE: December 31, 2024

RE: **Preliminary Engineering Invoice No. 2302440-2**
Garver – for pay period through November 2024
Ridgeland I-55 LED Lighting Conversion Project

The Public Works Department respectfully requests that the Mayor and Board of Aldermen approve payment in the amount of $13,050.00 to Garver for work completed on the referenced project. This invoice is funded through the I-55 Lighting Project fund. Preliminary Engineering requires the use of the budgeted local funds. Thank you for your consideration of this matter.

mailing address: P.O. Box 217 · Ridgeland, Ms 39158
street address: 100 W. School Street · Ridgeland, Ms 39157
ph: 601.853.2027 · fax: 601.853.2019 · www.ridgelandms.org

Gene F. McGee, cmo - mayor · Alan Hart - director of public works

board of aldermen: D.I. Smith, cmo - at-large • Ken Heard, cmo - ward 1 • Chuck Gautier, cmo - ward 2
Kevin Holder, cmo - ward 3 • Brian P. Ramsey, cmo - ward 4 • Bill Lee - ward 5 • Wesley Hamlin, cmo, mayor pro tempore - ward 6

1076 Highland Colony Pkwy Ste. 325
Ridgeland, MS 39157
601-825-3633

www.GarverUSA.com

INVOICE

Alan Hart
City of Ridgeland, MS
100 W. School St.
Ridgeland, MS 39157

December 18, 2024
Garver Project No : 2302440
Invoice No : 2302440-2

Project: Ridgeland LED Interstate Lighting Conversion

Professional Engineering Services through November 29, 2024

	Percent Complete	Contract Amount	Total Billed to Date	Previous Billings	Current Billing
Lump Sum Services					
Project Admin/ Field Review	100%	$15,000.00	$15,000.00	$13,500.00	$1,500.00
Office Review	33%	$35,000.00	$11,550.00	$0.00	$11,550.00
PS&E	0%	$20,000.00	$0.00	$0.00	$0.00
Bidding	0%	$5,000.00	$0.00	$0.00	$0.00
Totals		**$75,000.00**	**$26,550.00**	**$13,500.00**	**$13,050.00**

Total Amount This Invoice **$13,050.00**

Authorized by: M. Shannon Wells

Shannon Wells PE, PS
Senior Project Engineer

Remit Payment To:

For delivery via regular US postal service:
Garver, LLC
P.O. Box 736556
Dallas, TX 75373-6556

For delivery via overnight courier service:
JPMorgan Chase (TX1-0029)
Attn: Garver, LLC P.O. Box 736556
14800 Frye Road, 2nd Floor
Fort Worth, TX 76155

the city of RIDGELAND

public works

MEMORANDUM

TO: Mayor Gene F. McGee and Board of Aldermen

FROM: Christopher W. Bryson, P.E., City Engineer

DATE: December 16, 2024

RE: **SOLE SOURCE LETTER FOR CC LYNCH & ASSOCIATES, INC.**
EMCSDS + RWSDS Wastewater Metering Station System

We respectfully request the Mayor and Board of Aldermen authorize *CC Lynch & Associates, Inc.*as the sole source vendor for purchase Teledyne ISCO products. *CC Lynch & Associates, Inc.* is the only authorized representative of Teledyne ISCO equipment for our region. These products are used at all of our wastewater metering station sites throughout the City of Ridgeland and the East Madison County Sewer District which include flow monitoring equipment, operation software, data hosting servers, and communication equipment.

We are requesting your sole source approval for purchasing the equipment quoted in the attachment from *CC Lynch & Associates, Inc.* in order to move the Rice Road, East Metering Station site to an upstream manhole with more conducive flow conditions. This expense is budgeted in the EMCSDS fund in account no. *404-650-730, Capital Machinery and Equipment.*

Thank you for your consideration of our request. Please contact me if you have any questions.

Cc: Alan Hart, Public Works Director

mailing address P O Box 217 · Ridgeland, Ms 39158
street address 100 W School Street · Ridgeland, Ms 39157
ph 601 853 2027 · fax 601 853 2019 · www ridgelandms org

Gene F McGee cmo - mayor · Alan Hart - director of public works

board of aldermen: D I Smith cmo - at-large · Ken Heard cmo - ward 1 · Chuck Gautier, cmo - ward 2
Kevin Holder, cmo - ward 3 · Brian P Ramsey, cmo - ward 4 · Bill Lee - ward 5 · Wesley Hamlin, cmo mayor pro tempore - ward 6

TELEDYNE ISCO
Everywhereyoulook™

December 13, 2024

Attention: To Whom It May Concern

Subject: Sole Source Letter

This is to certify that Teledyne ISCO, a business unit of Teledyne Instruments, Inc. is the sole manufacturer of Teledyne ISCO and QCEC automatic water/wastewater sampling and flow monitoring equipment. These items include but are not limited to flowmeters, samplers, rain gauges, connecting cables, and associated hardware, as well as operational and flow management software. Equipment and parts can be obtained either directly from Teledyne ISCO or through our local representative, C.C. Lynch & Associates, Inc.

C.C. Lynch & Associates, Inc., with offices located at 300 Davis Avenue, Pass Christian, Mississippi 39571, is the authorized exclusive Teledyne ISCO Sales Representative and Distributor for the following territory:

- Alabama.
- Mississippi.
- Louisiana.
- Florida including the counties of:
  - Gulf, Calhoun, Jackson, Bay, Washington, Holmes, Walton, Okaloosa, Santa Rosa, and Escambia.
- Texas south of and including the counties of:
  - Bailey, Lamb, Hale, Floyd, Motley, Cottle, and Hardeman.

This letter is valid until May 13, 2026.

Best Regards,

Sonja Zehl
Senior Contracts Manager
Teledyne ISCO, a business unit of Teledyne Instruments, Inc.

QUOTATION

Quote #	00017835 V2
Date	12/13/2024
CCLYNCH Vendor #	01-03297
Prepared By	Hewson Lynch
Email	hewson@cclynch.com
Est. Shipment	3-4 Weeks ARO
Contact Name	Chris Bryson
Email	chris.bryson@ridgelandms.org

Bill To Name	City of Ridgeland
Billing Address	PO Box 217 Ridgeland, MS 39158
Shipping Company Name	City of Ridgeland
Ship To	240 West School Street Ridgeland, MS 39157
A/P Email Address	renee.buckner@ridgelands.org
Sales Tax Status	Tax Exempt Entity
Credit Terms	Net 30 Days
Shipping Terms	F.O.B.: Origin PP&A

Quantity	Manufacturer	Part Number	Description	Sales Price	Total Price
1.00	Isco	684800041	DuraTracker with Battery Box, Global LTE modem, LTE Antenna, Lantern Battery Holders, Suspension Strap and coupon for free Isco Open Channel Flow Measurement Handbook. Requires Flowlink software and computer connect cable (sold separately)	$5,292.00	$5,292.00
1.00	Isco	604364060	TIENet® 360 LaserFlow™ sensor with 75 ft (23 m) cable and built-in ultrasonic level sensor . Cable is terminated with a TIENet plug for connection to a Signature® portable meter or a 2160 LaserFlow module (not included).	$11,777.00	$11,777.00
1.00	Isco	604364003	Permanent wall mount for TIENet® 360 LaserFlow™ sensor.	$1,085.00	$1,085.00
1.00	Isco	340406001	6V Lantern batteries – Qty 6	$120.00	$120.00
1.00	Isco	604364033	Sensor Retrieval Tool	$299.00	$299.00
1.00	Isco	CELLSERVICE	First year ICell subscription for Cellular service with 10MB/month data and 25 SMS/month. Customer contact details required: Name, Email and Phone number. The customer acknowledges that Teledyne ISCO is the sole point of contact for ICell subscription customer service. Per cell phone/Per year	$120.00	$120.00
1.00	Isco	682541010	Flowlink Cipher for 10 to 24 active sites. Price is per site per year. Please multiply with number of sites	$300.00	$300.00
1.00	Isco	603204012	Street Level Installation Tool Multi-section pole. Includes one 2-1/2 ft. pole section with adapter for attaching mounting ring, and six 2-1/2 ft. pole sections.	$1,171.00	$1,171.00
1.00	R Thibeaux LLC	ConfSpace1Day	Confined Space Service Daily Rate	$2,600.00	$2,600.00
1.00	Field Service	FieldServiceDay	Field Service Visit to inspect and calibrate flow meters. Daily Rate	$1,900.00	$1,900.00

Subtotal	$24,664.00
Shipping Charges	$441.00
Grand Total	$25,105.00

- **Sales Tax** is not normally quoted due to State & Local variability. If you require Sales Tax to be included in this quotation, please contact us.

Please address order to:

CC LYNCH & ASSOCIATES, INC.
P.O. Box 836 Pass Christian, MS 39571

800-333-2252 228-452-2563 fax
email: info@cclynch.com

Important:

- **Payment Terms** are **NET 30** unless otherwise negotiated.
- For **Credit Card Payment**, add +3.75% transaction fee.

- If your organization is a **tax-exempt entity**, please email or fax your tax-exempt certificate to **admin@cclynch.com** or fax to (228) 452-2563. Tax rates will be based on delivery address of the order.

Terms & Conditions

1. OFFERS. Unless stated otherwise in writing by Seller, all Offers made by Seller shall be valid for a period of no-less-than thirty (30) days from the date of such Offer. Unless accepted by Buyer within the Offer validity period, Seller reserves the right to withdraw and/or revise its Offer. The prices offered by Seller apply only to the specific quantities, specifications, delivery schedules, and terms and conditions set forth in Seller's Offer.

2. ACCEPTANCE. The terms and conditions herein apply to all Offers made by Seller, and all Orders accepted by Seller. Acceptance of Buyer's Order, and any changes or amendments thereto, is strictly conditioned upon Buyer's assent to Seller's terms and conditions. Unless otherwise agreed upon in writing by a duly authorized representative of Seller, Seller objects to, and is not bound by, any terms or conditions that differ from, add to, or modify the terms and conditions herein. Seller's failure to object to any terms and conditions or any other provisions contained in any communication from Buyer, including, but not limited to, Buyer's Order and any changes or amendments thereto, does not waive any of the terms and conditions specified herein. Seller's acceptance of Buyer's Order or Buyer's receipt of Goods, whichever occurs first, shall conclusively evidence Buyer's unconditional acceptance of these terms and conditions. The terms and conditions herein shall be applicable whether or not they are attached to or enclosed with Goods and/or Services sold or to be sold hereunder.

3. PRICES. Unless otherwise agreed in writing by a duly authorized representative of Seller, all prices are stated in United States Dollars, and all invoices issued by Seller and payments made by Buyer shall be in United States Dollars. A minimum Order amount of $50.00 applies to all Orders.

4. PAYMENT TERMS. Subject to Seller approval of Buyer's credit, payment terms for Orders are net thirty (30) days from date of Seller's invoice. All amounts due to Seller but not paid by Buyer on the due date bear interest payable at a rate equal to the lesser of (a) one and one-half percent (1.5%) of the outstanding balance per month, or (b) the maximum interest rate permitted under applicable law. Interest accrues on past due amounts as of the date on which such amounts become due until the date Seller receives payment from Buyer. Buyer shall also be liable to Seller for any expenses incidental to collection of past due amounts, including reasonable attorneys' fees and court costs.

5. TAXES. The amount of any present or future sales, use, excise, import duty, or other tax applicable to the manufacture, sale, or lease of Goods shall be added to Seller's invoice and shall be paid by Buyer, unless Buyer provides Seller a valid tax exemption certificate acceptable to the applicable taxing authority.

6. SHIPPING TERMS, TITLE, AND RISK OF LOSS. Unless shown to be otherwise on the face of this Quotation, all domestic shipments shall be delivered F.O.B. Origin shipping dock in accordance with UCC. Buyer agrees to remit payment to Seller for actual transportation charges or standard shipping and handling charges per Seller's pre-determined standard fee structures, whichever applies.

7. LIMITED WARRANTY. Seller provides Goods that include a Limited Warranty by the Manufacturer. The specific warranty for a given Good is the one in effect on date of shipment. This warranty does not apply to any Goods that, upon examination by Seller, are found to have been (a) mishandled, misused, abused, or damaged by Buyer or Buyer's customer, (b) altered or repaired without Seller's prior written approval, or (c) improperly stored, installed, operated, or maintained in a manner inconsistent with Seller's instructions. Limited warranties do not apply to defects attributed to normal wear and tear.
See specific warranty statements from the manufacturers Goods provided herein.

8. GOVERNING LAW AND VENUE. The performance of the Parties, and any judicial or arbitration proceedings, shall be construed and governed in accordance with the laws of the State of Mississippi, United States of America, excepting its laws and rules relating to conflict of law.

the city of RIDGELAND

police department

December 30, 2024

TO: Mayor & Board of Aldermen

FROM: Brian Myers, Chief of Police

SUBJECT: Surplus Vehicle

I am requesting the following vehicles to be declared surplus and turned over to the insurance company.

RPD #	YEAR	MAKE	MODEL	VIN	FX ASSET#
P375	2021	Dodge	Charger	2C3CDXAT4MH523353	100-1-00868
P357	2018	Dodge	Charger	2C3CDXAG6JH230309	100-1-00821
P385	2021	DODGE	Charger	2C3CDXAT0MH668437	100-1-00882

Your consideration and approval of this request will be greatly appreciated.

115 west school street · ridgeland, ms 39157
ph: 601.856.2121 · www.ridgelandms.org

Gene F. McGee, cmo - mayor · Brian Myers - chief of police
board of aldermen: D.I. Smith, cmo - at-large · Ken Heard, cmo - ward 1 · Chuck Gautier, cmo - ward 2
Kevin Holder, cmo - ward 3 · Brian P. Ramsey, cmo - ward 4 · Bill Lee - ward 5 · Wesley Hamlin, cmo, mayor pro tempore - ward 6

the city of RIDGELAND

police department

December 30, 2024

TO: Mayor and Board of Aldermen

FROM: Brian Myers, Chief of Police

SUBJECT: Review and Approve GrayKey Subscription Renewal

Please review for approval the subscription renewal and sole source letter from Magnet Forensics for the GrayKey License software.

Your consideration and approval will be greatly appreciated.

115 west school street · ridgeland, ms 39157
ph: 601.856.2121 · www.ridgelandms.org

Gene F. McGee, cmo - mayor · Brian Myers - chief of police
board of aldermen: D.I. Smith, cmo - at-large · Ken Heard, cmo - ward 1 · Chuck Gautier, cmo - ward 2
Kevin Holder, cmo - ward 3 · Brian P. Ramsey, cmo - ward 4 · Bill Lee - ward 5 · Wesley Hamlin, cmo, mayor pro tempore - ward 6

DocuSign Envelope ID: E576C244-B2D3-43BC-B92E-88999FC7A007

MAGNET FORENSICS®

June 6, 2024

To Whom it May Concern,

RE: SOLE MANUFACTURER LETTER

This letter is to confirm that Magnet Forensics, LLC, together with its affiliated companies are the sole manufacturer of the following products:

- MAGNET ATLAS
- MAGNET AXIOM
- MAGNET AXIOM CYBER
- MAGNET REVIEW
- MAGNET OUTRIDER
- MAGNET AUTOMATE
- MAGNET IGNITE
- MAGNET SHIELD
- MAGNET WITNESS
- MAGNET GRAYKEY
- MAGNET GRAYKEY FASTRAK
- MAGNET VERAKEY
- MAGNET ARTIFACT IQ
- MAGNET DVR EXAMINER
- MAGNET GRIFFEYE
- MAGNET NEXUS
- MAGNET ONE

Should you require any additional information regarding our company products and services, please do not hesitate to contact your sales representative directly or by email at sales@magnetforensics.com.

Sincerely,

DocuSigned by:
Adam Belsher
C25EF1230BA4477...

Adam Belsher
CEO
Magnet Forensics, LLC

DS
Reviewed by Legal
Jocelyn Ngo

Req # 00033657 SP 12/16/24
PO # 25-80453

MAGNET FORENSICS®

Magnet Forensics, LLC
931 Monroe Drive NE, Suite A102-340
Atlanta GA 30308
Phone: 1-844-638-7884
www.magnetforensics.com

Invoice
#SIN075656

Bill To

Brett Bertucci
City of Ridgeland, Accounts Payable Dept.
PO Box 217
Ridgeland MS 39158
United States

Ship To

Brett Bertucci
Ridgeland City Hall
100 West School Street
Ridgeland MS 39157
United States

Invoice Date: 13 Dec 2024
Due Date: 12 Jan 2025
Quote: Q-340554
Contract: C-00094561

End User	Terms	PO #	Currency
CUS10273 Ridgeland Police Department (MS)	Net 30	25-80453	USD

Item	Contract Term	Quantity	Rate	Amount
GKL-ONF-ES GrayKey License - Essentials	12/27/2024 - 12/26/2025	1	$11,820.00	$11,820.00

Subtotal	USD $11,820.00
Tax Total (%)	USD $0.00
Total	USD $11,820.00
Amount Paid	USD $0.00
Amount Due	USD **$11,820.00**

TIN: 813806753
DUNS number: 081045174
CAGE Code: 7R0W9

EFFECTIVE OCTOBER 1, 2023, OUR BANKING INFORMATION HAS CHANGED
PLEASE REVIEW AND AMEND YOUR RECORDS WITH THE BELOW DETAILS AS REQUIRED

Banking Information

ACH Payments:
ABA: 072000326
Account: 915239880

Wire Payments:
ABA: 021000021
Account: 915239880
SWIFT Code: CHASUS33

Bank Address:
JP Morgan Chase
270 Park Avenue
New York, NY 10017

Check Payments:
Magnet Forensics LLC
P.O. Box 737312
Dallas, TX 75373-7312

Credit Card Payments:
For payments via AMEX, MC or VISA, use the link below.

Please send any questions or payment information to ar@magnetforensics.com

Magnet Forensics, LLC
931 Monroe Drive NE, Suite A102-340
Atlanta GA 30308
Phone: 1-844-638-7884
www.magnetforensics.com

Invoice
#SIN075656

CLICK TO PAY NOW

Please send any questions or payment information to ar@magnetforensics.com

the city of RIDGELAND

police department

December 30, 2024

TO: Mayor & Board of Aldermen

FROM: Brian Myers, Chief of Police

SUBJECT: Surplus Vehicle

I am requesting the following vehicles to be declared surplus and donated to Durant Police Department.

RPD #	YEAR	MAKE	MODEL	VIN	FX ASSET#
P299	2011	Dodge	Charger	2B3CL1CGXBH582384	100-1-00630

Your consideration and approval of this request will be greatly appreciated.

115 west school street · ridgeland, ms 39157
ph: 601.856.2121 · www.ridgelandms.org

Gene F. McGee, cmo - mayor · Brian Myers - chief of police
board of aldermen: D.I. Smith, cmo - at-large · Ken Heard, cmo - ward 1 · Chuck Gautier, cmo - ward 2
Kevin Holder, cmo - ward 3 · Brian P. Ramsey, cmo - ward 4 · Bill Lee - ward 5 · Wesley Hamlin, cmo, mayor pro tempore - ward 6

CITY OF DURANT

253 W. Mulberry Street • P.O. Box 272 • Durant, MS 39063
Webpage: www.cityofdurantms.com
Phone: (662) 653-3221
Fax: (662) 653-6847

John Haynes, Sr.
Mayor

Leotha "Bo" Patterson
Vice Mayor

Tommy Pender,
Acting Asst. **Chief**
Durant Police Department

Ursula Perry
City Clerk

Alderpersons
Ricky Fletcher
Terry Floyd
Linda McDonald
Dr. Henry Robinson, Jr.

Marcus Landfair, **Chief**
Durant Fire Department

Shannon Gallagher
Court Clerk

Durant Police Department
253 West Mulberry St
Durant, MS 39063
December 10, 2024

Brian Myers
Ridgeland Police Department
115 West School St
Ridgeland, MS 39157

Dear Chief Myers,

Thank you for your generous donation to the Durant Police Department. Because of this gift, we are able to increase not only our vehicle fleet, but the visibility of our Officer's to deter criminal activity.

Sincerely,

John Haynes

John Haynes, Mayor
City of Durant

Municipal Compliance Questionnaire

As part of the municipality's audit, the governing authorities of the municipality must make certain assertions with regard to legal compliance. The municipal compliance questionnaire was developed for this purpose.

The following questionnaire and related certification must be completed at the end of the municipality's fiscal year and entered into the official minutes of the governing authorities at their next regular meeting.

The governing authorities should take care to answer these questions accurately. Incorrect answers could reduce the auditor's reliance on the questionnaire responses, resulting in the need to perform additional audit procedures at added cost.

Information

Note: Due to the size of some municipalities, some of the questions may not be applicable. If so, mark N/A in answer blanks. Answers to other questions may require more than "yes" or "no," and, as a result, more information on this questionnaire may be required and/or separate work papers may be needed.

1. Name and address of municipality:
   CITY OF RIDGELAND,100 W SCHOOL ST, PO BOX 217, RIDGELAND, MS 39158

2. List the date and population of the latest official U.S. Census or most recent official census:
   24,380

3. Names, addresses and telephone numbers of officials (include elected officials, chief administrative officer, and attorney).
   SEE PAGE IV-B6

4. Period of time covered by this questionnaire:

   From: 10/1/2023 To: 9/30/2024

5. Expiration date of current elected officials' term: 6/30/2025

MUNICIPAL COMPLIANCE QUESTIONNAIRE
Year Ended September 30, 2024

Answer All Questions: **Y** - YES, **N** - NO, **N/A** - NOT APPLICABLE

PART I - General

1. Have all ordinances been entered into the ordinance book and included in the minutes? (Section 21-13-13) Y

2. Do all municipal vehicles have public license plates and proper markings? (Sections 25-1-87 and 27-19-27) Y

3. Are municipal records open to the public? (Section 25-61-5) Y

4. Are meetings of the board open to the public? (Section 25-41-5) Y

5. Are notices of special or recess meetings posted? (Section 25-41-13) Y

5. Are all required personnel covered by appropriate surety bonds?
   - Board or council members (Sec. 21-17-5) Y
   - Appointed officers and those handling money, see statutes governing the form of government (i.e., Section 21-3-5 for Code Charter) Y
   - Municipal clerk (Section 21-15-38) Y
   - Deputy clerk (Section 21-15-23) Y
   - Chief of police (Section 21-21-1) Y
   - Deputy police (Section 45-5-9) (if hired under this law) _____

7. Are minutes of board meetings prepared to properly reflect the actions of the board? (Sections 21-15-17 and 21-15-19) Y

8. Are minutes of board meetings signed by the mayor or majority of the board within 30 days of the meeting? (Section 21-15-33) Y

9. Has the municipality complied with the nepotism law in its employment practices? (Section 25-1-53) Y

10. Did all officers, employees of the municipality, or their relatives avoid any personal interest in any contracts with the municipality during their term or within one year after their terms of office or employment? (Section 25-4-105) Y

11. Does the municipality contract with a Certified Public Accountant or an auditor approved by the State Auditor for its annual audit within twelve months of the end of each fiscal year? (Section 21-35-31) Y

12. Has the municipality published a synopsis or notice of the annual audit within 30 days of acceptance? (Section 21-35-31 or 21-17-19) Y

PART II - Cash and Related Records

1. Where required, is a claims docket maintained? (Section 21-39-7) Y

2. Are all claims paid in the order of their entry in the claims docket? (Section 21-39-9) Y

3. Does the claims docket identify the claimant, claim number, amount and fund from which each warrant will be issued? (Section 21-39-7) Y

4. Are all warrants approved by the board, signed by the mayor or majority of the board, attested to by the clerk, and bearing the municipal seal? (Section 21-39-13) Y

5. Are warrants for approved claims held until sufficient cash is available in the fund from which it is drawn? (Section 21-39-13) Y

6. Has the municipality adopted and entered on its minutes a budget in the format prescribed by the Office of the State Auditor? (Sections 21-35-5, 21-35-7 and 21-35-9) Y

7. Does the municipality operate on a cash basis budget, except for expenditures paid within 30 days of fiscal year end or for construction in progress? (Section 21-35-23) Y

8. Has the municipality held a public hearing and published its adopted budget? (Sections 21-35-5, 27-39-203, & 27-39-205) Y

9. Has the municipality complied with legal publication requirements when budgetary changes of 10% or more are made to a department's budget? (Section 21-35-25) Y

10. If revenues are less than estimated and a deficit is anticipated, did the board revise the budget by its regular July meeting? (Section 21-35-25) Y

11. Have financial records been maintained in accordance with the chart of accounts prescribed by the State Auditor? (Section 21-35-11) Y

12. Does the municipal clerk submit to the board a monthly report of expenditures against each budget item for the preceding month and fiscal year to date and the unexpended balances of each budget item? (Section 21-35-13) Y

13. Does the board avoid approving claims and the city clerk not issue any warrants which would be in excess of budgeted amounts, except for court-ordered or emergency expenditures? (Section 21-35-17) Y

14. Has the municipality commissioned municipal depositories? (Sections 27-105-353 and 27-105-363) Y

15. Have investments of funds been restricted to those instruments authorized by law? (Section 21-33-323) Y

16. Are donations restricted to those specifically authorized by law? [Section 21-17-5 (Section 66, Miss. Constitution) -- Sections 21-19-45 through 21-19-59, etc.] Y

17. Are fixed assets properly tagged and accounted for? (Section II - Municipal Audit and Accounting Guide) Y

18. Is all travel authorized in advance and reimbursements made in accordance with Section 25-3-41? Y

19. Are all travel advances made in accordance with the State Auditor's regulations? (Section 25-3-41) Y

PART III - Purchasing and Receiving

1. Are bids solicited for purchases, when required by law (written bids and advertising)? [Section 31-7-13(b) and (c)] Y

2. Are all lowest and best bid decisions properly documented? [Section 31-7-13(d)] Y

3. Are all one-source item and emergency purchases documented on the board's minutes? [Section 31-7-13(m) and (k)] Y

4. Do all officers and employees understand and refrain from accepting gifts or kickbacks from suppliers? (Section 31-7-23) Y

PART IV - Bonds and Other Debt

1. Has the municipality complied with the percentage of taxable property limitation on bonds and other debt issued during the year? (Section 21-33-303) Y

2. Has the municipality levied and collected taxes, in a sufficient amount for the retirement of general obligation debt principal and interest? (Section 21-33-87) Y

3. Have the required trust funds been established for utility revenue bonds? (Section 21-27-65) Y

4. Have expenditures of bond proceeds been strictly limited to the purposes for which the bonds were issued? (Section 21-33-317) Y

5. Has the municipality refrained from borrowing, except where it had specific authority? (Section 21-17-5) Y

PART V - Taxes and Other Receipts

1. Has the municipality adopted the county ad valorem tax rolls? (Section 27-35-167) Y

2. Are interest and penalties being collected on delinquent ad valorem taxes? (Section 21-33-53) Y

3. Has the municipality conducted an annual land sale for delinquent ad valorem taxes? (Section 21-33-63) Y

4. Have the various ad valorem tax collections been deposited into the appropriate funds? (Separate Funds for Each Tax Levy) (Section 21-33-53) Y

5. Has the increase in ad valorem taxes, if any, been limited to amounts allowed by law? (Sections 27-39-320 and 27-39-321) Y

6. Are local privilege taxes collected from all businesses located within the municipality, except those exempted? (Section 27-17-5) Y

7. Are transient vendor taxes collected from all transient vendors within the municipality, except those exempted? (Section 75-85-1) Y

8. Is money received from the state's "Municipal Fire Protection Fund" spent only to improve municipal fire departments? (Section 83-1-37) Y

9. Has the municipality levied or appropriated not less than 1/4 mill for fire protection and certified to the county it provides its own fire protection or allowed the county to levy such tax? (Sections 83-1-37 and 83-1-39) Y

10. Are state-imposed court assessments collected and settled monthly? (Section 99-19-73, 83-39-31, etc.) Y

11. Are all fines and forfeitures collected when due and settled immediately to the municipal treasury? (Section 21-15-21) Y

12. Are bids solicited by advertisement or, under special circumstances, three appraisals obtained when real property is sold? (Section 21-17-1) Y

13. Has the municipality determined the full and complete cost for solid waste for the previous fiscal year? (Section 17-17-347) Y

14. Has the municipality published an itemized report of all revenues, costs and expenses incurred by the municipality during the immediately preceding fiscal year in operating the garbage or rubbish collection or disposal system? (Section 17-17-348) Y

15. Has the municipality conducted an annual inventory of its assets in accordance with guidelines established by the Office of the State Auditor? (MMAAG) Y

Mayor Gene McGee
PO Box 217
Ridgeland, MS 39157
601-856-7113

Alderman Ken Heard
118 Sawbridge Dr
Ridgeland, MS 39157
601-201-7392

Alderman Chuck Gautier
609 Abbots Lane
Ridgeland, MS 39157
601-506-5913

Alderman Kevin Holder
216 Pine Hill Dr
Ridgeland, MS 39157
601-238-5361

Alderman Brian Ramsey
425 Friday Harbour
Ridgeland, MS 39157
601-506-1979

Alderman Bill Lee
56 Breakers Lane
Ridgeland, MS 39157
601-278-6256

Alderman Wesley Hamlin
613 Bryceland Blvd
Ridgeland, MS 39157
601-454-0353

Alderman D. I. Smith
348 Indian Gate Circle
Ridgeland, MS 39157
601-940-2710

City Attorney Jerry Mills
Pyle, Mills, Dye & Pittman
800 Avery Blvd
Suite 101
Ridgeland, MS 39157

(MUNICIPAL NAME)

Certification to Municipal Compliance Questionnaire

Year Ended September 30, 20 24

We have reviewed all questions and responses as contained in this Municipal Compliance Questionnaire for the Municipality of RIDGELAND, and, to the best of our knowledge and belief, all responses are accurate.

(City Clerk's Signature)	(Mayor's Signature)
(Date)	(Date)

Minute Book References:

Book Number _____

Page _____

(Clerk is to enter minute book references when questionnaire is accepted by board.)

the city of RIDGELAND

DATE: JANUARY 3, 2024

TO: MAYOR & BOARD OF ALDERMEN

FROM: PAULA TIERCE, CITY CLERK/HR DIRECTOR

RE: SEWER ADJUSTMENTS

The following sewer adjustments were requested and I recommend approval:

08-2906-02	704 Naylor Lane	$106.86
09-0300-03	406 Beaver Creek Dr.	$489.09
02-3525-01	425 Millett Street	$82.20
02-5395-06	202 Salem Square	$137.69
07-0222-01	220 Trace Colony Park Dr	$113.03
02-6660-01	609 Turnberry Lane	$22.60

Please feel free to contact me should you have any questions.

mailing address: p.o. box 217 • ridgeland, ms 39158
street address: 100 W. School St. • ridgeland, ms 39157
ph: 601.856.7113 • www.ridgelandms.org

Gene F. McGee, cmo - mayor • Paula W. Tierce, phr - city clerk / human resources director

board of aldermen: D.I. Smith, cmo - at-large • Ken Heard, cmo - ward 1 • Chuck Gautier, cmo - ward 2
Kevin Holder, cmo, mayor pro tempore - ward 3 • Brian P. Ramsey, cmo - ward 4 • Bill Lee - ward 5 • Wesley Hamlin, cmo - ward 6

VENDOR NUMBER	NAME	DOCKET NUMBER	COMMENT	INVOICE NUMBER	DATE	AMOUNT
01-03495	MISS DEPARTMENT OF REVENU	195290	TAG FOR FIRE DEPT	I 202412239622	12/16/2024	12.00
			TAG FOR FIRE DEPT	001-160-632	12.00	
01-61100	RIDGELAND TOURISM COMMISS	195291	TOURISM TAX	I 202412239621	12/16/2024	207,487.86
			TOURISM TAX	001-000-101	207,487.86	
					TOTAL =	207,499.86

VENDOR NUMBER	NAME	DOCKET NUMBER	COMMENT	INVOICE NUMBER	INVOICE DATE	INVOICE AMOUNT
01-03495	MISS DEPARTMENT OF REVENU	195292	NOVEMBER 2024 SALES TAX	I 202412239623	12/16/2024	6,430.78
			NOVEMBER 2024 SALES TAX	001-000-104	6.30	
			NOVEMBER 2024 SALES TAX	400-000-111	6,424.48	
					TOTAL =	6,430.78

FUND TOTALS

FUND	NAME	TOTAL
001	GENERAL FUND	207,506.16
400	PUBLIC UTILITIES FUND	6,424.48
	TOTALS FOR ALL FUNDS =	213,930.64

VENDOR NUMBER	NAME	DOCKET NUMBER	COMMENT	INVOICE NUMBER	INVOICE DATE	INVOICE AMOUNT
01-39560	M D O T	195293	MS DEVELOPMENT BANK OBLIG BOND I	202412239624	11/01/2024	509,037.43
			MS DEVELOPMENT BANK OBLIG BOND	200-450-813	384,700.00	
			MS DEVELOPMENT BANK OBLIG BOND	200-450-814	19,715.00	
			MS DEVELOPMENT BANK OBLIG BOND	200-450-815	104,622.43	
					TOTAL =	509,037.43

FUND TOTALS

FUND	NAME	TOTAL
200	G. O. BOND FUND	509,037.43
	TOTALS FOR ALL FUNDS =	509,037.43

VENDOR NUMBER	NAME	DOCKET NUMBER	COMMENT	INVOICE NUMBER	INVOICE DATE	INVOICE AMOUNT
01-02328	AMERICAN SOCIETY OF LANDS	195294	CONF REGISTRATION	I 248	12/18/2024	900.00
			CONF REGISTRATION	001-201-681	900.00	
				TOTAL =		900.00

FUND TOTALS

FUND	NAME	TOTAL
001	GENERAL FUND	900.00
	TOTALS FOR ALL FUNDS =	900.00

VENDOR NUMBER	NAME	DOCKET NUMBER	COMMENT	INVOICE NUMBER	DATE	AMOUNT
01-00465	A S A P PRINTING & COPYIN	195295	ANNIV BOOKLET	I 193617	12/23/2024	1,077.00
			BOOKLETS	001-093-615	1,077.00	
01-02960	A S C A P	195296	LICENSE RENEWAL	I 202412309628	12/20/2024	445.46
			LIC FEE ADJ	001-340-686	0.46	
			LICENSE FEE	001-340-686	426.46	
			LICENSE FEE	001-340-686	18.54	
01-00113	A-1 APPLIANCES	195297	FD - WASHER	I 182431	11/26/2024	398.00
			SERVICE CALL	001-160-637	99.00	
			LABOR	001-160-637	90.00	
			PARTS TOTAL	001-160-637	209.00	
01-01350	ADCAMP INC	195298	TRACE COLONY PARK	I 44046	12/16/2024	43,509.51
			MILLING <3000	001-201-603	6,000.00	
			SC-1A SURFACE	001-201-603	37,509.51	
01-03644	AFLAC	195299	EBQ21: DECEMBER 2024	I 431493	12/15/2024	8,064.48
			EBQ21: DECEMBER 2024	001-000-171	6,884.50	
			EBQ21: DECEMBER 2024	005-000-171	137.54	
			EBQ21: DECEMBER 2024	400-000-171	929.20	
			EBQ21: DECEMBER 2024	404-000-171	113.24	
01-05511	AMAZON CAPITAL SERVICES	195300	NAPKINS - ANNIV EVENT	I 143N-HMGG-33MF	12/19/2024	81.14
			NAPKINS	001-093-615	66.15	
			SHIPPING	001-093-615	14.99	
01-05511	AMAZON CAPITAL SERVICES	195301	CLEANING SUPPLIES	I 19V9-JD1W-K6LK	12/17/2024	164.61
			DISH SOAP	001-100-510	15.68	
			CLOROX WIIPES	001-100-510	11.75	
			LYSOL SPRAY	001-100-510	79.19	
			SHIPPING	001-100-510	10.99	
			CLOROX WIPES	001-100-510	47.00	
01-05511	AMAZON CAPITAL SERVICES	195302	CUPS FOR ANNIV EVENT	I 1D1T-4GJF-V4PY	12/27/2024	185.94
			GLASSES	001-093-615	110.97	
			FLUTES	001-093-615	63.98	
			SHIPPING	001-093-615	10.99	
01-05511	AMAZON CAPITAL SERVICES	195303	NAPKINS - ANNIV EVENT	I 1GD9-KDF1-3H47	12/19/2024	114.95
			NAPKINS	001-093-615	99.96	
			SHIPPING	001-093-615	14.99	
01-05511	AMAZON CAPITAL SERVICES	195304	CARDSTOCK	I 1LVF-VRR6-F793	12/09/2024	19.98
			PINK CARDSTOCK	001-340-650	19.98	
01-05511	AMAZON CAPITAL SERVICES	195305	OFFICE SUPPLIES	I 1P3Y-94GF-WYNP	11/01/2024	76.16
			SCOTCH PACKING TAPE	001-340-500	24.00	
			POST IT NOTES	001-340-500	17.29	
			SPRIAL NOTEBOOKS	001-340-500	18.88	
			POST IT NOTES	001-340-500	15.99	

VENDOR NUMBER	NAME	DOCKET NUMBER	COMMENT	INVOICE NUMBER	INVOICE DATE	AMOUNT
01-05511	AMAZON CAPITAL SERVICES	195306	PLANNER	I 1VTC-3R1C-9KKC	12/16/2024	23.96
			PLANNER	001-100-540	16.97	
			SHIPPING	001-100-540	6.99	
01-05511	AMAZON CAPITAL SERVICES	195307	RADIO CHARGERS & ANT	I 1Y3X-1R76-4N3Y	12/19/2024	273.87
			RADIO CHARGERS 12PC	001-100-500	239.89	
			RADIO ANTENNA 10PC	001-100-500	26.99	
			SHIPPING	001-100-500	6.99	
01-04104	ANTHROPOLOGIE INC	195308	OVERPAYMENT PRIVILEGE LICENSE	I 202412209610	12/09/2024	30.00
			OVERPAYMENT PRIVILEGE LICENSE	001-000-220	30.00	
01-06584	ANYDESK AMERICAS INC	195309	YEARLY SUBSCRIPTION	I A22041631185	12/12/2024	717.60
			STANDARD CORE LICENS	400-650-603	358.80	
			STANDARD CONNECTION	400-650-603	358.80	
01-01944	ATMOS ENERGY	195310	3013046088: 11-21-24 -12-19-24	I 202412279626	12/19/2024	652.69
			3013046088: 11-21-24 -12-19-24	001-160-630	652.69	
01-00717	BEST BUY BUSINESS ADVANTA	195311	FD - CABLE	I 8865175	12/06/2024	14.99
			12FT CABLE	001-160-540	14.99	
01-06274	GAVIN BIRD	195312	MURAL REPAIR AT WILDFLOWE	I 202412179584	12/04/2024	200.00
			MURAL REPAIR AT WILDFLOWE	001-550-599	200.00	
01-06274	GAVIN BIRD	195313	PAINT HAYBALES	I 202412179585	12/10/2024	400.00
			PAINT HAYBALES	001-340-650	400.00	
01-02670	BLAYLOCK FINE ART PHOTOGR	195314	ANNIVERSARY EVENT	I 1801	12/20/2024	750.00
			PHOTOGRAPHY	001-093-615	750.00	
01-07400	BLURTON BANKS & ASSOC. IN	195315	504 CYPRESS COVE	I 12.12.2024A	12/12/2024	3,800.00
			INSTALL 1" BORE	400-650-603	1,800.00	
			1" HDPE SERVICE LINE	400-650-603	2,000.00	
01-02311	BUFKIN MECHANICAL INC	195316	SERVICE CALLS	I 80968	12/04/2024	547.00
			PLUMBING SERVICE	001-340-637	450.00	
			PLUMBING MATERIAL	001-340-637	97.00	
01-02311	BUFKIN MECHANICAL INC	195317	TOILET REPAIR	I 81023	12/13/2024	223.00
			LABOR	001-100-637	200.00	
			MATERIAL	001-100-637	23.00	
01-02311	BUFKIN MECHANICAL INC	195318	SERVICE CALLS	I 81036	12/16/2024	200.00
			HVAC HEATING/COOLING	001-340-637	200.00	
01-02311	BUFKIN MECHANICAL INC	195319	PLUMBING SERVICE	I 81043	12/17/2024	3,600.00
			METER INSTALLATIONS	400-650-603	3,600.00	
01-08860	BULLDOG CONSTRUCTION CO I	195320	OLD TOWN CROSSING	I 5929	12/05/2024	15,419.75
			ROADBED UNDERSEAL	001-201-691	15,419.75	

VENDOR NUMBER	NAME	DOCKET NUMBER	COMMENT	INVOICE NUMBER	INVOICE DATE	INVOICE AMOUNT
01-08860	BULLDOG CONSTRUCTION CO I	195321	DINSMOR CROSSING	I 5930	12/05/2024	168,299.75
			SAWCUTTING	001-201-603	6,496.00	
			C&G LEVEL & LIFT	001-201-603	53,011.75	
			r7r EXIST C&G	001-201-603	104,832.00	
			R&R EXIST MISC CONCR	001-201-603	3,960.00	
01-08860	BULLDOG CONSTRUCTION CO I	195322	TRACE COLONY PARK DRIVE	I 5931	12/09/2024	58,853.25
			SAWCUTTING	001-201-603	3,332.00	
			C&G LEVELING & LIFT	001-201-603	12,219.25	
			R&R EXISTING CURB	001-201-603	43,302.00	
01-01096	BUSINESS COMMUNICATIONS I	195323	DELL SWITCHES SUPPORT	I 192082	12/11/2024	3,941.63
			DELL SWITCHES SUPPORT	001-010-635	162.68	
			DELL SWITCHES SUPPORT	001-020-635	34.86	
			DELL SWITCHES SUPPORT	001-042-635	209.16	
			DELL SWITCHES SUPPORT	001-080-635	23.26	
			DELL SWITCHES SUPPORT	001-100-635	2,791.07	
			DELL SWITCHES SUPPORT	001-160-635	197.54	
			DELL SWITCHES SUPPORT	001-180-635	151.06	
			DELL SWITCHES SUPPORT	001-201-635	81.41	
			DELL SWITCHES SUPPORT	001-340-635	185.92	
			DELL SWITCHES SUPPORT	400-650-635	104.67	
01-01096	BUSINESS COMMUNICATIONS I	195324	FORTINET RENEWALS	I 192286	12/23/2024	2,534.55
			FORTINET RENEWALS	001-010-635	80.50	
			FORTINET RENEWALS	001-020-635	17.22	
			FORTINET RENEWALS	001-042-635	103.50	
			FORTINET RENEWALS	001-080-635	11.48	
			FORTINET RENEWALS	001-100-635	1,833.93	
			FORTINET RENEWALS	001-160-635	229.27	
			FORTINET RENEWALS	001-180-635	74.75	
			FORTINET RENEWALS	001-201-635	40.18	
			FORTINET RENEWALS	001-340-635	92.00	
			FORTINET RENEWALS	400-650-635	51.72	
01-05106	C SPIRE BUSINESS SOLUTION	195325	APPLECARE IPHONE 14- K.HARRIS	I C025655139	12/20/2024	149.00
			APPLECARE IPHONE 14- K.HARRIS	400-650-605	149.00	
01-03826	C SPIRE WIRELESS	195326	0002596490: 11-08-24 -12-07-24	I 202412239620	12/07/2024	562.42
			0002596490: 11-08-24 -12-07-24	001-340-605	562.42	
01-01441	CAPITOL TOWING INC	195327	CID TOWING	I 15806	12/11/2024	75.00
			CID TOWING	001-100-632	75.00	
01-01441	CAPITOL TOWING INC	195328	CID TOWING	I 15807	12/11/2024	75.00
			CID TOWING	001-100-632	75.00	
01-01441	CAPITOL TOWING INC	195329	CID TOW	I 15814	12/17/2024	75.00
			CID TOW FEES	001-100-632	75.00	
01-01441	CAPITOL TOWING INC	195330	CID TOW	I 15871	12/26/2024	75.00

VENDOR NUMBER	NAME	DOCKET NUMBER	COMMENT	INVOICE NUMBER	DATE	AMOUNT	
01-01441	CAPITOL TOWING INC	195330	CID TOW	I 15871	12/26/2024	75.00	CONT
			CID TOW	001-100-632	75.00		
01-01441	CAPITOL TOWING INC	195331	CID TOW	I 15926	12/26/2024	75.00	
			CID TOW	001-100-632	75.00		
01-01136	CENTERPOINT ENERGY	195332	6402514013-4: 10-31 - 12-04-24	I 202412209594	12/09/2024	197.75	
			6402514013-4: 10-31 - 12-04-24	001-092-630	197.75		
01-01136	CENTERPOINT ENERGY	195333	3174686-0: 10-31-24 - 12-04-24	I 202412209595	12/09/2024	569.53	
			3174686-0: 10-31-24 - 12-04-24	001-201-630	569.53		
01-01136	CENTERPOINT ENERGY	195334	3194251-9: 10-31-24 - 12-04-24	I 202412209596	12/09/2024	409.84	
			3194251-9: 10-31-24 - 12-04-24	400-650-630	409.84		
01-01136	CENTERPOINT ENERGY	195335	3194248-5: 10-31-24 - 12-04-24	I 202412209597	12/09/2024	98.92	
			3194248-5: 10-31-24 - 12-04-24	001-340-630	98.92		
01-01136	CENTERPOINT ENERGY	195336	3194247-7: 10-31-24 - 12-04-24	I 202412209598	12/09/2024	254.66	
			3194247-7: 10-31-24 - 12-04-24	001-350-630	254.66		
01-01136	CENTERPOINT ENERGY	195337	3194250-1:10-31-24 - 12-04-24	I 202412209599	12/09/2024	274.06	
			3194250-1:10-31-24 - 12-04-24	400-650-630	274.06		
01-01136	CENTERPOINT ENERGY	195338	3194249-3: 10-31-24 - 12-04-24	I 202412209600	12/09/2024	171.30	
			3194249-3: 10-31-24 - 12-04-24	001-160-630	171.30		
01-01136	CENTERPOINT ENERGY	195339	3176210-7: 10-31-24 - 12-04-24	I 202412209601	12/09/2024	322.72	
			3176210-7: 10-31-24 - 12-04-24	001-160-630	322.72		
01-12050	CENTRAL PIPE SUPPLY INC	195340	CITY WIDE METER SWAP	I S100387360.001	12/10/2024	29,153.33	
			12" MAG MTR 150' CBL	467-650-760	8,345.00		
			LTE-M ENDPOINT 8" LE	467-650-760	182.88		
			REMOTE WALL COVER KI	467-650-760	13.91		
			12" FLANGE PK 1/8"	467-650-760	249.90		
			RED RUB FF GSKT 12"	467-650-760	46.56		
			12"X0'7.5" DI SPOOL	467-650-760	1,160.90		
			12" MAG METER	467-650-760	15,850.00		
			LTE EP 8" LEAD	467-650-760	365.76		
			REMOTE WALL COVER	467-650-760	23.70		
			12" FLANG PK 1/8"	467-650-760	499.80		
			RED RUB GSKT 12"	467-650-760	93.12		
			12"X0'7.5 SPOOL	467-650-760	2,321.80		
01-12050	CENTRAL PIPE SUPPLY INC	195341	5' CURB INLET	I S100391450.001	12/09/2024	2,231.88	
			5' CURB INLET	001-201-575	2,231.88		
01-12050	CENTRAL PIPE SUPPLY INC	195342	5' CURB INLET	I S100396362.001	12/09/2024	447.00	
			2" CTS TUBING	400-650-575	447.00		
01-12050	CENTRAL PIPE SUPPLY INC	195343	5' CURB INLET	I S100396438.001	12/09/2024	1,859.10	
			6" VALVE	400-650-575	1,642.90		

VENDOR NUMBER	NAME	DOCKET NUMBER	COMMENT	INVOICE NUMBER	DATE	AMOUNT	
01-12050	CENTRAL PIPE SUPPLY INC	195343	5' CURB INLET	I S100396438.001	12/09/2024	1,859.10	CONT
			6" MJ PACK	400-650-575	109.20		
			6" GLAND	400-650-575	107.00		
01-12050	CENTRAL PIPE SUPPLY INC	195344	DI PARTS FOR C-STORE	I S100397196.001	12/16/2024	1,867.24	
			8" DI MJ 90	400-650-760	168.15		
			12"- 11DEG. ELBOW	400-650-760	435.20		
			8" FOSTER ADAPTER	400-650-760	688.29		
			12" MEGA LUGS	400-650-760	393.60		
			12" MJ BOLT PACK	400-650-760	182.00		
01-13025	CINTAS CORPORATION LOC #2	195345	PAYER #14850389	I 05178917	10/04/2024	717.60	
			PAYER #14850389	001-201-535	358.80		
			PAYER #14850389	400-650-535	358.80		
01-13025	CINTAS CORPORATION LOC #2	195346	PAYER #14850389	I 15075715	12/18/2024	35.75	
			PAYER #14850389	400-650-540	35.75		
01-13025	CINTAS CORPORATION LOC #2	195347	PAYER #14849134	I 15075931	12/18/2024	198.09	
			PAYER #14849134	400-650-535	187.35		
			PAYER #14849134	404-650-535	10.74		
01-13025	CINTAS CORPORATION LOC #2	195348	PAYER #14849134	I 15075972	12/18/2024	195.65	
			PAYER #14849134	001-201-535	195.65		
01-13025	CINTAS CORPORATION LOC #2	195349	PAYER #14850389	I 15722877	12/24/2024	35.75	
			PAYER #14850389	400-650-540	35.75		
01-13025	CINTAS CORPORATION LOC #2	195350	PAYER #14849134	I 15723149	12/24/2024	184.42	
			PAYER #14849134	001-201-535	184.42		
01-13025	CINTAS CORPORATION LOC #2	195351	PAYER #14849134	I 15723294	12/24/2024	198.09	
			PAYER #14849134	400-650-535	187.35		
			PAYER #14849134	404-650-535	10.74		
01-13025	CINTAS CORPORATION LOC #2	195352	PAYER #14850389	I 16416199	12/31/2024	35.75	
			PAYER #14850389	400-650-540	35.75		
01-13025	CINTAS CORPORATION LOC #2	195353	PAYER #14849134	I 16416643	12/31/2024	185.00	
			PAYER #14849134	001-201-535	185.00		
01-13025	CINTAS CORPORATION LOC #2	195354	PAYER #14849134	I 16416652	12/31/2024	197.93	
			PAYER #14849134	400-650-535	187.45		
			PAYER #14849134	404-650-535	10.48		
01-13601	CLARION LEDGER - SUBSCRIP	195355	CL6284182: 12-01-24 - 12-31-24	I 202412239618	12/23/2024	52.99	
			CL6284182: 12-01-24 - 12-31-24	001-040-686	52.99		
01-00503	COLONIAL HEIGHTS BAPTIST	195356	BOND REFUND LESS OT 5K FUN RUN	I 202412209612	11/09/2024	311.24	
			BOND REFUND LESS OT 5K FUN RUN	001-000-119	311.24		
01-02440	COMCAST CABLE	195357	8396410530435482: 12-18 -01-17	I 202412319636	12/14/2024	118.71	

VENDOR NUMBER	NAME	DOCKET NUMBER	COMMENT	INVOICE NUMBER	DATE	AMOUNT	
01-02440	COMCAST CABLE	195357	8396410530435482: 12-18 -01-17	I 202412319636	12/14/2024	118.71	CONT
			8396410530435482: 12-18 -01-17	001-160-604	118.71		
01-15000	CONSOLIDATED PIPE & SUPPL	195358	AQUAPHALT 6.0	I MS0047363	12/09/2024	1,080.00	
			AQUAPHALT 6.0	001-201-575	1,080.00		
01-15000	CONSOLIDATED PIPE & SUPPL	195359	AQUAPHALT 6.0	I MS0047410	12/11/2024	540.00	
			AQUAPHALT 6.0	001-201-575	540.00		
01-15000	CONSOLIDATED PIPE & SUPPL	195360	AQUAPHALT 6.0	I MS0047441	12/13/2024	2,555.00	
			FIRE HYDRANT	400-650-575	2,555.00		
01-15000	CONSOLIDATED PIPE & SUPPL	195361	AQUAPHALT 6.0	I MS0047472	12/16/2024	100.00	
			2" FLANGE KIT	400-650-575	40.00		
			2" FLANGE	400-650-575	60.00		
01-15540	COPPER SCULPTURES INC	195362	BUTTERFLY SCULPTURE	I 0072396-IN	12/13/2024	928.00	
			BUTTERFLY SCULPTURE	001-550-599	928.00		
01-06857	DENNIS CRANFORD	195363	LIVE PIANO MUSIC FOR EVENT	I 202501029637	12/29/2024	250.00	
			LIVE PIANO MUSIC FOR EVENT	001-093-615	250.00		
01-00876	D L T SOLUTIONS LLC	195364	ANNUAL SUBSCRIPTION	I SI679187	12/20/2024	1,281.90	
			AE&C COLLECTION	001-201-635	1,281.90		
01-02332	DAL TILE DISTRIBUTION INC	195365	OVERPAYMENT PRIVILEGE LICENSE	I 202412209608	12/20/2024	11.87	
			OVERPAYMENT PRIVILEGE LICENSE	001-000-220	11.87		
01-06850	DAYS INN & SUITES	195366	OVERPAYMENT PRIVILEGE LICENSE	I 202412209604	12/20/2024	6.75	
			OVERPAYMENT PRIVILEGE LICENSE	001-000-220	6.75		
01-03638	DELTA DENTAL INSURANCE CO	195367	25-1536700000: JANUARY 2025	I BE006377471	1/01/2025	12,294.18	
			25-1536700000: JANUARY 2025	001-010-480	273.51		
			25-1536700000: JANUARY 2025	001-020-480	273.51		
			25-1536700000: JANUARY 2025	001-040-480	243.12		
			25-1536700000: JANUARY 2025	001-040-480	30.39		
			25-1536700000: JANUARY 2025	001-092-480	30.39		
			25-1536700000: JANUARY 2025	001-100-480	2,248.86		
			25-1536700000: JANUARY 2025	001-100-480	30.39		
			25-1536700000: JANUARY 2025	001-160-480	1,853.79		
			25-1536700000: JANUARY 2025	001-180-480	334.29		
			25-1536700000: JANUARY 2025	001-201-480	972.48		
			25-1536700000: JANUARY 2025	001-340-480	425.46		
			25-1536700000: JANUARY 2025	005-101-480	30.39		
			25-1536700000: JANUARY 2025	400-650-480	759.75		
			25-1536700000: JANUARY 2025	404-650-480	60.78		
			25-1536700000: JANUARY 2025	001-000-170	4,260.44		
			25-1536700000: JANUARY 2025	005-000-170	0.00		
			25-1536700000: JANUARY 2025	400-000-170	394.46		
			25-1536700000: JANUARY 2025	404-000-170	72.17		
01-18150	DELTA MUFFLER & AUTO REPA	195368	P385 FAN REPLACEMENT	I 3267	11/04/2024	87.50	

VENDOR NUMBER	NAME	DOCKET NUMBER	COMMENT	INVOICE NUMBER	DATE	AMOUNT	
01-18150	DELTA MUFFLER & AUTO REPA	195368	P385 FAN REPLACEMENT	I 3267	11/04/2024	87.50	CONT
			LABOR	001-100-632	87.50		
01-18150	DELTA MUFFLER & AUTO REPA	195369	ENGINE SWAP P362	I 3307	12/17/2024	1,600.00	
			LABOR	001-100-632	1,600.00		
01-06428	ELAN FINANCIAL SERVICES	195370	BILLIING 11-19-24 - 12-17-24	I 202412309630	12/17/2024	1,757.27	
			BILLIING 11-19-24 - 12-17-24	001-100-610	1,235.75		
			BILLIING 11-19-24 - 12-17-24	001-180-610	521.52		
01-03711	EMERGENCY EQUIPMENT PROFE	195371	FD - EQUIP REPAIRS	I 509545	11/30/2024	261.00	
			SCOTT NOZZLE O-RING	001-160-635	27.30		
			NIPPLE SEAL GASKET	001-160-635	31.20		
			SERVICE LABOR	001-160-635	135.00		
			MILEAGE	001-160-635	67.50		
01-03711	EMERGENCY EQUIPMENT PROFE	195372	FD - ENGINE 3	I 510144	12/18/2024	1,528.82	
			BELLOWS, EXH 4"	001-160-632	698.09		
			GASKET EXHAUST MARMO	001-160-632	88.52		
			SOLENOID, FAN, AIR	001-160-632	197.21		
			CUSTOMER LABOR	001-160-632	495.00		
			SHOP SUPPLIES	001-160-632	25.00		
			FREIGHT	001-160-632	25.00		
01-01142	EMERGENCY EQUIPMENT SERVI	195373	FD - REBUIL FOR LADDER 4	I 7195	12/10/2024	27,678.68	
			REBUILD GEAR BOX	001-160-632	6,800.00		
			ANNUAL PUMP TEST	001-160-632	350.00		
			HALE BEARING AND SEA	001-160-632	1,796.32		
			HALE GASKET KIT	001-160-632	130.38		
			QSMG IMP ASSY	001-160-632	10,791.00		
			FORK REPLACEMENT	001-160-632	399.33		
			G SLIDING GEAR	001-160-632	1,685.90		
			INTERMEDIATE GEAR	001-160-632	2,041.56		
			FREIGHT	001-160-632	125.00		
			INPUT SHAFT	001-160-632	3,409.19		
			LABOR INSTALL SHAFT	001-160-632	150.00		
01-21500	ENTERGY	195374	14870992	I 202412209603	12/03/2024	4,827.93	
			14870992	001-340-630	4,827.93		
01-21506	ENTERGY	195375	19579978: 10-29-24 - 11-27-24	I 202412209602	12/09/2024	55.52	
			19579978: 10-29-24 - 11-27-24	001-340-630	55.52		
01-21506	ENTERGY	195376	111753950: 11-05-24 - 12-04-24	I 202412279627	12/10/2024	315.25	
			111753950: 11-05-24 - 12-04-24	001-201-684	315.25		
01-02231	EWING IRRIGATION PRODUCTS	195377	IRRIGATION REPAIR	I 24447599	12/12/2024	275.59	
			EMPRO SURFACTANT	001-340-575	216.69		
			L/P DBR/Y	001-340-575	58.90		
01-02231	EWING IRRIGATION PRODUCTS	195378	TRENCH SHOVELS	I 24522814	12/20/2024	43.98	
			4IN DIGGING TRENCH	001-340-540	43.98		

VENDOR NUMBER	NAME	DOCKET NUMBER	COMMENT	INVOICE NUMBER	INVOICE DATE	AMOUNT
01-00475	FIRE EQUIPMENT SERVICES L	195379	FD - ENGINE RESERVE	I 4502	12/16/2024	914.81
			SERVICE CALL	001-160-637	100.00	
			SWITCH CAP START	001-160-637	21.59	
			SWITCH DP ON/OFF	001-160-637	53.72	
			VALVE KIT 3 INCH	001-160-637	470.00	
			LABOR MECHANIC	001-160-637	269.50	
01-00595	FLEET PRIDE	195380	KNUCKLE BOOM PARTS	I 122156878	12/16/2024	317.93
			BRAKE VALVE	001-201-632	279.59	
			3/8 UNION	001-201-632	19.78	
			3/8x1/4 PUSH CONNECT	001-201-632	8.98	
			1/2x3/8 PUSH CONNECT	001-201-632	9.58	
01-00595	FLEET PRIDE	195381	KNUCKLE BOOM PARTS	I 122167825	12/17/2024	33.53
			PUSH-ON MALE CONN	001-201-632	33.53	
01-23750	FORESTRY SUPPLIERS INC	195382	43144 MAGNETIC LOCATOR	I 629880-00	12/09/2024	639.00
			43144 MAGNETIC LOCATOR	400-650-540	639.00	
01-23750	FORESTRY SUPPLIERS INC	195383	43144 MAGNETIC LOCATOR	I 630958-00	12/11/2024	352.26
			33266 8LB. SLEDGE HA	001-201-540	81.90	
			93127 2GAL. GAS CAN	001-201-540	232.86	
			93138 GAS CAN FUNNEL	001-201-540	37.50	
01-23750	FORESTRY SUPPLIERS INC	195384	43144 MAGNETIC LOCATOR	I 631643-00	12/13/2024	386.00
			17161 ROUND UP	001-201-575	386.00	
01-23750	FORESTRY SUPPLIERS INC	195385	SHOVELS	I 632756-00	12/17/2024	607.05
			33819 LH RP SHOVEL	001-201-540	143.80	
			33882 LH FP SHOVEL	001-201-540	141.75	
			69108 LH SS SHOVEL	400-650-540	142.50	
			69113 DH SS SHOVEL	400-650-540	179.00	
01-24500	FUELMAN OF MS-#127779	195386	127779: 12-09-24 - 12-15-24	I NP67606674	12/16/2024	19.89
			127779: 12-09-24 - 12-15-24	001-092-525	19.89	
01-24500	FUELMAN OF MS-#127779	195387	127779: 12-16-24 - 12-22-24	I NP67630551	12/23/2024	30.14
			127779: 12-16-24 - 12-22-24	001-092-525	30.14	
01-01867	FUELMAN OF MS-#127780	195388	127780: 12-09-24 - 12-15-24	I NP67606675	12/16/2024	2,211.02
			127780: 12-09-24 - 12-15-24	001-201-525	1,393.86	
			127780: 12-09-24 - 12-15-24	400-650-525	817.16	
01-01867	FUELMAN OF MS-#127780	195389	127780: 12-16-24 - 12-22-24	I NP67630552	12/23/2024	1,831.42
			127780: 12-16-24 - 12-22-24	001-201-525	866.90	
			127780: 12-16-24 - 12-22-24	400-650-525	860.68	
			127780: 12-16-24 - 12-22-24	404-650-525	103.84	
01-01867	FUELMAN OF MS-#127780	195390	127780: 12-23-24 - 12-29-24	I NP67658033	12/30/2024	1,047.20
			127780: 12-23-24 - 12-29-24	001-201-525	624.54	
			127780: 12-23-24 - 12-29-24	400-650-525	422.66	

VENDOR NUMBER	NAME	DOCKET NUMBER	COMMENT	INVOICE NUMBER	DATE	AMOUNT
01-01868	FUELMAN OF MS-#127781	195391	127781: 12-09-24 - 12-15-24	I NP67606676	12/16/2024	517.56
			127781: 12-09-24 - 12-15-24	001-160-525	517.56	
01-01868	FUELMAN OF MS-#127781	195392	127781: 12-16-24 - 12-22-24	I NP67630553	12/23/2024	525.95
			127781: 12-16-24 - 12-22-24	001-160-525	525.95	
01-01869	FUELMAN OF MS-#127782	195393	127782: 12-09-24 - 12-15-24	I NP67606677	12/16/2024	61.36
			127782: 12-09-24 - 12-15-24	001-180-525	61.36	
01-01869	FUELMAN OF MS-#127782	195394	127782: 12-16-24 - 12-22-24	I NP67630554	12/23/2024	168.30
			127782: 12-16-24 - 12-22-24	001-180-525	168.30	
01-01870	FUELMAN OF MS-#127783	195395	127783: 12-09-24 - 12-15-24	I NP67606678	12/16/2024	3,360.40
			127783: 12-09-24 - 12-15-24	001-100-525	3,360.40	
01-01870	FUELMAN OF MS-#127783	195396	127783: 12-16-24 - 12-22-24	I NP67630555	12/23/2024	3,192.70
			127783: 12-16-24 - 12-22-24	001-100-525	3,192.70	
01-01871	FUELMAN OF MS-#127785	195397	127785: 12-16-24 - 12-22-24	I NP67630556	12/23/2024	126.70
			127785: 12-16-24 - 12-22-24	001-340-525	126.70	
01-06707	FUSIONSITE LLC	195398	PORTAJOHN RENTAL	I 103350E	12/05/2024	574.00
			NICE SPEC TOILET	001-340-650	99.00	
			HANDICAP COMPLIANT	001-340-650	300.00	
			HAND SANITIZING	001-340-650	75.00	
			DELIVERY	001-340-650	50.00	
			PICKUP	001-340-650	50.00	
01-06707	FUSIONSITE LLC	195399	PORTAJOHN RENTAL	I 103351E	12/06/2024	574.00
			SP EVENT UNIT	001-340-650	99.00	
			ADA COMPLIANT UNIT	001-340-650	300.00	
			HAND SANITIZING	001-340-650	75.00	
			DELIVERY	001-340-650	50.00	
			PICKUP	001-340-650	50.00	
01-06838	GALLERIES LLC	195400	GOLD COIN TOPPERS	I 202412179583	12/27/2024	105.00
			GOLD COIN TOPPERS	001-093-615	105.00	
01-24935	GATEWAY TIRE & SERVICE CE	195401	NEW TIRE	I 6504-197207	12/18/2024	218.44
			NEW TIRE	001-180-632	189.44	
			LABOR	001-180-632	28.00	
			WASTE DISPOSAL	001-180-632	1.00	
01-00565	GEORGE'S DOOR SERVICE INC	195402	FD - BAY 4 CENTRAL	I 051726	10/15/2024	187.00
			LABOR AND MATERIALS	001-160-637	187.00	
01-04038	GILMORE TOWING & RECOVERY	195403	TOW KUBOTA TRACTOR	I 202412209613	12/09/2024	150.00
			TOW KUBOTA TRACTOR	001-201-635	150.00	
01-26200	GRAINGER W W INC	195404	BEARING	C 9347217516	12/16/2024	110.05CR
			CREDIT BUTTON CONTRO	400-650-632	110.05CR	

VENDOR NUMBER	NAME	DOCKET NUMBER	COMMENT	INVOICE NUMBER	INVOICE DATE	AMOUNT
01-26200	GRAINGER W W INC	195405	FD - SUPPLIES	I 9339971021	12/09/2024	146.34
			PORTABLE PT TRANSPOR	001-160-540	146.34	
01-26200	GRAINGER W W INC	195406	BEARING	I 9340940064	12/10/2024	28.23
			BEARING	001-201-635	28.23	
01-26200	GRAINGER W W INC	195407	BEARING	I 9340940072	12/10/2024	386.01
			POWER CONNECTOR	400-650-632	42.20	
			BATTERY CABLE RED	400-650-632	105.39	
			BATTERY CABLR BLACK	400-650-632	105.39	
			CIRCUIT BREAKER	400-650-632	77.33	
			BATTERY LUGS 2/0	400-650-632	55.70	
01-26200	GRAINGER W W INC	195408	BEARING	I 9346592083	12/13/2024	110.05
			2 BUTTON CONTROL	400-650-632	110.05	
01-26200	GRAINGER W W INC	195409	BEARING	I 9347672843	12/16/2024	156.64
			DUMP TRAILER CONTROL	001-201-635	156.64	
01-26200	GRAINGER W W INC	195410	BEARING	I 9350952819	12/18/2024	33.74
			3WJC8 PEPTO BISMOL	400-650-540	23.77	
			483T94 SINUS RELIVER	400-650-540	3.55	
			36LF44 ANTISEPTIC WI	400-650-540	6.42	
01-00644	GREEN EARTH PRODUCTS	195411	TUFF TOWELS	I 51290	12/16/2024	362.40
			TUFF TOWELS	400-650-540	362.40	
01-05380	GREEN OAK GARDEN CENTER L	195412	CHRISTMAS 2024	I 25810	11/23/2024	59,508.99
			CHRISTMAS 2024	001-092-637	59,508.99	
01-05380	GREEN OAK GARDEN CENTER L	195413	ANNIVERSARY EVENT DECOR	I 26072	12/17/2024	4,646.50
			LIVE FLORAL ARRANGEM	001-093-615	50.00	
			LRG BATTERY CANDLES	001-093-615	299.00	
			MED BATTERY CANDLES	001-093-615	227.50	
			LARGE ARRANGEMENT	001-093-615	855.00	
			CAKE FLOWERS	001-093-615	50.00	
			SMALL ARRANGEMENT	001-093-615	375.00	
			RENTAL ITEMS	001-093-615	350.00	
			TABLES AND CYLINDERS	001-093-615	50.00	
			LIT BRANCHES OUTSIDE	001-093-615	350.00	
			INSTALL AND REMOVAL	001-093-615	1,500.00	
			PECAN TREES LIGHTED	001-093-615	240.00	
			ASSORTED PLANTS	001-093-615	300.00	
01-05380	GREEN OAK GARDEN CENTER L	195414	PLANT MAINTENANCE	I 26163	12/20/2024	283.29
			PD PLANT MAINTENANCE	001-100-604	283.29	
01-05380	GREEN OAK GARDEN CENTER L	195415	JAN 2025 - CH	I 26275	12/20/2024	150.00
			PLANT MAINT	001-092-637	150.00	
01-06842	HAROLD HEAD	195416	OVERPAYMENT PRIVILEGE LICENSE	I 202412179587	12/17/2024	20.00

VENDOR NUMBER	NAME	DOCKET NUMBER	COMMENT	INVOICE NUMBER	DATE	AMOUNT	
01-06842	HAROLD HEAD	195416	OVERPAYMENT PRIVILEGE LICENSE	I 202412179587	12/17/2024	20.00	CONT
			OVERPAYMENT PRIVILEGE LICENSE	001-000-220	20.00		
01-04997	HARTLEY EQUIPMENT COMPANY	195417	PARTS FOR EQUIPMENT	I 280435	12/04/2024	24.41	
			CHAIN ADJUSTER	001-201-635	17.52		
			TENSIONER SLIDE	001-201-635	6.89		
01-04997	HARTLEY EQUIPMENT COMPANY	195418	PARTS FOR EQUIPMENT	I 280776	12/10/2024	186.33	
			CASTER KIT	001-201-635	162.99		
			BEARING-CONE	001-201-635	19.34		
			FREIGHT	001-201-635	4.00		
01-04997	HARTLEY EQUIPMENT COMPANY	195419	PARTS FOR EQUIPMENT	I 280786	12/10/2024	14.70	
			CUP BEARING	001-201-635	14.70		
01-06346	HOLCIM-MAMR INC	195420	LIMESTONE #57	I 720593296	12/09/2024	996.19	
			LIMESTONE #57	400-650-575	739.44		
			FREIGHT	400-650-575	256.75		
01-04622	SALLY M HOLLY	195421	DECEMBER 2024 SERVICES	I 202412239614	12/23/2024	900.00	
			DECEMBER 2024 SERVICES	001-340-690	900.00		
01-30599	HOLMES COMM COLLEGE	195422	TUITION FOR B. DRAKE -FALL 24	I 002G	12/17/2024	1,920.00	
			TUITION FOR B. DRAKE -FALL 24	001-080-681	1,920.00		
01-01132	HOME DEPOT CREDIT SERVICE	195423	85-368 MODULAR PLUG	C 0223383	12/12/2024	21.47CR	
			1/4"X5" CREDIT	001-201-575	21.47CR		
01-01132	HOME DEPOT CREDIT SERVICE	195424	85-368 MODULAR PLUG	I 0031576	12/12/2024	19.97	
			1/4"X 3 3/4" ANCHOR	001-201-575	19.97		
01-01132	HOME DEPOT CREDIT SERVICE	195425	85-368 MODULAR PLUG	I 0042256	12/12/2024	37.41	
			1/4"X5" CONCRETE ANC	001-201-575	21.47		
			3/16"X5 1/2" DRILL B	001-201-575	15.94		
01-01132	HOME DEPOT CREDIT SERVICE	195426	85-368 MODULAR PLUG	I 2031497	12/10/2024	79.94	
			85-368 MODULAR PLUG	001-201-575	79.94		
01-01132	HOME DEPOT CREDIT SERVICE	195427	FD - SUPPLIES	I 5512300	12/17/2024	16.55	
			PVC BALL VALVE	001-160-540	11.86		
			PVC BUSHING	001-160-540	4.69		
01-01616	HOMECARE PLUS INC	195428	4320-4 NITRILE GLOVES XL	I 00003163	12/17/2024	417.00	
			4320-4 NITRILE GLOVES XL	400-650-540	417.00		
01-31475	HUTTO'S	195429	ST. AUGUSTINE SOD	I 592352	12/09/2024	350.00	
			ST. AUGUSTINE SOD	400-650-575	350.00		
01-31870	I M S A	195430	MEMBERSHIP DUES	I 202412309631	11/05/2024	100.00	
			MEMBERSHIP DUES	001-201-686	100.00		
01-31870	I M S A	195431	MEMBERSHIP DUES	I 202412309632	11/05/2024	100.00	

VENDOR NUMBER	NAME	DOCKET NUMBER	COMMENT	INVOICE NUMBER	DATE	AMOUNT	CONT
01-31870	I M S A	195431	MEMBERSHIP DUES	I 202412309632	11/05/2024	100.00	CONT
			MEMBERSHIP DUES	001-201-686	100.00		
01-00905	INTERSTATE ALL BATTERY CE	195432	FD- BATTERY	I 01041291	12/10/2024	197.90	
			BATTERY FOR RESCUE	001-160-632	172.95		
			INSTALLED	001-160-632	24.95		
01-00905	INTERSTATE ALL BATTERY CE	195433	FD -BATTERIES	I 02055158	12/17/2024	77.94	
			FD-BATTERIES	001-160-540	77.94		
01-00905	INTERSTATE ALL BATTERY CE	195434	FD - SUPPLIES	I 02055168	12/17/2024	164.90	
			BATTERY LADDER 4	001-160-632	139.95		
			INSTALL	001-160-632	24.95		
01-00905	INTERSTATE ALL BATTERY CE	195435	BATTERY STOCK	I 02055192	12/20/2024	179.74	
			AA BATTERY	001-100-540	9.99		
			AAA BATTERY	001-100-540	9.99		
			CR123A BATTERY	001-100-540	71.76		
			LIT 2032 BATTERY	001-100-540	88.00		
01-01495	IRON INNOVATIONS INC	195436	LOOPS DINSMOR GATES	I 32688	12/19/2024	4,610.74	
			LOOPS DINSMOR GATES	001-201-603	4,610.74		
01-05696	J.L. ROBERTS MECHANICAL C	195437	SERVICE CALL - CH	I SD4341	11/20/2024	140.00	
			TECH RATE	001-092-637	130.00		
			TRIP CHARGE	001-092-637	10.00		
01-33385	JACKSON DATA PRODUCTS IN	195438	PW REG/WINDOW ENVELOPES	I INV45219	12/19/2024	368.29	
			#10 REG ENVELOPE	001-201-540	269.77		
			PW REG/WINDOW ENVELOPES	400-650-540	98.52		
01-33800	JACKSON PAPER COMPANY	195439	FD - SUPPLIES ST. 1	I 1395474	10/14/2024	145.25	
			FLOOR CLEANING	001-160-510	120.86		
			PAPER TOWELS	001-160-510	24.39		
01-33800	JACKSON PAPER COMPANY	195440	FD - AUTO WASH	I 1400290	11/27/2024	172.23	
			FD - AUTO WASH	001-160-510	172.23		
01-33800	JACKSON PAPER COMPANY	195441	CITATION FLOOR FINISH	I 1400895	12/09/2024	611.89	
			CITATION FLOOR FINISH	400-650-510	539.68		
			24OZ RAYON MOP HEAD	400-650-510	22.06		
			DEFOAMER 4/1	400-650-510	50.15		
01-33800	JACKSON PAPER COMPANY	195442	FD- FLOOR CLEANER	I 1401357	12/12/2024	268.86	
			ECO 31 PH FLOOR CLEA	001-160-510	120.86		
			ECO 23 NEUTRAL DISIN	001-160-510	148.00		
01-33800	JACKSON PAPER COMPANY	195443	HAND SOAP - CH	I 1401616	12/16/2024	106.54	
			HAND SOAP	001-092-510	106.54		
01-33800	JACKSON PAPER COMPANY	195444	FD - SUPPLIES	I 1402424	12/23/2024	80.52	
			PAPER TOWELS	001-160-510	48.78		

VENDOR NUMBER	NAME	DOCKET NUMBER	COMMENT	INVOICE NUMBER	DATE	AMOUNT	
01-33800	JACKSON PAPER COMPANY	195444	FD - SUPPLIES	I 1402424	12/23/2024	80.52	CONT
			TORK ROLL	001-160-510	31.74		
01-33800	JACKSON PAPER COMPANY	195445	JANITIORIAL SUPPLIES	I 1402441	12/23/2024	315.98	
			CENTER PULL TOWELS	001-201-510	252.96		
			TOILET TISSUE	001-201-510	63.02		
01-33800	JACKSON PAPER COMPANY	195446	FD-SUPPLIES	I 1402539	12/24/2024	196.54	
			PAPER TOWELS	001-160-510	73.17		
			TORK ROLL	001-160-510	31.74		
			BATH TISSUE	001-160-510	39.50		
			MOP HANDLE	001-160-510	52.13		
01-06853	JAMES F WHEATLEY OFFICE	195447	OVERPAYMENT PRIVILEGE LICENSE	I 202412209607	12/20/2024	40.20	
			OVERPAYMENT PRIVILEGE LICENSE	001-000-220	40.20		
01-06015	JP MIDSOUTH CLEANING SYST	195448	JANITORIAL SERVICE: JAN 2025	I 223387	1/01/2025	1,520.00	
			JANITORIAL SERVICE: JAN 2025	001-092-636	1,520.00		
01-06767	LA GRANGE WORKWEAR	195449	SHIRTS	I 5095	12/06/2024	1,460.83	
			MISC GARMENTS	001-180-535	1,255.26		
			EMBROIDERY	001-180-535	110.00		
			SHIPPING & HANDLING	001-180-535	95.57		
01-06767	LA GRANGE WORKWEAR	195450	SHIRTS	I 5115	12/18/2024	372.25	
			MISC GARMENTS	001-180-535	309.40		
			EMBROIDERY	001-180-535	38.50		
			SHIPPING & HANDLING	001-180-535	24.35		
01-04561	LAMPTON LOVE GAS COMPANY	195451	SITE 57 PROPANE	I 4271875	12/16/2024	268.45	
			REGULATORY FEE	001-100-525	255.95		
			SITE 57 PROPANE	001-100-525	12.50		
01-06840	LANDRUM PIANO	195452	PIANO RENTAL	I MC0608	12/17/2024	700.00	
			PIANO RENTAL	001-093-615	700.00		
01-02334	RITA LATHAM	195453	DECEMBER 2024 SERVICES	I 202412239615	12/23/2024	270.00	
			DECEMBER 2024 SERVICES	001-340-690	270.00		
01-06856	ORSON LEASON	195454	BARTENDERS FOR EVENT	I 00127	12/29/2024	525.00	
			BARTENDERS FOR EVENT	001-093-615	525.00		
01-02576	LINCOLN NATIONAL LIFE INS	195455	ACCT 502251: JANUARY 2025	I 202412319634	12/10/2024	5,568.75	
			ACCT 502251: JANUARY 2025	001-010-480	193.35		
			ACCT 502251: JANUARY 2025	001-020-480	51.00		
			ACCT 502251: JANUARY 2025	001-040-480	172.51		
			ACCT 502251: JANUARY 2025	001-040-480	25.50		
			ACCT 502251: JANUARY 2025	001-092-480	19.43		
			ACCT 502251: JANUARY 2025	001-040-480	25.50		
			ACCT 502251: JANUARY 2025	001-100-480	1,711.85		
			ACCT 502251: JANUARY 2025	001-160-480	1,511.32		
			ACCT 502251: JANUARY 2025	001-180-480	266.32		

VENDOR NUMBER	NAME	DOCKET NUMBER	COMMENT	INVOICE NUMBER	DATE	AMOUNT	
01-02576	LINCOLN NATIONAL LIFE INS	195455	ACCT 502251: JANUARY 2025	I 202412319634	12/10/2024	5,568.75	CONT
			ACCT 502251: JANUARY 2025	001-201-480	665.91		
			ACCT 502251: JANUARY 2025	001-340-480	306.51		
			ACCT 502251: JANUARY 2025	005-101-480	25.50		
			ACCT 502251: JANUARY 2025	400-650-480	555.65		
			ACCT 502251: JANUARY 2025	404-650-480	38.40		
01-06112	LNL WORKS	195456	BRAKE REPAIR	I 12627	12/20/2024	2,828.80	
			SHOP SUPPLIES	001-201-632	15.00		
			SLACK ADJUSTERS(R)	001-201-632	304.84		
			SLACK ADJUSTERS(L)	001-201-632	304.84		
			REAR BRAKE SHOES	001-201-632	163.44		
			BRAKE CHAMBERS	001-201-632	617.80		
			BRAKE DRUMS	001-201-632	302.38		
			LABOR	001-201-632	1,120.50		
01-06112	LNL WORKS	195457	DIAGNOSTIC	I 12633	12/23/2024	6,598.22	
			SHOP SUPPLIES	001-201-632	15.00		
			FUEL INJECTORS	001-201-632	3,397.98		
			ICP SENSOR	001-201-632	189.92		
			INJECTORS LABOR	001-201-632	1,350.00		
			OIL FILTER	001-201-632	53.34		
			FUEL FILTER	001-201-632	25.97		
			FUEL FILTER	001-201-632	75.67		
			OIL (QT)	001-201-632	172.16		
			COOLANT(GAL)	001-201-632	100.76		
			VALVE COVER	001-201-632	383.10		
			OIL & FUEL FILTER LA	001-201-632	121.50		
			EGR COOLER HOSE	001-201-632	125.59		
			COOLANT HOSE	001-201-632	20.23		
			COOLANT HOSE LABOR	001-201-632	567.00		
01-02031	LOWE'S BUSINESS ACCOUNT	195458	SOLAR LIGHTS WILD FLOWER	I 84178	12/19/2024	175.49	
			SOLAR LIGHTS	001-550-599	27.88		
			10 L BLK TIER SOLAR	001-550-599	91.85		
			3.0 GAL AZALEA ENCOR	001-550-599	55.76		
01-02031	LOWE'S BUSINESS ACCOUNT	195459	MAINTENANCE SUPPLIES	I 84182	12/19/2024	210.87	
			PS M FGL BOW RAKE	001-340-540	13.93		
			CRAFTMN WD DIG SHOVE	001-340-540	46.46		
			BENGAL 2X FIRE ANT	001-340-540	150.48		
01-06156	MADISON CLEANING SERVICES	195460	MONTHLY JANITORIAL	I 441	12/09/2024	625.00	
			MONTHLY JANITORIAL	001-340-604	625.00		
01-01566	MADISON COUNTY CIRCUIT CO	195461	ELECTION SUPPORT SERVICES	I 202412239619	12/10/2024	3,000.00	
			ELECTION SUPPORT SERVICES	001-030-607	3,000.00		
01-40750	MADISON COUNTY COOPERATIV	195462	BRUSH AND STUMP KILLER	I 902969	12/13/2024	167.60	
			BRUSH AND STUMP KILLER	001-201-575	167.60		
01-41100	MADISON COUNTY SHERIFF'S	195463	NOVEMBER 2024 HOUSING	I R-1124	12/02/2024	6,594.00	

VENDOR NUMBER	NAME	DOCKET NUMBER	COMMENT	INVOICE NUMBER	DATE	AMOUNT	
01-41100	MADISON COUNTY SHERIFF'S	195463	NOVEMBER 2024 HOUSING	I R-1124	12/02/2024	6,594.00	CONT
			NOVEMBER 2024 HOUSING	001-100-687	6,594.00		
01-41100	MADISON COUNTY SHERIFF'S	195464	NOVEMBER 2024 MEDICAL	I R-M1124	12/19/2024	145.11	
			NOVEMBER 2024 MEDICAL	001-100-687	145.11		
01-01078	MADISON COUNTY WASTEWATER	195465	BBWTF EXPANSION: JAN 2025	I 5550	11/29/2024	5,809.84	
			BBWTF EXPANSION: JAN 2025	400-650-846	5,809.84		
01-01078	MADISON COUNTY WASTEWATER	195466	BOZEMAN RD: JANUARY 2025	I 5551	11/29/2024	1,832.14	
			BOZEMAN RD: JANUARY 2025	400-650-848	1,832.14		
01-01078	MADISON COUNTY WASTEWATER	195467	PARKWAY EAST: JANUARY 2025	I 5552	11/29/2024	2,021.54	
			PARKWAY EAST: JANUARY 2025	400-650-845	2,021.54		
01-03554	MADISON SOUTH RUBBISH LAN	195468	LANDFILL CHARGES	I 18840	12/10/2024	810.00	
			12 CUBIC YARDS	001-201-683	612.00		
			6 CUBIC YARDS	001-201-683	153.00		
			HOST FEE	001-201-683	22.50		
			ENVIRONMENTAL FEE	001-201-683	22.50		
01-03554	MADISON SOUTH RUBBISH LAN	195469	LANDFILL CHARGES	I 18854	12/12/2024	324.00	
			12 CUBIC YARDS	001-201-683	102.00		
			6 CUBIC YARDS	001-201-683	204.00		
			HOST FEE	001-201-683	9.00		
			ENVIRONMENTAL FEE	001-201-683	9.00		
01-03554	MADISON SOUTH RUBBISH LAN	195470	LANDFILL CHARGES	I 18862	12/16/2024	324.00	
			12 CUBIC YARDS	001-201-683	306.00		
			HOST FEE	001-201-683	9.00		
			ENVIRONMENTAL FEE	001-201-683	9.00		
01-42885	MCGRAW RENTAL AND SUPPLY	195471	PROPANE	I 555891.1.1	12/17/2024	75.95	
			PROPANE	001-201-540	75.95		
01-42885	MCGRAW RENTAL AND SUPPLY	195472	PROPANE	I 555920.1.1	12/17/2024	76.76	
			HYDRAULIC HOSE #4	001-201-635	26.00		
			1/4" FEMALE STRAIGHT	001-201-635	50.76		
01-05786	METROPOLITAN LIFE INSURAN	195473	TM05969153: JANUARY 2025	I 202412319633	12/15/2024	2,035.39	
			TM05969153: JANUARY 2025	001-010-480	74.25		
			TM05969153: JANUARY 2025	001-020-480	74.25		
			TM05969153: JANUARY 2025	001-040-480	66.00		
			TM05969153: JANUARY 2025	001-040-480	8.25		
			TM05969153: JANUARY 2025	001-092-480	8.25		
			TM05969153: JANUARY 2025	001-100-480	602.25		
			TM05969153: JANUARY 2025	001-160-480	503.25		
			TM05969153: JANUARY 2025	001-180-480	90.75		
			TM05969153: JANUARY 2025	001-201-480	255.75		
			TM05969153: JANUARY 2025	001-340-480	99.00		
			TM05969153: JANUARY 2025	005-101-480	8.25		
			TM05969153: JANUARY 2025	400-650-480	206.25		

VENDOR NUMBER	NAME	DOCKET NUMBER	COMMENT	INVOICE NUMBER	DATE	AMOUNT	
01-05786	METROPOLITAN LIFE INSURAN	195473	TM05969153: JANUARY 2025	I 202412319633	12/15/2024	2,035.39	CONT
			TM05969153: JANUARY 2025	404-650-480	8.25		
			TM05969153: JANUARY 2025	001-000-170	28.16		
			TM05969153: JANUARY 2025	005-000-170	0.00		
			TM05969153: JANUARY 2025	400-000-170	2.48		
			TM05969153: JANUARY 2025	404-000-170	0.00		
01-44250	MID-SOUTH UNIFORM & SUPPL	195474	UNIFORM	I 654916	12/12/2024	311.82	
			TAC PANTS	001-100-535	186.92		
			UNIFORM SHIRTS	001-100-535	116.90		
			PATCHES	001-100-535	8.00		
01-44250	MID-SOUTH UNIFORM & SUPPL	195475	WEBB PANTS	I 655243	12/26/2024	179.97	
			WEEB UNIFORM PANTS	001-100-535	179.97		
01-05319	MIDSOUTH ELEVATOR LLC	195476	MONTHLY ELEVATOR MAINTENANCE	I INV-04780	12/15/2024	303.88	
			MONTHLY ELEVATOR MAINTENANCE	001-100-637	303.88		
01-05399	MILLS SCANLON DYE & PITTM	195477	SERVICES THROUGH 12-20-24	I 202412319635	12/27/2024	17,754.00	
			SERVICES THROUGH 12-20-24	001-060-601	11,341.50		
			SERVICES THROUGH 12-20-24	001-060-601	2,000.00		
			SERVICES THROUGH 12-20-24	001-060-601	1,980.00		
			SERVICES THROUGH 12-20-24	001-100-601	632.50		
			SERVICES THROUGH 12-20-24	001-060-601	340.00		
			SERVICES THROUGH 12-20-24	350-602-601	520.00		
			SERVICES THROUGH 12-20-24	404-650-601	900.00		
			SERVICES THROUGH 12-20-24	400-650-601	40.00		
01-06515	MARTHA E MILLSAPS	195478	DECEMBER 2024 SERVICES	I 202412239616	12/23/2024	540.00	
			DECEMBER 2024 SERVICES	001-340-690	540.00		
01-00953	MISS INDUSTRIES FOR THE B	195479	CALENDAR/PLANNER	I 0061655-IN	12/13/2024	383.80	
			DESK CALENDAR	001-100-500	80.88		
			DAILY PLANNER	001-100-500	87.85		
			MONTHLY PLANNER	001-100-500	124.74		
			YEAR DRY ERASE CAL	001-100-500	73.53		
			MONTH DRY ERASE CAL	001-100-500	16.80		
01-47297	MISS RUBBER CO	195480	2" HOSE ASSEMBLY	I 722609-1	12/20/2024	134.28	
			2"X25' HOSE ASSEMBLY	400-650-575	134.28		
01-47700	MISS STATE FIRE ACADEMY	195481	FD - BLS	I 33001	12/17/2024	10.00	
			BLS-CPR CARD	001-160-681	10.00		
01-47890	MISS TENT AND PARTY RENTA	195482	ANNIV EVENT - RENTAL	I 115048	12/29/2024	4,656.57	
			50 FT EXT CORD	001-093-615	40.00		
			10X60 JT LITE	001-093-615	625.00		
			8X20 CLIP ON	001-093-615	225.00		
			CAFE LIGHTS	001-093-615	315.00		
			350LB CONCRETE BLKS	001-093-615	264.00		
			BLOCK COVERS	001-093-615	160.00		
			HEATERS	001-093-615	875.00		

VENDOR NUMBER	NAME	DOCKET NUMBER	COMMENT	INVOICE NUMBER	DATE	AMOUNT	CONT
01-47890	MISS TENT AND PARTY RENTA	195482	ANNIV EVENT - RENTAL	I 115048	12/29/2024	4,656.57	
			COCKTAIL TABLES	001-093-615	232.50		
			LINENS	001-093-615	493.00		
			LINENS	001-093-615	57.00		
			DELIVERY	001-093-615	200.00		
			PICKUP	001-093-615	200.00		
			LABOR	001-093-615	641.42		
			DAMAGE WAIVER	001-093-615	328.65		
01-47950	MISS VALLEY ELECTRIC SUPP	195483	ELECTRICAL PARTS	I S1438757.001	11/18/2024	741.00	
			2" LOCKNUT	001-201-575	2.00		
			6X6X6 JCT BOX	001-201-575	38.00		
			2" PVC COUPLING	001-201-575	4.00		
			2" TERM ADPTR	001-201-575	4.00		
			12/2 ROMEX	001-201-575	125.00		
			2" PVC SCH-40	001-201-575	80.00		
			MINI FLOOD LIGHT	001-201-575	50.00		
			54W/LED/HID/50K	400-650-637	232.00		
			22W/LED/HID/50K	400-650-637	37.00		
			GFCI RCPT	400-650-637	62.00		
			TMAC MX3200	400-650-637	62.00		
			3/4 VINYL TAPE	400-650-637	45.00		
01-47950	MISS VALLEY ELECTRIC SUPP	195484	BULBS & BALLAST	I S1438812.001	12/18/2024	2,975.74	
			ULT M1500MLTAC5M500	001-340-540	746.68		
			SAT S5835	001-340-540	137.10		
			SAT S5837	001-340-540	143.24		
			IDEAL 30-454 SIZE454	001-340-540	14.31		
			3M 130C-1-1	001-340-540	87.64		
			3M 35-RED-3	001-340-540	15.80		
			3M 33 SUPER 3/4	001-340-540	17.28		
			3M 35-WHITE	001-340-540	15.80		
			3M 35-GREEN	001-340-540	15.80		
			IDEAL 30-030 NOALOX	001-340-540	21.22		
			6 THHN R500	001-340-540	904.04		
			L-FSE LEBAA	001-340-540	174.25		
			L-FSE SLC030	001-340-540	221.80		
			NSI IT-3	001-340-540	166.02		
			NSI IT-1	001-340-540	134.28		
			NSI IT-250	001-340-540	160.48		
01-47950	MISS VALLEY ELECTRIC SUPP	195485	ELECTRICAL SUPPLIES	I S1438813.001	12/19/2024	2,844.79	
			E-MCAODD-1500	001-340-540	754.68		
			SAT S5837 MH1500	001-340-540	1,181.73		
			SAT S49391 22W	001-340-540	205.86		
			SAT S49394 54W	001-340-540	432.81		
			IDEAL 30-454	001-340-540	14.31		
			L-FSE SLC030	001-340-540	255.40		
01-47950	MISS VALLEY ELECTRIC SUPP	195486	54W/LED/HID/50K BULB	I S1440500.001	12/20/2024	116.00	
			54W/LED/HID/50K BULB	400-650-637	116.00		

VENDOR NUMBER	NAME	DOCKET NUMBER	COMMENT	INVOICE NUMBER	DATE	AMOUNT
01-04419	MISSISSIPPI AG COMPANY	195487	HYDRAULIC QUICK CONNECTS	I P26532	12/11/2024	295.18
			HYDRAULIC QUICK CONNECTS	001-340-635	23.46	
			HYDRAULIC QUICK CONNECTS	001-340-635	271.72	
01-03639	MOTOROLA SOLUTIONS INC	195488	FD - MACH ALERT SYSTEMS	I 8230492713	12/03/2024	35,357.50
			MACH ALERT SYSTEMS	001-160-730	35,357.50	
01-04679	NEXAIR LLC	195489	TORCH BOTTLE RENTAL	I 0012628755	11/30/2024	98.96
			HIGH PSI BOTTLE	400-650-540	43.38	
			LOW PSI BOTTLE	400-650-540	43.38	
			CYLINDER CONTROL TEC	400-650-540	1.20	
			CYLINDER MAINTENANCE	400-650-540	11.00	
01-01133	O'REILLY AUTO PARTS	195490	WIPER BLADES	I 125833	12/10/2024	59.80
			WIPER BLADES 18"	001-201-632	29.90	
			WIPER BLADES 22"	400-650-632	29.90	
01-01133	O'REILLY AUTO PARTS	195491	WIPER BLADES	I 125841	12/10/2024	29.90
			WIPER BLADES 20"	001-201-632	29.90	
01-01133	O'REILLY AUTO PARTS	195492	WIPER BLADES	I 125846	12/10/2024	73.98
			SLIME TIRE SEALANT	001-201-540	73.98	
01-01133	O'REILLY AUTO PARTS	195493	P330 PART	I 126048	12/11/2024	35.14
			P330 PART	001-100-632	35.14	
01-01133	O'REILLY AUTO PARTS	195494	AUTO PARTS P362	I 399082	12/17/2024	51.97
			GALLON ANTIFREZ	001-100-632	14.99	
			QT MOTOR OIL	001-100-632	7.99	
			5QT MOTOR OIL	001-100-632	28.99	
01-01133	O'REILLY AUTO PARTS	195495	AUTO PARTS P362	I 399137	12/17/2024	60.81
			IRIDIUM PLUG	001-100-632	55.32	
			OIL FILTER	001-100-632	5.49	
01-53715	OFFICE PRODUCTS PLUS INC	195496	FD - SUPPLIES	I 1078717-0	12/18/2024	216.31
			CALENDARS	001-160-500	13.25	
			DESK CALENDAR	001-160-500	3.07	
			POST IT NOTES 12PK	001-160-500	15.74	
			COPY PAPER	001-160-500	152.67	
			CLASP ENVELOPES	001-160-500	20.51	
			DRY ERASE MARKER	001-160-500	6.84	
			HIGH LIGHTER 12PK	001-160-500	2.75	
			HIGH LIGHTER 5PK	001-160-500	1.48	
01-53715	OFFICE PRODUCTS PLUS INC	195497	FD - SUPPLIES	I 1078717-1	12/23/2024	27.93
			LABELS	001-160-500	14.02	
			LABELS	001-160-500	13.91	
01-06841	OVERSIGHT LLC	195498	OVERPAYMENT PRIVILEGE LICENSE	I 202412179586	12/17/2024	20.00
			OVERPAYMENT PRIVILEGE LICENSE	001-000-220	20.00	

VENDOR NUMBER	NAME	DOCKET NUMBER	COMMENT	INVOICE NUMBER	DATE	AMOUNT
01-04821	P.R. EVENT MANAGEMENT LLC	195499	MANAGEMENT NTCR 2025	I 1378	12/23/2024	5,500.00
			MANAGE NTCR 2025	001-340-650	5,500.00	
01-56355	PIP PRINTING	195500	PARADE SIGNS	I 334594	12/05/2024	637.30
			24X18 COROPLAST	001-340-650	599.80	
			DESIGNS/REVISIONS	001-340-650	37.50	
01-56355	PIP PRINTING	195501	MAGENETS FOR PARADE	I 334629	12/12/2024	135.00
			MAGENETS FOR PARADE	001-550-599	135.00	
01-56355	PIP PRINTING	195502	PARADE SIGNS	I 334632	12/12/2024	117.48
			3X2 PARADE BANNERS	001-340-650	79.98	
			DESIGNS/REVISIONS	001-340-650	37.50	
01-56355	PIP PRINTING	195503	PARADE SIGNS	I 334640	12/12/2024	136.47
			24X18 LOGO COROPLAST	001-340-650	98.97	
			DESIGN/REVISIONS	001-340-650	37.50	
01-04399	PITNEY BOWES GLOBAL FINAN	195504	11-01-24 - 01-31-25 LEASE	I 3320104608	12/13/2024	476.37
			11-01-24 - 01-31-25 LEASE	001-040-635	476.37	
01-04380	POWERDMS INC	195505	12-24-24 - 12-23-25 BILLING	I INV-123045	10/31/2024	7,842.60
			12-24-24 - 12-23-25 BILLING	001-100-635	7,842.60	
01-00381	PUCKETT RENTS	195506	LIGHT TOWERS	I 1085118-0001	12/06/2024	459.00
			LIGHT TOWER 400WATT	001-340-650	450.00	
			ENVIRONMENTAL FEE	001-340-650	9.00	
01-60575	REVELL HARDWARE & SUPPLY	195507	LOCK NUTS	C 8138/D	12/18/2024	19.98CR
			LOCK NUTS RETURN	001-100-540	19.98CR	
01-60575	REVELL HARDWARE & SUPPLY	195508	CORN/GRASS BROOM	C 8140/D	12/19/2024	8.99CR
			CREDIT DOOR LATCH	001-201-540	8.99CR	
01-60575	REVELL HARDWARE & SUPPLY	195509	MISC ITEMS	I 8018/D	12/11/2024	42.31
			BUTANE LIGHTER FLEX	001-340-540	9.99	
			ACE UTILITY LIGHTER	001-340-540	9.18	
			KEY SINGLE CUT	001-340-540	13.95	
			VELCRO TAPE 5'	001-340-540	9.19	
01-60575	REVELL HARDWARE & SUPPLY	195510	LOCK NUTS	I 8056/D	12/12/2024	19.98
			LOCK NUTS	001-100-540	19.98	
01-60575	REVELL HARDWARE & SUPPLY	195511	CORN/GRASS BROOM	I 8115/D	12/18/2024	24.97
			CORN/GRASS BROOM	001-201-510	17.98	
			COUPLING 3/8X1/4 FPT	001-201-540	6.99	
01-60575	REVELL HARDWARE & SUPPLY	195512	CORN/GRASS BROOM	I 8132/D	12/18/2024	8.99
			SLIDING DOOR LATCH	001-201-540	8.99	
01-60575	REVELL HARDWARE & SUPPLY	195513	LOCK NUTS	I 8139/D	12/18/2024	9.99

VENDOR NUMBER	NAME	DOCKET NUMBER	COMMENT	INVOICE NUMBER	DATE	AMOUNT	
01-60575	REVELL HARDWARE & SUPPLY	195513	LOCK NUTS	I 8139/D	12/18/2024	9.99	CONT
			LOCK NUTS	001-100-540	9.99		
01-60975	RIDGELAND CHAMBER OF COMM	195514	MAYOR'S PRAYER BREAKFAST SPONS	I 21694	12/31/2024	800.00	
			MAYOR'S PRAYER BREAKFAST SPONS	001-093-615	800.00		
01-02496	RJ YOUNG COMPANY	195515	C-JC1548: 11-23-24 - 12-22-24	I INV7272368	12/17/2024	4,878.95	
			C-JC1548: 11-23-24 - 12-22-24	001-010-635	286.53		
			C-JC1548: 11-23-24 - 12-22-24	001-020-635	136.19		
			C-JC1548: 11-23-24 - 12-22-24	001-040-635	538.16		
			C-JC1548: 11-23-24 - 12-22-24	001-080-635	26.85		
			C-JC1548: 11-23-24 - 12-22-24	001-100-635	1,981.31		
			C-JC1548: 11-23-24 - 12-22-24	001-160-635	443.11		
			C-JC1548: 11-23-24 - 12-22-24	001-180-635	471.40		
			C-JC1548: 11-23-24 - 12-22-24	001-340-635	366.54		
			C-JC1548: 11-23-24 - 12-22-24	400-650-635	504.70		
			C-JC1548: 11-23-24 - 12-22-24	001-201-635	124.16		
01-06815	ROSEMARY AND THYME CATERI	195516	CATERING FOR EVENT	I 1206	11/22/2024	5,025.00	
			CATERING FOR EVENT	001-093-615	5,025.00		
01-06815	ROSEMARY AND THYME CATERI	195517	CATERING FOR EVENT	I 1241	1/02/2025	100.00	
			CATERING FOR EVENT	001-093-615	100.00		
01-06608	SOMBRA MEXICAN KITCHEN	195518	OVERPAYMENT PRIVILEGE LICENSE	I 202412209609	12/12/2024	50.00	
			OVERPAYMENT PRIVILEGE LICENSE	001-000-220	50.00		
01-65950	SOUTHERN ADMINISTRATORS	195519	COMPANY #106: JANUARY 2025	I 24122310600000	12/23/2024	523.59	
			COMPANY #106: JANUARY 2025	001-010-481	15.75		
			COMPANY #106: JANUARY 2025	001-020-481	12.25		
			COMPANY #106: JANUARY 2025	001-040-481	10.50		
			COMPANY #106: JANUARY 2025	001-092-481	0.00		
			COMPANY #106: JANUARY 2025	001-040-481	1.75		
			COMPANY #106: JANUARY 2025	001-100-481	75.25		
			COMPANY #106: JANUARY 2025	001-160-481	71.75		
			COMPANY #106: JANUARY 2025	001-180-481	8.75		
			COMPANY #106: JANUARY 2025	001-201-481	33.25		
			COMPANY #106: JANUARY 2025	001-340-481	15.75		
			COMPANY #106: JANUARY 2025	005-101-481	1.75		
			COMPANY #106: JANUARY 2025	400-650-481	21.00		
			COMPANY #106: JANUARY 2025	404-650-481	3.50		
			COMPANY #106: JANUARY 2025	001-000-170	226.12		
			COMPANY #106: JANUARY 2025	005-000-170	1.50		
			COMPANY #106: JANUARY 2025	400-000-170	21.72		
			COMPANY #106: JANUARY 2025	404-000-170	3.00		
01-03210	SOUTHERN CONNECTION POLIC	195520	UNIFORMS	I 32676	11/19/2024	118.00	
			SHAVERS PANTS	001-100-535	118.00		
01-03210	SOUTHERN CONNECTION POLIC	195521	FD - BADGES	I 32876	12/06/2024	585.00	
			BADGES	001-160-535	395.00		
			HOLSTERS	001-160-535	190.00		

VENDOR NUMBER	NAME	DOCKET NUMBER	COMMENT	INVOICE NUMBER	INVOICE DATE	AMOUNT
01-03210	SOUTHERN CONNECTION POLIC	195522	FD - UNIFORMS	I 32930	12/10/2024	598.00
			TACTICAL PANTS	001-160-535	472.00	
			BELTS	001-160-535	126.00	
01-03210	SOUTHERN CONNECTION POLIC	195523	FD- UNIFORMS	I 32950	12/12/2024	79.00
			TACTICAL PANTS	001-160-535	79.00	
01-03210	SOUTHERN CONNECTION POLIC	195524	STAND MOUNT	I 32958	12/13/2024	15,200.00
			COM. STAND MOUNT	001-100-540	15,200.00	
01-03210	SOUTHERN CONNECTION POLIC	195525	SRT SUPPRESSORS	I 32963	12/13/2024	1,950.10
			5.56 TURBO K-RB	103-101-730	499.95	
			YHM ADAPTER 1/2X28	103-101-730	201.75	
			9MM SILENCER	103-101-730	999.90	
			3 LUG ADAPTER	103-101-730	248.50	
01-03210	SOUTHERN CONNECTION POLIC	195526	FD - SQUAD 4	I 32984	12/17/2024	455.00
			LABOR	001-160-632	390.00	
			SUPPLIES	001-160-632	65.00	
01-03210	SOUTHERN CONNECTION POLIC	195527	HEGWOOD JACKET	I 33044	12/20/2024	349.99
			HEGWOOD JACKET	001-100-535	349.99	
01-03210	SOUTHERN CONNECTION POLIC	195528	UNIFORMS	I 33059	12/20/2024	285.00
			PHILLIPS PANTS	001-100-535	177.00	
			PHILLIPS POLO	001-100-535	108.00	
01-03210	SOUTHERN CONNECTION POLIC	195529	UNIFORMS	I 33060	12/20/2024	143.00
			POWELL PANT	001-100-535	79.00	
			POWELL SHIRT	001-100-535	64.00	
01-03210	SOUTHERN CONNECTION POLIC	195530	UNIFORMS	I 33061	12/23/2024	158.00
			WILLIAMS PANTS	001-100-535	158.00	
01-03608	STALKER RADAR	195531	REPAIR COUNTING SENSOR	I 449273	12/11/2024	227.50
			RADAR REPAIR	001-100-635	195.00	
			SHIPPING	001-100-635	32.50	
01-03641	STAPLES BUSINESS CREDIT	195532	OFFICE SUPPLIES	I 6020076210	12/25/2024	82.18
			4-TIER DESK TRAY	001-180-540	82.18	
01-03641	STAPLES BUSINESS CREDIT	195533	LEGAL FILE FOLDERS	I 6020076212	12/25/2024	53.09
			LEGAL FILE FOLDERS	001-180-540	53.09	
01-03641	STAPLES BUSINESS CREDIT	195534	OFFICE SUPPLIES	I 6020076214	12/25/2024	13.49
			DESK CALENDAR	001-180-540	13.49	
01-03641	STAPLES BUSINESS CREDIT	195535	ADMIN SUPPLIES - CH	I 6020076215	12/25/2024	92.78
			RECEIPT BOOK	001-040-500	92.78	
01-03641	STAPLES BUSINESS CREDIT	195536	ADMIN SUPPLIES - CH	I 6020076216	12/25/2024	44.36

VENDOR NUMBER	NAME	DOCKET NUMBER	COMMENT	INVOICE NUMBER	DATE	AMOUNT	
01-03641	STAPLES BUSINESS CREDIT	195536	ADMIN SUPPLIES - CH	I 6020076216	12/25/2024	44.36	CONT
			BATTERIES	001-040-540	20.50		
			KLEENEX	001-092-510	23.86		
01-03641	STAPLES BUSINESS CREDIT	195537	ADMIN SUPPLIES - CH	I 6020076217	12/25/2024	140.48	
			8.5X11 COPY PAPER	001-040-500	127.47		
			SMALL POP UP NOTES	001-040-500	1.81		
			LARGE POP UP NOTES	001-040-500	4.90		
			ENERGEL PEN REFILL	001-040-500	6.30		
01-67940	STAR SERVICE INC OF JACKS	195538	PD - REPAIR VAV 16 & BOILER	I SJ0001625	11/25/2024	210.00	
			PD - REPAIR VAV 16 & BOILER	001-100-637	210.00		
01-67940	STAR SERVICE INC OF JACKS	195539	REPAIR A/C UNIT	I SJ0001631	11/27/2024	217.64	
			MATERIAL	001-201-637	7.64		
			TRAVEL	001-201-637	30.00		
			LABOR	001-201-637	180.00		
01-67940	STAR SERVICE INC OF JACKS	195540	REPAIR HEATERS	I SJ0001705	12/20/2024	1,485.77	
			REPAIR HEATER	001-201-637	1,485.77		
01-67940	STAR SERVICE INC OF JACKS	195541	REPAIR HEATERS	I SJ0001706	12/20/2024	1,145.48	
			REPAIR HEATER	400-650-637	1,145.48		
01-68050	STATE CHEMICAL MANUFACTUR	195542	FRAGRANCE PAKS	I 903530681	10/15/2024	1,023.30	
			FRAGRANCE PAK	001-340-540	217.80		
			FRAGRANCE BURST	001-340-540	333.00		
			FRAGRANCE PAK	001-340-540	217.80		
			ZERO WASP/HORNET	001-340-540	254.70		
01-68050	STATE CHEMICAL MANUFACTUR	195543	FRAGRANCE PAKS	I 903598073	12/10/2024	550.80	
			FRAGRANCE PAK	001-340-540	217.80		
			FRAGRANCE BURST	001-340-540	333.00		
01-68250	STATE TREASURER FUND: 337	195544	ANALYTICAL FEES: DECEMBER 2024	I 90154260	12/05/2024	1,560.00	
			ANALYTICAL FEES: DECEMBER 2024	001-100-604	1,560.00		
01-69095	SULLIVAN ELECTRIC	195545	SERVICE CALLS	I 386710	12/20/2024	3,960.00	
			SC LODGE	001-340-637	630.00		
			SC FRIENDSHIP PARK	001-340-637	810.00		
			SC FREEDOM RIDGE	001-340-637	1,530.00		
			SC WOLCOTT & FRP	001-340-637	990.00		
01-69095	SULLIVAN ELECTRIC	195546	WIRE GENERATOR	I 386712	12/19/2024	4,680.00	
			WIRE GENERATOR	400-650-637	3,690.00		
			REPAIR LIGHTS	400-650-637	990.00		
01-69155	SUNBELT FIRE APPARATUS IN	195547	FD - SUPPLIES	I 00020205	11/18/2024	2,465.00	
			EARLAPS 6"	001-160-540	2,090.00		
			LEATHER FRONT, HELME	001-160-540	300.00		
			SHIPPING	001-160-540	75.00		

VENDOR NUMBER	NAME	DOCKET NUMBER	COMMENT	INVOICE NUMBER	INVOICE DATE	AMOUNT
01-69155	SUNBELT FIRE APPARATUS IN	195548	FD - BATTERY	I 00021085	12/16/2024	52.00
			STREAM LIGHT BATTERY	001-160-540	42.00	
			SHIPPING	001-160-540	10.00	
01-00845	SUNCOAST INFRASTRUCTURE I	195549	HERITAGE AT JACOBS FARM	I S24161-01F	12/10/2024	13,064.00
			TV INSPECTION 6"-12"	400-650-603	2,079.00	
			NORMAL CLEAN 8&10"	400-650-603	1,485.00	
			PIPE MOBILIZATION	400-650-603	9,500.00	
01-06312	SUPER SMART SHOPPERS	195550	CID SUPPLIES	I PS-INV103855	12/07/2024	103.49
			16OZ GLUE	001-100-540	57.99	
			1OZ GLUE	001-100-540	32.50	
			SHIPPING	001-100-540	13.00	
01-06851	SUPREME LENDING	195551	OVERPAYMENT PRIVILEGE LICENSE	I 202412209605	12/20/2024	17.60
			OVERPAYMENT PRIVILEGE LICENSE	001-000-220	17.60	
01-06843	T-MOBILE FINANCIAL LLC	195552	OVERPAYMENT PRIVILEGE LICENSE	I 202412199588	12/19/2024	20.00
			OVERPAYMENT PRIVILEGE LICENSE	001-000-220	20.00	
01-06848	T-MOBILE FINANCIAL LLC	195553	OVERPAYMENT PRIVILEGE LICENSE	I 202412199592	12/19/2024	20.00
			OVERPAYMENT PRIVILEGE LICENSE	001-000-220	20.00	
01-06844	T-MOBILE LEASING LLC	195554	OVERPAYMENT PRIVILEGE LICENSE	I 202412199589	12/19/2024	20.00
			OVERPAYMENT PRIVILEGE LICENSE	001-000-220	20.00	
01-06847	T-MOBILE LEASING LLC	195555	OVERPAYMENT PRIVILEGE LICENSE	I 202412199591	12/19/2024	20.00
			OVERPAYMENT PRIVILEGE LICENSE	001-000-220	20.00	
01-06846	T-MOBILE SOUTH LLC	195556	OVERPAYMENT PRIVILEGE LICENSE	I 202412199590	12/19/2024	20.00
			OVERPAYMENT PRIVILEGE LICENSE	001-000-220	20.00	
01-06849	T-MOBILE SOUTH LLC	195557	OVERPAYMENT PRIVILEGE LICENSE	I 202412199593	12/19/2024	20.00
			OVERPAYMENT PRIVILEGE LICENSE	001-000-220	20.00	
01-06575	TOWNSHIP AT COLONY PARK	195558	BOND LESS OT XMAS OPEN HOUSE	I 202412209611	12/05/2024	397.69
			BOND LESS OT XMAS OPEN HOUSE	001-000-119	397.69	
01-04160	TRUST CARE HEALTH LLC	195559	10-28-24 SERVICES	I 10285K19538	12/01/2024	160.00
			10-28-24 SERVICES	001-100-604	160.00	
01-04836	TYLER BUSINESS FORMS	195560	1095C FORMS	I 98943	12/10/2024	192.33
			1096 FORMS	001-040-540	139.58	
			SHIPPING	001-040-540	52.75	
01-00544	U.S. LAWNS OF JACKSON	195561	CITY HALL LANDSCAPE	I 52139	1/01/2025	2,402.08
			CITY HALL LANDSCAPE	001-340-604	2,402.08	
01-00544	U.S. LAWNS OF JACKSON	195562	MONTHLY MAINTENANCE	I 52140	1/01/2025	8,442.00
			MONTHLY MAINTENANCE	001-340-604	8,442.00	

VENDOR NUMBER	NAME	DOCKET NUMBER	COMMENT	INVOICE NUMBER	DATE	AMOUNT
01-03710	UNION AUTO PARTS	195563	AUTO PARTS	I 2947037-00	12/10/2024	130.14
			P330 SENSOR	001-100-632	74.04	
			P330 SENSOR	001-100-632	56.10	
01-03710	UNION AUTO PARTS	195564	AUTO PARTS	I 2947473-00	12/13/2024	172.66
			P227 BATTERY	001-100-632	172.66	
			P227 CORE	001-100-632	18.00	
			P227 DIRTY CORE	001-100-632	18.00CR	
01-03710	UNION AUTO PARTS	195565	#65 BATTERY	I 2948540-00	12/16/2024	172.66
			#65 BATTERY	001-201-632	172.66	
			CORE CHARGE	001-201-632	18.00	
			CORE RETURN	001-201-632	18.00CR	
01-03710	UNION AUTO PARTS	195566	#65 BATTERY	I 2949051-00	12/16/2024	172.66
			#65 BATTERY	400-650-635	172.66	
			CORE CHARGE	400-650-635	18.00	
			CORE RETURN	400-650-635	18.00CR	
01-03710	UNION AUTO PARTS	195567	AUTO PARTS	I 2949587-00	12/17/2024	765.32
			P58 DISC BREAK	001-100-632	316.08	
			P58 FRONT BRK ROTOR	001-100-632	449.24	
01-03710	UNION AUTO PARTS	195568	REPAIR 340-1-94	I 2950490-00	12/18/2024	61.80
			REAR SHOCKS	001-340-635	61.80	
01-03710	UNION AUTO PARTS	195569	AUTO PARTS	I 2950523-00	12/18/2024	133.86
			P341 BATTERY	001-100-632	133.86	
			P341 CORE	001-100-632	11.00	
			P341 DIRTY CORE	001-100-632	11.00CR	
01-05572	UNMANNED SYSTEMS GROUP LL	195570	FD - DRONE	I 7799	12/18/2024	15,665.99
			MATRICE 30T	001-160-730	8,979.00	
			TB30 FLIGHT BATTERY	001-160-730	2,632.00	
			SECONDARY REMOTE	001-160-730	1,600.00	
			RC PLUS STRAP	001-160-730	78.00	
			WB37 EXT BATTERY	001-160-730	118.00	
			LP12 SPEAKER	001-160-730	2,199.00	
			HOODMAN LAND PAD	001-160-730	59.99	
01-05572	UNMANNED SYSTEMS GROUP LL	195571	DRONE	I 7800	12/18/2024	18,227.00
			BAT STATION, HARD CA	001-100-730	8,979.00	
			ENTERPRISE CARE	001-100-730	658.00	
			FLIGHT BATTERY	001-100-730	3,290.00	
			RC PLUS	001-100-730	1,600.00	
			SPOTLIGHT	001-100-730	1,950.00	
			CHARGER	001-100-730	999.00	
			SPARE PROP SET	001-100-730	98.00	
			AUX BATTERY	001-100-730	236.00	
			STRAP BRACKET KIT	001-100-730	78.00	
			WHEELED BATTERY CASE	001-100-730	339.00	

VENDOR NUMBER	NAME	DOCKET NUMBER	COMMENT	INVOICE NUMBER	DATE	AMOUNT
01-05322	W H J T - FM	195572	CHRISTMAS AD 2024	I 990-00347-0001	12/15/2024	238.00
			CHRISTMAS AD 2024	001-340-615	238.00	
01-05322	W H J T - FM	195573	CHRISTMAS AD 2024	I 990-00348-0001	12/15/2024	72.00
			CHRISTMAS AD 2024	001-340-615	72.00	
01-05422	W I I N - AM	195574	CHRISTMAS AD 2024	I 990-00349-0001	12/15/2024	72.00
			CHRISTMAS AD 2024	001-340-615	72.00	
01-01241	W J K K - FM "MIX 98.7"	195575	CHRISTMAS AD 2024	I 990-00350-0001	12/15/2024	432.00
			CHRISTMAS AD 2024	001-340-615	432.00	
01-01269	W U S J-FM "US 96.3"	195576	CHRISTMAS AD 2024	I 990-00351-0001	12/15/2024	504.00
			CHRISTMAS AD 2024	001-340-615	504.00	
01-01268	W Y O Y-FM "101.7...Y101"	195577	CHRISTMAS AD 2024	I 990-00352-0001	12/15/2024	630.00
			CHRISTMAS AD 2024	001-340-615	630.00	
01-75450	WALMART	195578	CH CHRISTMAS LUNCH	I 01559	12/18/2024	82.70
			PLATES	001-092-540	25.28	
			CUPS	001-092-540	10.68	
			CUPS	001-092-540	3.98	
			CUTLERY	001-092-540	6.88	
			CUTLERY	001-092-540	19.96	
			PLATES	001-092-540	8.94	
			NAPKINS	001-092-540	6.98	
01-75450	WALMART	195579	ORNAMENT SWAP	I 02471	12/10/2024	95.40
			18 CT CHEETOS	001-340-650	9.98	
			THUMBPRINT	001-340-650	7.47	
			GINGERBREAD	001-340-650	7.47	
			GV LUNCHBAGS	001-340-650	2.28	
			NAPKINS	001-340-650	5.96	
			PLATES	001-340-650	5.96	
			PAINTER WHT	001-340-650	5.04	
			COKE	001-340-650	15.28	
			ENR AA 24PK	001-340-650	17.98	
			ENR MX 24AAA	001-340-650	17.98	
01-75450	WALMART	195580	SUPPLIES	I 02908	12/12/2024	163.43
			LYSOL SPRAY 2/1	001-201-510	13.47	
			AIR FRESHENER	001-201-540	3.88	
			COFFEE	001-201-540	12.94	
			CREAMER	001-201-540	47.76	
			SUGAR	001-201-540	12.56	
			8 1/2X11 1/2 PAPER	400-650-500	49.97	
			8 1/2X11 1/2 CREDIT	400-650-500	49.97CR	
			8 1/2X11 1/2 PAPER	400-650-500	49.97	
			SHARPIE MARKER 5/1	400-650-500	4.87	
			AA BATTERY 24/1	400-650-540	17.98	

VENDOR NUMBER	NAME	DOCKET NUMBER	COMMENT	INVOICE NUMBER	DATE	AMOUNT
01-75450	WALMART	195581	SHOP SUPPLIES	I 04229	12/17/2024	31.40
			PLASTIC CUPS	001-340-540	3.98	
			CLR CUTLERY	001-340-540	9.98	
			PLASTIC CUPS	001-340-540	3.98	
			GV 10100 WT	001-340-540	9.98	
			BOUNTY NAP	001-340-540	3.48	
01-75450	WALMART	195582	CH CHRISTMAS LUNCH	I 04286	12/18/2024	40.00
			SUBWAY	001-020-540	20.00	
			SUBWAY	001-020-540	20.00	
01-75450	WALMART	195583	FD - SUPPLIES	I 04721A	12/19/2024	218.08
			LAUNDRY DETERGENT	001-160-510	31.88	
			DAWN DISH DETERGENT	001-160-510	2.94	
			BR COFFEE K-CUPS	001-160-540	31.94	
			DD CARAMEL COFFEE	001-160-540	16.92	
			SM HOT CHOCOLATE	001-160-540	7.92	
			FOLGERS COFFEE	001-160-540	23.96	
			SB COFFEE	001-160-540	8.48	
			ZIP LOCK BAGS	001-160-540	1.98	
			CREAMER	001-160-540	4.98	
			NEXCARE BANDAGES	001-160-540	2.54	
			BAND-AID BANDAGES	001-160-540	7.54	
			EQUATE BANDGAGES	001-160-540	1.84	
			EQUATE OINTMENT	001-160-540	4.87	
			VICKS MENTHOL DROPS	001-160-540	4.47	
			EQUATE VAPOR RUB	001-160-540	1.98	
			EQUATE SINUS CAPLETS	001-160-540	4.42	
			EQUATE IBUPROFEN	001-160-540	4.28	
			EQUATE ASSORTED BAND	001-160-540	6.97	
			PEPTO BISMOL CHEWABL	001-160-540	2.98	
			EQUATE STOMACH RELIE	001-160-540	3.14	
			EQUATE ANTACID	001-160-540	4.94	
			ALLERGY RELIEF	001-160-540	1.92	
			PAIN RELIEF TABLETS	001-160-540	1.98	
			ANESTHETIC SPRAY	001-160-540	7.48	
			PAIN RELIEF TABLETS	001-160-540	4.63	
			CLEAR EYES	001-160-540	5.42	
			ALLERGY RELIEF	001-160-540	15.68	
01-75450	WALMART	195584	SUPPLIES FOR SHOP	I 05656A	12/16/2024	29.88
			MILO SWT 128	001-340-540	6.96	
			SPRITE	001-340-540	7.64	
			COKE	001-340-540	15.28	
01-75450	WALMART	195585	FD - SUPPLIES	I 06097	12/23/2024	104.21
			DAWN DISHWASHING	001-160-510	29.82	
			409 LEMON CLEANER	001-160-540	10.62	
			WATER	001-160-540	14.91	
			ANTACID	001-160-540	9.38	
			PAIN RELIEF CAPLETS	001-160-540	7.98	

VENDOR NUMBER	NAME	DOCKET NUMBER	COMMENT	INVOICE NUMBER	DATE	AMOUNT	CONT
01-75450	WALMART	195585	FD - SUPPLIES	I 06097	12/23/2024	104.21	
			GAS RELIEF CAPLETS	001-160-540	3.98		
			SINUS CONGESTION	001-160-540	4.42		
			STOMACH RELIEF CHEWA	001-160-540	3.14		
			ALKA-SELTZER PLUS	001-160-540	9.42		
			NEOSPORIN	001-160-540	4.88		
			PEROXIDE	001-160-540	1.00		
			COUGH DROPS	001-160-540	2.48		
			Q-TIPS	001-160-540	2.18		
01-75450	WALMART	195586	WATERS FOR ANNIVERSARY	I 06636	12/27/2024	100.06	
			10 OZ WATERS	001-093-615	12.50		
			DASANI	001-093-615	15.76		
			GV 40PK	001-093-615	16.08		
			AQUAFINA	001-093-615	55.72		
01-75450	WALMART	195587	FD-SUPPLIES	I 08166	12/23/2024	68.00	
			STORAGE BOXES	001-160-540	26.92		
			AIR HOSE PREM KIT	001-160-540	29.48		
			HEFTY STORAGE BAGS	001-160-540	5.12		
			ZIPLOC BAGS	001-160-540	6.48		
01-75450	WALMART	195588	FD - CANDY	I 08623A	12/06/2024	72.07	
			SNICKERS	001-160-540	7.97		
			DARK CHOC KISSES	001-160-540	8.54		
			CANDY CARNIVAL	001-160-540	37.02		
			CANDY CARNIVAL	001-160-540	18.54		
01-75450	WALMART	195589	ORNAMENT SWAP	I 09687	12/10/2024	9.98	
			18 CT WIN FAV	001-340-650	9.98		
01-75750	WARING OIL CO	195590	GENERATOR DIESEL FUEL	I 384537	12/23/2024	536.62	
			DIESEL FUEL	001-100-525	419.52		
			ENVIRONMENT FEE	001-100-525	0.61		
			MS LOC GOV	001-100-525	1.52		
			OILSPILL/SPRFND	001-100-525	0.94		
			LUST	001-100-525	0.15		
			FUEL DELIVERY	001-100-525	100.00		
			COMPLIANCE FEE	001-100-525	13.88		
01-04506	WELLS MARBLE & HURST PLLC	195591	OCTOBER 2024 SERVICES	I 156618	12/04/2024	47.00	
			OCTOBER 2024 SERVICES	001-060-601	47.00		
01-06298	WELLTOWER PEGASUS TENANT	195592	OVERPAYMENT PRIVILEGE LICENSE	I 202412209606	11/21/2024	10.50	
			OVERPAYMENT PRIVILEGE LICENSE	001-000-220	10.50		
01-06805	WERCO BUILDING SPECIALTIE	195593	PLAQUE - CH	I 68539	12/04/2024	1,444.00	
			PLAQUE	001-092-637	1,444.00		
01-06791	ASHLEY WINTERS	195594	REMITTANCE OF RESTITUTION	I 202412309629	12/10/2024	650.00	
			REMITTANCE OF RESTITUTION	001-000-122	650.00		

TOTAL = 752,557.50

FUND TOTALS

FUND	NAME	TOTAL
001	GENERAL FUND	663,062.99
005	COURT SERVICES FEE FUND	204.93
103	FORFEITURE AND SEIZURE	1,950.10
350	RIDGEWOOD RD DRAINAGE	520.00
400	PUBLIC UTILITIES FUND	56,331.01
404	EMCRS OPERATION & MAINT	1,335.14
467	METER SWAP PROJECT	29,153.33
	TOTALS FOR ALL FUNDS =	752,557.50

DEPT: ALL
PAYROLL NO#: 01
PAY PERIOD BEGINNING: 12/06/2024
PAY PERIOD ENDING: 12/19/2024

December 27, 2024 payroll

*** GRAND TOTALS ***

EARNINGS			BENF/REIMB	
DESC	HRS	AMOUNT	DESC	AMOUNT
SAL	576.00	31,497.44	VEH	22.40
SMON	0.00	33,057.87		
REG	18,985.50	484,903.00		
R/O	38.25	811.85		
O/T	256.50	8,115.14		
CE	36.76	0.00		
CMPRG	23.00	0.00		
COMP	116.25	3,163.33		
SICK	669.50	17,041.43		
VAC	731.50	20,855.64		
HOL	519.50	17,015.84		
HOLB	8.00	0.00		
FNRL	24.00	967.44		
CIVIL	32.00	674.56		
PARAM	0.00	3,846.20		
SHIFT	0.00	450.00		
FEQMT	0.00	35.48		
YMCA	0.00	16.50		
TRAFF	0.00	1,921.92		
MBNHI	12.00	581.64		
TASKF	7.00	302.19		

DEDUCTIONS			
CD	ABBV	EMPLOYEE	EMPLOYER
AFA	AFACC	1121.43	
AFC	AFCAN	892.04	
AFD	AFSHO	1434.37	
AFH	AFHOS	438.40	
AFS	AFSPE	271.86	
ANN	ANUTY	5254.50	
C18	CHSUP	202.50	
C32	CHSUP	225.00	
C42	CHSUP	147.50	
C59	CHSUP	285.25	
C67	CHSUP	177.50	
C70	CHSUP	107.00	
C73	CHSUP	86.50	
C74	CHSUP	165.00	
C79	CHSUP	171.00	
C82	CHSUP	127.50	
C86	CHSUP	87.50	
C87	CHSUP	72.50	
C88	CHSUP	327.50	
C92	CHSUP	76.00	
C94	CHSUP	382.50	
C95	CHSUP	90.00	
C96	CHSUP	85.50	
C97	CHSUP	146.00	
CAF	ADMFE	111.75	130.24
CFM	CFM	10.50	12.25
CHC	CHCAR	1183.05	
CRU	CRUN	3373.00	
D92	GARNI	215.80	
D94	GARNI	105.41	
DCF	DENCF	2146.99	1230.39
DCM	DCM	312.72	151.90
DEN	DENTL	38.38	2369.64
DMO	DMO		91.14
FCE	FLEX	8.68	
HCF	HTHCF	13317.33	21165.81
HCM	HCM	2297.64	3577.32
HLT	HELTH		49188.15
HRF	HRF	193.13	277.98
LIF	LIFE	16.76	1040.69
MDF	YMCA	114.00	
PBA	POBEN	236.25	

TAXES			
DESC	TAXABLE	EMPLOYEE	EMPLOYER
FED W/H	539,610.94	46,050.53	
ST WH MS	539,610.94	16,113.00	
FICA	599,531.52	37,171.02	37171.02
MEDI	600,466.72	8,706.77	8706.77

DEPT: ALL
PAYROLL NO#: 01
PAY PERIOD BEGINNING: 12/06/2024
PAY PERIOD ENDING: 12/19/2024

** (CONTINUED) **

DATE	ORG FN	ACCOUNT	CODE/RATE	HOURLY RATE	HOURS	AMOUNT	PROJECT		
				RET RET	55601.28	111007.63			
				T89 TAXLE	596.94				
				UNR UNREM	2956.12				
TOTALS:	22,035.76	625,257.47	22.40		95210.58	190243.14		108,041.32	45877.79

DEPARTMENT RECAP

DEPT NO#	GROSS	REGULAR	OVERTIME	LEAVE	OTHER	BENEFITS	DEDUCTIONS	TAXES	NET
001-010	25,808.88	25,230.54	0.00	578.34	0.00	0.00	4,028.83	3,800.59	17,979.46
001-020	21,018.59	21,018.59	0.00	0.00	0.00	0.00	6,158.49	2,772.82	12,087.28
001-040	29,942.55	26,434.71	0.00	3,507.84	0.00	0.00	4,524.35	5,211.54	20,206.66
001-092	1,758.40	1,758.40	0.00	0.00	0.00	0.00	158.26	292.23	1,307.91
001-100	187,116.48	163,565.24	4,330.01	15,965.48	3,255.75	0.00	26,315.91	32,670.29	128,130.28
001-160	152,365.20	137,482.40	0.00	11,001.12	3,881.68	0.00	26,169.11	26,610.67	99,585.42
001-180	29,289.30	26,060.54	0.00	3,212.26	16.50	0.00	4,208.18	5,503.85	19,577.27
001-201	70,792.70	63,912.89	257.74	6,561.41	38.26	22.40	8,783.32	11,823.53	50,163.45
001-340	36,392.56	31,066.44	458.80	4,867.32	0.00	0.00	3,954.30	6,435.11	26,003.15
005-101	2,638.40	2,638.40	0.00	0.00	0.00	0.00	525.91	505.78	1,606.71
400-650	59,921.24	48,946.31	3,068.59	7,132.75	773.59	0.00	9,061.83	10,771.02	40,088.39
404-650	8,235.57	1,343.85	0.00	6,891.72	0.00	0.00	1,322.09	1,643.89	5,269.59
TOTALS	625,279.87	549,458.31	8,115.14	59,718.24	7,965.78	22.40	95,210.58	108,041.32	422,005.57

REGULAR INPUT: 268 MANUAL INPUT: 0 CHECK STUB COUNT: 2 DIRECT DEPOSIT STUB COUNT: 266

DEPT: ALL
PAYROLL NO#: 01
PAY PERIOD BEGINNING: 12/06/2024
PAY PERIOD ENDING: 12/19/2024

December 30, 2024 Supplemental Payroll

*** GRAND TOTALS ***

EARNINGS			BENF/REIMB		DEDUCTIONS				TAXES			
DESC	HRS	AMOUNT	DESC	AMOUNT	CD	ABBV	EMPLOYEE	EMPLOYER	DESC	TAXABLE	EMPLOYEE	EMPLOYER
REG	350.00	843.57			RET	RET	75.92	151.00	FED W/H	767.65	0.52	
									ST WH MS	767.65	0.00	
									FICA	843.57	52.30	52.30
									MEDI	843.57	12.24	12.24
TOTALS:	350.00	843.57		0.00			75.92	151.00			65.06	64.54

DEPARTMENT RECAP

DEPT NO#	GROSS	REGULAR	OVERTIME	LEAVE	OTHER	BENEFITS	DEDUCTIONS	TAXES	NET
400-650	843.57	843.57	0.00	0.00	0.00	0.00	75.92	65.06	702.59
TOTALS	843.57	843.57	0.00	0.00	0.00	0.00	75.92	65.06	702.59

REGULAR INPUT: 2 MANUAL INPUT: 0 CHECK STUB COUNT: 2 DIRECT DEPOSIT STUB COUNT: 0

PACKET: 20402 Regular Payments

VENDOR SET: 01

BANK : PYBK PAYROLL RELATED DISB

*** DRAFT/OTHER LISTING ***

December 2024 month End

VENDOR	NAME / I.D.	DESC	ITEM TYPE	PAID DATE	DISCOUNT	AMOUNT	ITEM NO#	ITEM AMOUNT
00010	STATE TAX COMMISSION							
	I-T2 202412099484	STATE TAX WITHHOLDING	D	12/31/2024		16,457.00CR	001076	
	I-T2 202412239617	STATE TAX WITHHOLDING	D	12/31/2024		16,113.00CR	001076	32,570.00
00011	GOVT EMPL DEFERRED COMP P							
	I-ANN202412099484	ANNUITY	D	12/31/2024		3,716.50CR	001077	
	I-ANN202412239617	ANNUITY	D	12/31/2024		5,254.50CR	001077	8,971.00
00029	CITY OF RIDGELAND PAYROLL							
	I-RET202412099484	RETIREMENT	D	12/31/2024		163,492.41CR	001078	
	I-RET202412239617	RETIREMENT	D	12/31/2024		166,608.91CR	001078	
	I-RET202412269625	RETIREMENT	D	12/31/2024		226.92CR	001078	330,328.24

* * T O T A L S * *	NO#	DISCOUNTS	CHECK AMT	TOTAL APPLIED
REGULAR CHECKS:	0	0.00	0.00	0.00
HANDWRITTEN CHECKS:	0	0.00	0.00	0.00
PRE-WRITE CHECKS:	0	0.00	0.00	0.00
DRAFTS:	3	0.00	371,869.24	371,869.24
VOID CHECKS:	0	0.00	0.00	0.00
NON CHECKS:	0	0.00	0.00	0.00
CORRECTIONS:	0	0.00	0.00	0.00
REGISTER TOTALS:	3	0.00	371,869.24	371,869.24

TOTAL ERRORS: 0 TOTAL WARNINGS: 0

PACKET: 20402 Regular Payments

VENDOR SET: 01 *** DRAFT/OTHER LISTING ***

BANK : PYBK PAYROLL RELATED DISB

VENDOR	NAME / I.D.	DESC	ITEM TYPE	PAID DATE	DISCOUNT	AMOUNT	ITEM NO#	ITEM AMOUNT

** POSTING PERIOD RECAP **

FUND	PERIOD	AMOUNT
001	12/2024	328,431.75CR
005	12/2024	3,663.89CR
400	12/2024	36,216.05CR
404	12/2024	3,557.55CR
ALL		371,869.24CR