MEETING OF THE
MAYOR AND BOARD OF ALDERMAN OF THE
CITY OF RIDGELAND, MISSISSIPPI
July 17, 2018
6:00 PM

INVOCATION

PLEDGE OF ALLEGIANCE

CONSIDERATION OF MINUTES FROM PRIOR BOARD MEETING

June 19, 2018 and July 3, 2018

CONSIDERATION OF MINUTES FROM PRIOR WORK SESSION

June 18, 2018 and July 2, 2018

1. AGENDA ITEMS

a) Pool Fence Variance Request as required by the Zoning Ordinance - 131 Green Glades - Larkin and Pam Carter

b) Architectural Review Ordinance Amendment - Restrictions to Building Façade Lighting

c) 100 Fox Run Drive - Cleaning of Private Property

2. CONSENT ITEMS

a) Architectural Review - C Spire Lighting Project (Blue)

b) Final Plat Amendment - Maple Place

c) Site Plan / Architectural Review for Shrimp Basket (former Shoney's Building on County Line Road)

d) Surplus Equipment - Fire Department

e) Approve Truck Route Renewal Permit (Round-a-bout) for Hemphill Construction

f) Approve Special Event Permit for Canopy Children's Solution - 5K 4Kids Canopy Care Run

g) Approve Special Event Permit for Ridgeland Parks and Recreation - Trunk or Treat

h) Approve Special Event Permit for Salvation Army Women's Auxiliary - Labor of Love 10K/5K

i) Approve Special Event Permit for Living Testament - Going Blue for Myositis

j) Approve Professional Services Agreement with Burns Cooley Dennis, Inc. for Geotechnical Services for Proposed Fitness Building

3. PAYMENT OF CLAIMS

a) 147448 - 147763 and July 6, 2018 Payroll ($1,122,996.89)

4. EXECUTIVE SESSION

ADJOURNMENT

INFORMATION FOR MAYOR AND BOARD

700 Towery Court Update

July 2018 Sales Tax Report

MEETING OF THE
MAYOR AND BOARD OF ALDERMAN OF THE
CITY OF RIDGELAND, MISSISSIPPI
June 19, 2018
6:00 PM

The Mayor opened the June 19, 2018 meeting of the Mayor and Board of Aldermen to order. Present were Alderman Chuck Gautier, Alderman Wesley Hamlin, Alderman Ken Heard, Alderman Kevin Holder, Alderman Brian Ramsey, Alderman D.I. Smith, Alderman Bill Lee, City Attorney Jerry Mills, City Attorney John Scanlon, and City Clerk Paula Tierce. The meeting was opened with an invocation by Alderman Wesley Hamlin followed by the pledge of allegiance.

****

The Mayor and Board of Aldermen were provided the May 2018 Financial Statement and the June 2018 Sales Tax Report.

****

Next came the recognition of Chris Ramsey for being selected Building Official of the Year. Mayor Gene McGee thanked Mr. Ramsey for his 26 1/2 years of service to the City of Ridgeland and Mr. Ramsey thanked the Mayor and Board of Aldermen for the opportunity to serve the City of Ridgeland.

****

Next came the recognition of Detective Sergeant Brett Bertucci for being selected Officer of the Month for May 2018. Mayor McGee informed the Board of Aldermen that on Saturday, May 26, 2018, Det./Sgt. Brett Bertucci was called out to investigate an assault that occurred on the Ridgeland multi-purpose trail near the intersection of Highway 51 and Rice Road. An unknown black male was reported to have groped a female as she was running on the trail. Det./Sgt. Bertucci immediately began gathering information, collecting evidence and following up on all possible leads to identify this suspect. Through Det./Sgt. Bertucci's relentless efforts, he was able to track down and identify a possible suspect. It was learned that the identified suspect was a registered sex offender and was on probation for a prior conviction of attempted rape through Hinds County. Det.Sgt. Bertucci, without hesitation, compiled a photo lineup and presented it to the victim who identified the suspect as her attacker. Warrants were immediately issued for the suspect's arrest and efforts began to locate him by Det./Sgt. Bertucci. The suspect subsequently surrendered to officers and is currently in the Madison County Jail awaiting a probation revocation hearing through the MS Department of Corrections. Mayor McGee thanked Det./Sgt. Bertucci for his hard work and dedication to the City of Ridgeland and encouraged him to keep the hard work. Det./Sgt. Bertucci thanked the Mayor and Board of Aldermen for the opportunity to serve.

Next came the matter of accepting the Minutes of the June 4, 2018 Work Session, the June 5, 2018 Board of Aldermen Meeting, and the June 11, 2018 Special Board of Aldermen Meeting. The Minutes were accepted with no corrections noted.

****

Next came the consideration of the Petition to Close and Vacate Certain Parts of a Street or Right of Way as Platted on Block 45, City of Ridgeland by Jackson Street Property Management, LLC. Alderman Wesley Hamlin moved to approve. The Motion was seconded by Alderman D.I. Smith and a vote was taken thereon as follows:

Vote: Aye(s): Alderman Chuck Gautier, Alderman Wesley Hamlin, Alderman Ken Heard, Alderman Kevin Holder, Alderman Brian Ramsey, Alderman D.I. Smith, Alderman

Bill Lee

Nay(s): None

Abstention(s): None

The Mayor then declared the Motion carried. A copy of the Ordinance is attached hereto as Exhibit "A".

****

Next came the consideration of the Architectural Review for Fill and Chill Awning Addition. Alderman Kevin Holder moved to approve with the use of Colonial Red for the awnings. The Motion was seconded by Alderman Chuck Gautier and a vote was taken thereon as follows:

Vote: Aye(s): Alderman Chuck Gautier, Alderman Ken Heard, Alderman Kevin Holder, Alderman Brian Ramsey, Alderman D.I. Smith, Alderman Wesley Hamlin, Alderman Bill Lee

Nay(s): None

Abstention(s): None

The Mayor then declared the Motion carried. A copy of the Architectural Review documents are attached hereto as Exhibit "B".

****

Next came the consideration of the Site Plan / Architectural Review for Rice Road Place. Alderman Kevin Holder moved to approve. The Motion was seconded by Alderman Chuck Gautier and a vote was taken thereon as follows:

Vote: Aye(s): Alderman Chuck Gautier, Alderman Ken Heard, Alderman Kevin Holder, Alderman Brian Ramsey, Alderman D.I. Smith

Nay(s): Alderman Wesley Hamlin, Alderman Bill Lee

Abstention(s): None

The Mayor then declared the Motion carried. A copy of the Site Plan/Architectural Review is attached hereto as Exhibit "C".

****

Next came the consideration of the Site Plan/Architecture Review for Costco Fuel Center - Renaissance Phase IV, including approval to utilize the slip ramp adjacent to the roundabout for northbound construction traffic to access I-55. John Shows, attorney present representing Costco, asked Alan Hart, Community Development Director, the following questions:

1. Has the City requested any information from the Applicant regarding the Costco Fuel Center that your department has not received? Mr. Hart responded "No, the City has

received everything that Community Development and Public Works requested."
2. Has the Applicant met all requirements for its site plan to be approved? Mr. Hart responded "Yes".
3. Has the Applicant met all requirements for the City's Development Review Procedure? Mr. Hart responded "Yes".
4. Is the site plan approval requirement for the City to issue a Building Permit? Mr. Hart responded "Yes".

Mr. Steve Maloney then made comments opposing the Costco Fuel Center's Site Plan/Architecture Review. Mr. Maloney entered pages 178-186 from the City of Ridgeland Zoning Ordinance, which is attached hereto as Exhibit "D". Mr. Maloney also entered into the record articles regarding Costco, which are attached hereto as Exhibit "E". Mr. Maloney offered for the record a petition signed by individuals, which is attached hereto as Exhibit "F". Objection was made to the introduction of the petition on the basis that it did not contain the signatures of the individuals to the extent it purported. The Mayor stated the petition included numerous forged, duplicate and other ineligible signatures addressed to the Mayor and Board of Aldermen. At that point, Mr. Maloney then proffered documents contained on a jump drive. The documents were not presented in advance nor were any written copies available prior to or during the meeting. The Mayor advised that we were not rehearing a zoning case and that documents in the record should be related to the issue of whether the site plan was appropriate. Mr. Maloney proffered the jump drive as a whole without any explanation of whether said documents related to issues proper in a site plan review or if so how and why. The records contained on the jump drive are attached hereto as Exhibit "G".

During discussions of the matter, Alderman Heard raised the question of whether any updated traffic study had been done. The Board was advised by one of the applicant's engineers that the traffic analysis had been updated to reflect the impact of traffic related to the site under consideration. He noted that this supplemental traffic study was submitted to the City. An inquiry was made by a Board member as to whether the new traffic update had been reviewed. Mike McCollum, Public Works Director, responded that it had been reviewed and found to address the issues for which it is required. Review of the updated traffic plan was considered as part of the professional staff's finding that the requirements of the site plan had been met in accordance with Ridgeland's ordinances.

Alderman Brian Ramsey stated that he thought the City had imposed higher standards for the look of the fueling station when it was proposed across the street. He was advised that the standards that were proposed at that time were under the stricter ordinance, which had been struck down by the Supreme Court. It was stated that the City could request enhancements it now lacks authority to demand standards that exceed the general architectural control ordinance.

Jerry Mills, City Attorney, provided legal advice to the Mayor and Board of Aldermen regarding the standards of granting or denying the site plan. City Attorney, Jerry Mills, discussed what was and what was not before the Board from a legal perspective. He explained that the matter being considered was whether to approve or disapprove a site plan. Because the property was legally zoned for the location of a service station or fueling station the standards considered for rezoning were not applicable. In the previous unrelated site plan approval request, the Board was advised of the findings of the Mississippi Supreme Court with regard to approval of the site plan specifically under the Ridgeland's ordinance. Mr. Mills read the following quote from Baymeadows, LLC v. City of Ridgeland, 131 So. 3d 1156, 1159-1160:

"Ridgeland's Development Review Procedures require development-review approval prior to the issuance of any building [* permit. The ordinances further provide that, "in addition to meeting all of the requirements of the Zoning Ordinance, any applicant for a building permit .... shall submit the following plans .....": (a) site plan; (b) a conceptual landscape plan; (c)

architectural drawings shall conform to the building codes; (d) signs shall conform to the ordinances; (e) conceptual grading and drainage plans shall conform to the ordinances; (f) such other data as may be required by the Building Official or City Engineer.

Mr. Mills reiterated the responsibilities of the Board.

At the end of the proceedings, Jerry Mills advised the Board that he understood that a letter may or may not have been circulated regarding a potential need for certain board members to recused themselves. Mr. Mills explained that he appreciated being given the opportunity to research the matter prior to it coming up during the meeting. He explained that he had conducted independent research prior to the meeting and had unofficially conferred with officials at the Ethics Commission. Mr. Mills then offered into the record opinions of the Mississippi Ethics Commission, which are attached hereto as Exhibit "H". It should be noted that no party made a request during the meeting that anyone recuse himself.

Alderman Wesley Hamlin moved to approve the Site Plan/Architecture Review for the Costco Fuel Center - Renaissance Phase IV, including approval to utilize the slip ramp adjacent to the roundabout for northbound construction traffic to access I-55. The motion was seconded by Alderman Chuck Gautier and a vote was taken thereon as follows:

Vote: Aye(s): Alderman Chuck Gautier, Alderman Wesley Hamlin, Alderman Kevin Holder, Alderman D.I. Smith

Nay(s): Alderman Ken Heard, Alderman Brian Ramsey, Alderman Bill Lee

Abstention(s): None

The Mayor then declared the Motion carried.

****

Next came the consideration of the items set out on the Consent Agenda. Alderman Brian Ramsey moved to approve the Consent Agenda:

a) - Table the Architectural Review for C Spire Lighting Project to the first Meeting in July - Order Attached Hereto As Exhibit "I"

b) - Architectural Review for Altar'd State - Renaissance at Colony Park - Order Attached Hereto As Exhibit "J"

c) - Site Plan / Architectural Review for Ridgeland Police Department Wellness Center - Order Attached Hereto As Exhibit "K"

d) - 705 Greenbrook Drive - Cost Resolution for re-entry cleanup relating to July 18, 2017 adjudication by the Mayor and Board of Aldermen - Resolution Attached Hereto As Exhibit "L"

e) - Approve Allen Engineering's Proposal to Update Risk Management Plan and Budget Amendment Decrease Public Utilities Fund Balance $6,000.00 and Increasing Account

400-650-600 (Engineering) - Resolution Attached Hereto As Exhibit "M"

f) - Accept Deed of Dedication and Temporary Construction Easement for Curtis Leroy Darty and George Darty on Sunnybrook Road - Order Attached Hereto As Exhibit "N"

g) - Approve Request for Authority to Advertise for Term Bids for Public Works - Order Attached Hereto As Exhibit "O"

h) - Approve Department of Environmental Quality Solid Waste Grant Agreement for Water Bottle Fillers - Order Attached Hereto As Exhibit "P"

i) - Approve Recommendation of Award for Residential Recycling Contract - Order Attached Hereto As Exhibit "Q"

j) - Approve East Lake Harbour Drive Rehabilitation Contractor Pay Request #3 - Order Attached Hereto As Exhibit "R"

k) - Budget Amendment Decreasing Account 001-000-272 $7500.00, Decreasing Account 001-201-577 $7,000.00, Decreasing Account 001-201-605 $1,234.00 and Increasing Account 001-201-604 for Household Hazardous Day - Resolution Attached Hereto As Exhibit "S"

l) - Request Authorization to Advertise for Traffic Signal Video Detection System Equipment - Order Attached Hereto As Exhibit "T"

m) - Declare Temple, Inc. Sole Source Provider for Clary Corporation's Traffic Uninterruptible Power System - Order Attached Hereto As Exhibit "U"

n) - Approve Special Event Permit for Ridgeland Fire Department - 911 Hero Run - Order Attached Hereto As Exhibit "V"

o) - Approve Non-compensated Special Contract Investigator (SCI) Contract with MS Bureau of Narcotics - Order Attached Hereto As Exhibit "W"

p) - Accept Donation from Southeastern Financial and Cline Tours to the Ridgeland Police Department - Order Attached Hereto As Exhibit "X"

q) - Receive May 2018 Privilege License Report - Order Attached Hereto As Exhibit "Y"

r) - Approve Central Bidding being the Provider for Electronic Bidding and Reverse Auction for the City of Ridgeland - Order Attached Hereto As Exhibit "Z"

The motion was seconded by Alderman Bill Lee and a vote was taken thereon as follows:

Vote: Aye(s): Alderman Chuck Gautier, Alderman Wesley Hamlin, Alderman Ken Heard, Alderman Kevin Holder, Alderman Brian Ramsey, Alderman D.I. Smith, Alderman Bill Lee

Nay(s): None

Abstention(s): None

The Mayor then declared the Motion carried.

****

Next came the payment of Claims 146816 - 147154 and June 8, 2018 Payroll. Alderman D.I. Smith moved to approve. The Motion was seconded by Alderman Chuck Gautier and a vote was taken thereon as follows:

Vote: Aye(s): Alderman Chuck Gautier, Alderman Wesley Hamlin, Alderman Ken Heard, Alderman Kevin Holder, Alderman Brian Ramsey, Alderman D.I. Smith, Alderman Bill Lee

Nay(s): None

Abstention(s): None

The Mayor then declared the Motion carried.

****

The Mayor announced the need of going into Closed Session to discuss the need of going into Executive Session to discuss pending litigation. Alderman Kevin Holder moved to go into Closed Session to discuss the need of going into Executive Session to discuss pending litigation. Alderman Brian Ramsey seconded the motion and a vote was taken thereon as follows:

Vote: Aye(s): Alderman Chuck Gautier, Alderman Wesley Hamlin, Alderman Ken Heard, Alderman Kevin Holder, Alderman Brian Ramsey, Alderman D.I. Smith, Alderman Bill Lee

Nay(s): None

Abstention(s): None

The Mayor then declared the Motion carried.

CLOSED SESSION

Alderman Kevin Holder moved to go into Executive Session to discuss pending litigation. The motion was seconded by Alderman Brian Ramsey and a vote was taken thereon as follows:

Vote: Aye(s): Alderman Chuck Gautier, Alderman Wesley Hamlin, Alderman Ken Heard, Alderman Kevin Holder, Alderman Brian Ramsey, Alderman D.I. Smith, Alderman Bill Lee

Nay(s): None

Abstention(s): None

The Mayor then declared the Motion carried.

EXECUTIVE SESSION

Alderman Wesley Hamlin moved to approve the Settlement Agreement and Release Agreement between the Ridgeland Ranch Apartments and the City of Ridgeland. The motion was seconded by Alderman Kevin Holder and a vote was taken thereon as follows:

Vote: Aye(s): Alderman Chuck Gautier, Alderman Wesley Hamlin, Alderman Ken Heard, Alderman Kevin Holder, Alderman Brian Ramsey, Alderman D.I. Smith, Alderman Bill Lee

Nay(s): None

Abstention(s): None

The Mayor then declared the Motion carried. A copy of the Settlement and Release Agreement is attached hereto as Exhibit "AA".

Alderman Brian Ramsey move to leave Executive Session. The motion was seconded by Alderman D. I. Smith and a vote was taken thereon as follows:

Vote: Aye(s): Alderman Chuck Gautier, Alderman Wesley Hamlin, Alderman Ken Heard, Alderman Kevin Holder, Alderman Brian Ramsey, Alderman D.I. Smith, Alderman Bill Lee

Nay(s): None

Abstention(s): None

The Mayor then declared the Motion carried.

****

The Mayor announced the Board of Aldermen approved a Settlement and Release Agreement between Ridgeland Ranch Apartments and the City of Ridgeland during the Executive Session.

There being no further business, the Mayor adjourned the meeting at 7:10 p.m. and announced that the City Clerk would be providing some information regarding the Fiscal Year 2019 budget.

WITNESS MY SIGNATURE, the _____ day of July, 2018.

_____
GENE F. MCGEE, MAYOR

ATTEST:

_____
PAULA TIERCE, CITY CLERK

MEETING OF THE
MAYOR AND BOARD OF ALDERMAN OF THE
CITY OF RIDGELAND, MISSISSIPPI
July 3, 2018
6:00 PM

The Mayor opened the July 3, 2018 meeting of the Mayor and Board of Aldermen to order. Present were Alderman Chuck Gautier, Alderman Wesley Hamlin, Alderman Ken Heard (via telephone), Alderman Kevin Holder, Alderman Brian Ramsey, Alderman D.I. Smith, Alderman Bill Lee, City Attorney Jerry Mills, and City Clerk Paula Tierce. The meeting was opened with an invocation by Mayor Gene McGee followed by the pledge of allegiance.

****

The Mayor announced that the City received an award by the Mississippi Tobacco Free Coalition for adding e-cigarettes to the City's ordinance at the MML Annual Convention.

****

Next came the recognition of the City of Ridgeland being named Healthy Hometown by Blue Cross Blue Shield. Mayor McGee announced that this was the second time the City of Ridgeland has received this award, the first being in 2013. Mayor McGee stated that the Blue Cross Blue Shield would be awarding a $50,000 check and that the Healthy Hometown Committee would meet and make recommendations as to how the money would be spent. Mayor McGee introduced the Healthy Hometown Committee members that were present, being Lynda Assink, Rochelle Culp, Adam Frazier, Alderman Kevin Holder, Adam Lien, John Pigg, Dr. Timothy Quinn, Rhonda Shirley, Alderman D. I. Smith, Lisa Walters, and Officer Scott Young.

****

Next came the request to reconsider the Architectural Review for Fill and Chill Awning Addition. Alderman Kevin Holder moved to rescind the approval of the Colonial Red that was approved by the Board of Aldermen on June 19, 2018 and approve the bronze color recommended by Architectural Review Board. The Motion was seconded by Alderman D.I. Smith and a vote was taken thereon as follows:

Vote: Aye(s): Alderman Chuck Gautier, Alderman Wesley Hamlin, Alderman Ken Heard, Alderman Kevin Holder, Alderman Brian Ramsey, Alderman D.I. Smith, Alderman Bill Lee

Nay(s): None

Abstention(s): None

The Mayor then declared the Motion carried.

****

(Alderman Chuck Gautier left the meeting and recused himself of the following item.)

Next came the consideration of the Petition to Close and Vacate A Certain Unimproved and Unused Street and Right-of-Way. Alderman Brian Ramsey moved to approve contingent on any existing City easements and right-of-way that are being utilized staying in place and remaining the property of the City of Ridgeland. The Motion was seconded by Alderman D.I. Smith and a vote was taken thereon as follows:

Vote: Aye(s): Alderman Wesley Hamlin, Alderman Ken Heard, Alderman Kevin Holder, Alderman Brian Ramsey, Alderman D.I. Smith, Alderman Bill Lee

Nay(s): None

Absent: Alderman Chuck Gautier

The Mayor then declared the Motion carried. A copy of the Ordinance is attached hereto as Exhibit "A".

****

(Alderman Chuck Gautier rejoined the meeting.)

Next came the consideration of the items set out on the Consent Agenda. Kevin Holder moved to approve the Consent Agenda:

a) - Appoint Jerry Mills City Attorney Pursuant to Provisions of Section 21-15-23 of the Mississippi Code, Annotated - Order Attached Hereto As Exhibit "B"

b) - Ratify Interlocal Cooperation Agreement Between Madison County, Mississippi and the City of Ridgeland, Mississippi Regarding Funding of Certain Street Improvements Dated July 5, 2016 - Order Attached Hereto As Exhibit "C".

c) - Approve Renewal of Jackson Street Parking Lot Landscaping Contract with U.S. Lawns - Order Attached Hereto As Exhibit "D"

d) - Approve New Landscaping Contract for Harbor Drive & City Entrance with U.S. Lawns - Order Attached Hereto As Exhibit "E"

e) - Approve East Lake Harbour Drive Rehabilitation Engineering Pay Estimate #4 - Order Attached Hereto As Exhibit "F

f) - Approve Lake Harbour Drive Extension Preliminary Engineering Estimate #56 - Order Attached Hereto As Exhibit "G"

g) - Approve EMCSDS Budget Transfer - Resolution Attached Hereto As Exhibit "H"

h) - Approve Memorandum of Agreement Between MBN, HIDTA and Ridgeland Police Department - Order Attached Hereto As Exhibit "I"

i) - Approve Special Event Permit for The Warrior Bonfire Program - Out of Bounds Cornhole Classic - Order Attached Hereto As Exhibit "J"

j) - Table the Architectural Review for C Spire Lighting Project to the second Meeting in July - Order Attached Hereto As Exhibit "K"

The motion was seconded by Alderman Bill Lee and a vote was taken thereon as follows:

Vote: Aye(s): Alderman Chuck Gautier, Alderman Wesley Hamlin, Alderman Ken Heard, Alderman Kevin Holder, Alderman Brian Ramsey, Alderman D.I. Smith, Alderman Bill Lee

Nay(s): None

Abstention(s): None

The Mayor then declared the Motion carried.

****

Next came the payment of Claims 147155 - 147447 Excluding Costco related charges in Claim 147334 and June 22, 2018 Payroll ($2,457,886.05). Alderman Kevin Holder moved to approve. The Motion was seconded by Alderman D.I. Smith and a vote was taken thereon as follows:

Vote: Aye(s): Alderman Chuck Gautier, Alderman Wesley Hamlin, Alderman Ken Heard, Alderman Kevin Holder, Alderman Brian Ramsey, Alderman D.I. Smith, Alderman Bill Lee

Nay(s): None

Abstention(s): None

The Mayor then declared the Motion carried.

****

Next came the payment of the Costco related charges in Claim 147334 ($2,865.00). Alderman Wesley Hamlin moved to approve. The Motion was seconded by Alderman Chuck Gautier and a vote was taken thereon as follows:

Vote: Aye(s): Alderman Chuck Gautier, Alderman Wesley Hamlin, Alderman Kevin Holder, Alderman D.I. Smith

Nay(s): Alderman Ken Heard, Alderman Brian Ramsey, Alderman Bill Lee

Abstention(s): None

The Mayor then declared the Motion carried.

****

The Mayor announced the need to go into Closed Session to discuss the need of going to Executive Session to discuss pending litigation. Alderman Brian Ramsey moved to go into Closed Session to discuss the need of going into Executive Session to discuss pending litigation. The motion was seconded by Alderman Kevin Holder and a vote was taken thereon as follows:

Vote: Aye(s): Alderman Chuck Gautier, Alderman Wesley Hamlin, Alderman Ken Heard, Alderman Kevin Holder, Alderman Brian Ramsey, Alderman D.I. Smith, Alderman Bill Lee

Nay(s): None

Abstention(s): None

The Mayor then declared the Motion carried.

CLOSED SESSION

Alderman Chuck Gautier moved to go into Executive Session to discuss pending litigation. Alderman Wesley Hamlin seconded the motion and a vote was taken thereon as follows:

Vote: Aye(s): Alderman Chuck Gautier, Alderman Wesley Hamlin, Alderman Ken Heard, Alderman Kevin Holder, Alderman Brian Ramsey, Alderman D.I. Smith, Alderman Bill Lee

Nay(s): None

Abstention(s): None

The Mayor then declared the Motion carried.

EXECUTIVE SESSION

Alderman Chuck Gautier moved to expand the Letter of Engagements with Wells, Marble & Hurst to include the Beard III litigation. Alderman Wesley Hamlin seconded the motion and a vote was taken thereon as follows:

Vote: Aye(s): Alderman Chuck Gautier, Alderman Wesley Hamlin, Alderman Kevin Holder, Alderman Brian Ramsey, Alderman D.I. Smith, Alderman Bill Lee

Nay(s): None

Abstention(s): Alderman Ken Heard

The Mayor then declared the Motion carried.

Alderman Kevin Holder moved to leave Executive Session. The motion was seconded by Alderman Chuck Gautier and a vote was taken thereon as follows:

Vote: Aye(s): Alderman Chuck Gautier, Alderman Wesley Hamlin, Alderman Ken Heard, Alderman Kevin Holder, Alderman Brian Ramsey, Alderman D.I. Smith, Alderman Bill Lee

Nay(s): None

Abstention(s): None

The Mayor then declared the Motion carried.

The meeting was reopened and the Mayor announced the action taken by the Board of Aldermen during the Executive Session.

There being no further business before the Board of Aldermen, the Mayor adjourned the meeting at 6:30 p.m.

WITNESS MY SIGNATURE, my signature this the _____ day of July, 2018.

_____
GENE F. MCGEE, MAYOR

ATTEST:

_____
PAULA TIERCE, CITY CLERK

MINUTES OF THE WORK SESSION
OF THE MAYOR AND BOARD OF ALDERMEN
OF THE CITY OF RIDGELAND
JULY 2, 2018
6:00 P.M.

The Mayor opened the work session of July 2, 2018 of the Mayor and Board of Aldermen. Present were Alderman Bill Lee, Alderman Kevin Holder, Alderman Wesley Hamlin, Alderman Brian Ramsey, Alderman Chuck Gautier, City Attorney Jerry Mills, and City Clerk Paula Tierce. Absent was Alderman Ken Heard and Alderman D. I. Smith.

The Mayor presented the proposed agenda. Item "a" under the Consent Agenda was amended to read "Appoint Jerry Milly City Attorney Pursuant to Provisions of Section 21-15-23 of the Mississippi Code, Annotated. Mayor McGee informed the Board of Aldermen of a Petition to Close and Vacate A Certain Unimproved and Unused Street and Right-of-Way that needed to be added to the agenda per the request of Alderman Chuck Gautier. Alderman Chuck Gautier departed the meeting at 6:20 p.m. Each item was discussed with no action being taken by the Mayor & Board of Aldermen.

Alderman Chuck Gautier rejoined the meeting for the update on 700 Towery Court was given by Community Development Alan Hart.

The meeting concluded at 6:25 p.m.

WITNESS MY SIGNATURE, this the _____ day of July, 2018.

_____
Mayor Gene F. McGee

ATTEST:

_____
Paula Tierce, City Clerk

MINUTES OF THE WORK SESSION
OF THE MAYOR AND BOARD OF ALDERMEN
OF THE CITY OF RIDGELAND
JUNE 18, 2018
6:00 P.M.

The Mayor opened the work session of June 18, 2018 of the Mayor and Board of Aldermen. Present were Alderman D. I. Smith, Alderman Bill Lee, Alderman Kevin Holder, Alderman Wesley Hamlin, Alderman Brian Ramsey, Alderman Chuck Gautier, City Attorney Jerry Mills, and City Clerk Paula Tierce. Absent was Alderman Ken Heard.

The Mayor presented the proposed agenda. Item "d" under the Consent Agenda was moved to the Agenda Items. Community Development Director Alan Hart provided the Design Guidelines for Renaissance Phase IV, which is attached hereto as Exhibit "B". Item "m" under Consent Agenda was removed due to being a duplicate of item "k". Alderman Chuck Gautier departed the meeting at 6:30 p.m. Each item was discussed with no action being taken by the Mayor & Board of Aldermen.

An update on 700 Towery Court was given by Community Development Alan Hart.

The meeting concluded at 6:50 p.m.

WITNESS MY SIGNATURE, this the _____ day of June, 2018.

_____
Mayor Gene F. McGee

ATTEST:

_____
Paula Tierce, City Clerk

Mayor and Board of Aldermen
City of Ridgeland
304 Highway 51
Ridgeland, MS 39157

We are requesting a variance regarding fence height around our back yard swimming pool at 131 Green Glades, ordinance 210.05. Our back yard including the newly installed in ground pool is enclosed by a 4 foot steel and iron fence. On one side this fence belongs to our next door neighbor and has been in place for greater than 5 years. The remaining steel fence has been in place for 4 years, put in by us at significant expense. Please tell us how to proceed from this point. Thank you.

Larkin and Pam Carter

ORDINANCE AMENDING THE ARCHITECTURAL REVIEW ORDINANCE OF THE CITY OF RIDGELAND, MISSISSIPPI

WHEREAS, the Mayor and Board of Aldermen of the City of Ridgeland, Mississippi did lawfully adopt an Architectural Review Ordinance on January 18, 1994; and

WHEREAS, the Mayor and Board of Aldermen of the City of Ridgeland, Mississippi have a desire to amend the Architectural Review Ordinance to establish certain standards to govern the use of colored or tinted lights on building facades; and

NOW THEREFORE BE IT RESOLVED, the Mayor and Board of Aldermen find that the Preamble of this amendment is true and correct and adopt the following sections as amendments to the Architectural Review Ordinance of the City of Ridgeland, Mississippi:

Section 1

Restrictions to Building Facade Lighting

The purpose of building facade lighting is to enhance the visual appeal of the property as well as increasing the capacity for visual surveillance. These standards are also meant to limit the impact of the lighting onto adjacent properties.

Colored or Tinted Lighting on Building Facades:

- Shall be limited to MU-1 Zoning classification.
- Shall be limited to buildings with a minimum height of *48 feet*.
- Shall not be allowed on any building located on a property within *400 feet* from any residential property; measured from closest point of property line to the closest point of the lighted building.
- Shall not be allowed on any building located on a property within *400 feet* from any school or church property unless a waiver is granted by said use; measured from closest point of property line to the closest point of the lighted building.
- Shall not be allowed on any building located within *400 feet* of an interstate right-of-way; measured from closest point of the interstate right-of-way line to the closest point of the lighted building.
- Shall be limited to the architectural façade of the building and shall terminate at or before the top of said building or be directed downward.
- Shall NOT be applied to or appear on the lower *30 feet* of any building; measured from finished floor of first level to fixture.
- Maximum illumination on any vertical surface not exceed *5 footcandles*.
- Shall not be applied to or appear on any roof and no bulb or fixture shall be visible from any street or neighboring property from ground level.

Section 2

The City of Ridgeland, Mississippi, Architectural Review Ordinance is hereby amended to reflect the foregoing changes from and after thirty (30) days from the date of the adoption by the Board.

SO ORDAINED by the Mayor and Board of Aldermen of the City of Ridgeland, Mississippi at a meeting thereof held on the _____ day of _____, 2018.

The ordinance, having been first reduced to writing, was offered for adoption by Alderman _____ and seconded by Alderman _____ and submitted to the Board of Aldermen for passing or rejection on roll call vote with the following results:

Alderman Ken Heard (Ward 1) voted: _____

Alderman Chuck Gautier (Ward 2) voted: _____

Alderman Kevin Holder (Ward 3) voted: _____

Alderman Brian Ramsey (Ward 4) voted: _____

Alderman Bill Lee (Ward 5) voted: _____

Alderman Wesley Hamlin (Ward 6) voted: _____

Alderman D. I. Smith (At-large) voted: _____

WHEREUPON, the Mayor declared the Motion had carried and the Ordinance adopted this the ____— day of _____, 2018.

_____

Gene F. McGee, Mayor
City of Ridgeland, Mississippi

ATTEST:

_____

Paula Tierce, City Clerk

[SEAL]

06.11.2018 10:59

06.11.2018 10:57

06.11.2018 10:58

MEMORANDUM

To: Mayor and Board of Aldermen

From: Georgia Trebisky, Code Enforcement Manager
Community Development Department

Date: June 29, 2018

Re: Code Enforcement

Pursuant to State Statute 21-19-11, I recommend that the Mayor and Board of Aldermen conduct a hearing for Cleaning of Private Property for the following property to determine if this property is in need of cleaning due to various health, safety, and welfare hazards. Please see attached files for notice requirements and reference of the violations at this property.

100 Fox Run Drive – (David and Kay Howell)

Thank you for your consideration of this matter. Please contact me if you have any questions.

the city of RIDGELAND

community development

June 29, 2018

NOTICE OF HEARING

To: David & Kay Howell
P.O. Box 1279
Madison, MS 39110

You have been made a party in a hearing to be conducted before the Mayor and Board of Aldermen of the City of Ridgeland, Mississippi to determine pursuant to Mississippi Code 21-19-11 whether a parcel of land located at **100 Fox Run Drive, Ridgeland, MS 39157,** owned by you, is in such a state of uncleanliness to be a menace to the public health, safety, and/or welfare of the community.

It is in your best interest to be present before the Mayor and Board of Aldermen of the City of Ridgeland at its meeting dated **Tuesday, July 17, 2018, at 6:00p.m.** at the Ridgeland City Hall, 304 Highway 51, Ridgeland, Mississippi 39157, wherein the determination of whether your property is a menace to public health and safety of the community will be made. Should you not be present, a finding that it is a menace to the public health, safety, and/or welfare of the community may be made. Adjudication at this hearing will authorize the City of Ridgeland to enter and clean this property, and all costs associated with the cleaning may become a civil debt against you or become an assessment against the property. Adjudication would also authorize the City of Ridgeland to re-enter and clean the property for a period of two (2) years after the hearing without any further hearing if notice is posted on the property or parcel of land and at Ridgeland City Hall or another place in the municipality where such notices are generally posted at least seven (7) days before the property or parcel of land is re-entered for cleaning.

Should you have any questions prior to the scheduled hearing, please contact **Georgia Trebisky, City of Ridgeland Code Enforcement Manager**, at 601-856-3877 during normal business hours.

Issued under my hand, this the 29TH day of JUNE, 2018.

CITY OF RIDGELAND, MISSISSIPPI

BY:_____

mailing address: p.o. box 217 • ridgeland, ms 39158
street address: 304 highway 51 • ridgeland, ms 39157
ph: 601.856.7113 • www.ridgelandms.org

Gene F. McGee, cmo - mayor • Alan Hart, rla, asla - director of community development

board of aldermen: D.I. Smith, cmo - at-large • Ken Heard, cmo - ward 1 • Chuck Gautier, cmo - ward 2
Kevin Holder, cmo, mayor pro tempore - ward 3 • Brian P. Ramsey, cmo - ward 4 • Bill Lee - ward 5 • Wesley Hamlin, cmo - ward 6

07.11.2018 10:17

the city of RIDGELAND
community development

June 29, 2018

NOTICE OF HEARING

To: David & Kay Howell
P.O. Box 1279
Madison, MS 39110

You have been made a party in a hearing to be conducted before the Mayor and Board of Aldermen of the City of Ridgeland, Mississippi to determine pursuant to Mississippi Code 21-19-11 whether a parcel of land located at **100 Fox Run Drive, Ridgeland, MS 39157**, owned by you, is in such a state of uncleanliness to be a menace to the public health, safety, and/or welfare of the community.

It is in your best interest to be present before the Mayor and Board of Aldermen of the City of Ridgeland at its meeting dated **Tuesday, July 17, 2018, at 6:00p.m.** at the Ridgeland City Hall, 304 Highway 51, Ridgeland, Mississippi 39157, wherein the determination of whether your property is a menace to public health and safety of the community will be made. Should you not be present, a finding that it is a menace to the public health, safety, and/or welfare of the community may be made. Adjudication at this hearing will authorize the City of Ridgeland to enter and clean this property, and all costs associated with the cleaning may become a civil debt against you or become an assessment against the property. Adjudication would also authorize the City of Ridgeland to re-enter and clean the property for a period of two (2) years after the hearing without any further hearing if notice is posted on the property or parcel of land and at Ridgeland City Hall or another place in the municipality where such notices are generally posted at least seven (7) days before the property or parcel of land is re-entered for cleaning.

Should you have any questions prior to the scheduled hearing, please contact **Georgia Treblsky, City of Ridgeland Code Enforcement Manager**, at 601-856-3877 during normal business hours.

Issued under my hand, this the 29TH day of JUNE, 2018.

CITY OF RIDGELAND, MISSISSIPPI

BY: _____

mailing address: p.o. box 217 • ridgeland, ms 39158
street address: 304 highway 51 • ridgeland, ms 39157
ph: 601.856.7113 • www.ridgelandms.org

Gene F. McGee, cmo • mayor • Alan Hart, ifa, aicp • director of community development
board of aldermen: D.I. Smith, cmo • at-large • Ken Heard, cmo • ward 1 • Chuck Gautier, cmo • ward 2
Kevin Holder, cmo, mayor pro tempore • ward 3 • Brian P. Ramsey, cmo • ward 4 • Bill Lee • ward 5 • Wesley Hamlin, cmo • ward 6

07 · 11 · 2018 10:08

MINUTES OF A MEETING OF THE ARCHITECTURAL REVIEW BOARD OF THE CITY OF RIDGELAND, MISSISSIPPI

A meeting of the Architectural Review Board of the City of Ridgeland, Mississippi, (the "Board"), was duly called, held, and conducted on Tuesday, May 22, 2018, at 6:00 o'clock P.M. in the Ridgeland City Hall in the City of Ridgeland, Madison County, Mississippi.

The following members were present, to-wit:
Bill Dicken, Chairman
Connie Suber
Randy Lynn
Lynette Praytor
Ron Blaylock

Members Absent:
Glenn Ray
David Dunbar
Randy Knouse

Also attending:
Jordan Lohman, City Planner

The meeting was called to order by Chairman Dicken. Chairman Dicken led the invocation. It was determined by the members present that there was a quorum.

The first item on the agenda was **CSPIRE LIGHTING.** The project was presented by **Mr. Jason Ellis** with **Ellis Construction Services**. The project is located at **1018 Highland Colony Parkway.** The applicant is requesting approval to add color changing lights to the exterior of the building.

Chairman Dicken opened the floor for a motion. Randy Lynn made a motion to approve the project as submitted as a 'major' agenda item. Lynette Praytor seconded the motion and a vote was taken thereon as follows:

David Dunbar	Absent
Randy Lynn	Aye
Ron Blaylock	Aye
Lynette Praytor	Aye
Randy Knouse	Absent
Glenn Ray	Absent
Connie Suber	Aye

Chairman Dicken then declared the motion to approve the project carried.

The second item on the agenda was **MISSISSIPPI SCHOOL BOARD ASSOCIATION.** The project was presented by **Mr. Gary Bailey** with **Bailey Architecture**. The project is located at **380 Zurich Drive.** The applicant is requesting approval to make building and site improvements.

Chairman Dicken opened the floor for a motion. Ron Blaylock made a motion to approve the project as submitted as a 'minor' agenda item. Connie Suber seconded the motion and a vote was taken thereon as follows:

David Dunbar	Absent
Randy Lynn	Aye
Ron Blaylock	Aye
Lynette Praytor	Aye
Randy Knouse	Absent
Glenn Ray	Absent
Connie Suber	Aye

Chairman Dicken then declared the motion to approve the project carried.

The third item on the agenda was **RICE ROAD RETAIL.** The project was presented by **Mr. Pradip Biswas**. The project is located at **Rice Road and Huntington Place.** The applicant is requesting approval to construct a new commercial development.

Chairman Dicken opened the floor for a motion. Ron Blaylock made a motion to approve the project as submitted as a 'major' agenda item. Lynette Praytor seconded the motion and a vote was taken thereon as follows:

David Dunbar	Absent
Randy Lynn	Aye
Ron Blaylock	Aye
Lynette Praytor	Aye
Randy Knouse	Absent
Glenn Ray	Absent
Connie Suber	Aye

Chairman Dicken then declared the motion to approve the project carried.

The fourth item on the agenda was **RANGER LABEL.** The project was presented by **Mr. Alan Hare** with **Ranger Label**. The project is located at **286 Commerce Park Drive.** The applicant is requesting approval to construct a building addition.

Chairman Dicken opened the floor for a motion. Lynette Praytor made a motion to approve the project as submitted as a 'minor' agenda item. Randy Lynn seconded the motion and a vote was taken thereon as follows:

David Dunbar	Absent
Randy Lynn	Aye
Ron Blaylock	Aye
Lynette Praytor	Aye
Randy Knouse	Absent
Glenn Ray	Absent
Connie Suber	Aye

Chairman Dicken then declared the motion to approve the project carried.

The fifth item on the agenda was **MAC'S FRESH MARKET PHARMACY.** The project was presented by **Mrs. Erin Martinez**. The project is located at **398 Highway 51.** The applicant is requesting approval to add a walk-up pharmacy window to the existing building.

Chairman Dicken opened the floor for a motion. Connie Suber made a motion to approve the project as submitted as a 'minor' agenda item. Ron Blaylock seconded the motion and a vote was taken thereon as follows:

David Dunbar	Absent
Randy Lynn	Aye
Ron Blaylock	Aye
Lynette Praytor	Aye
Randy Knouse	Absent
Glenn Ray	Absent
Connie Suber	Aye

Chairman Dicken then declared the motion to approve the project carried.

The minutes from the May 8, 2018 meeting were then read and approved by the board. There being no further business to come before the board, the meeting was adjourned.

_____
Bill Dicken, Chairman

ATTEST:

_____
Connie Suber, Secretary

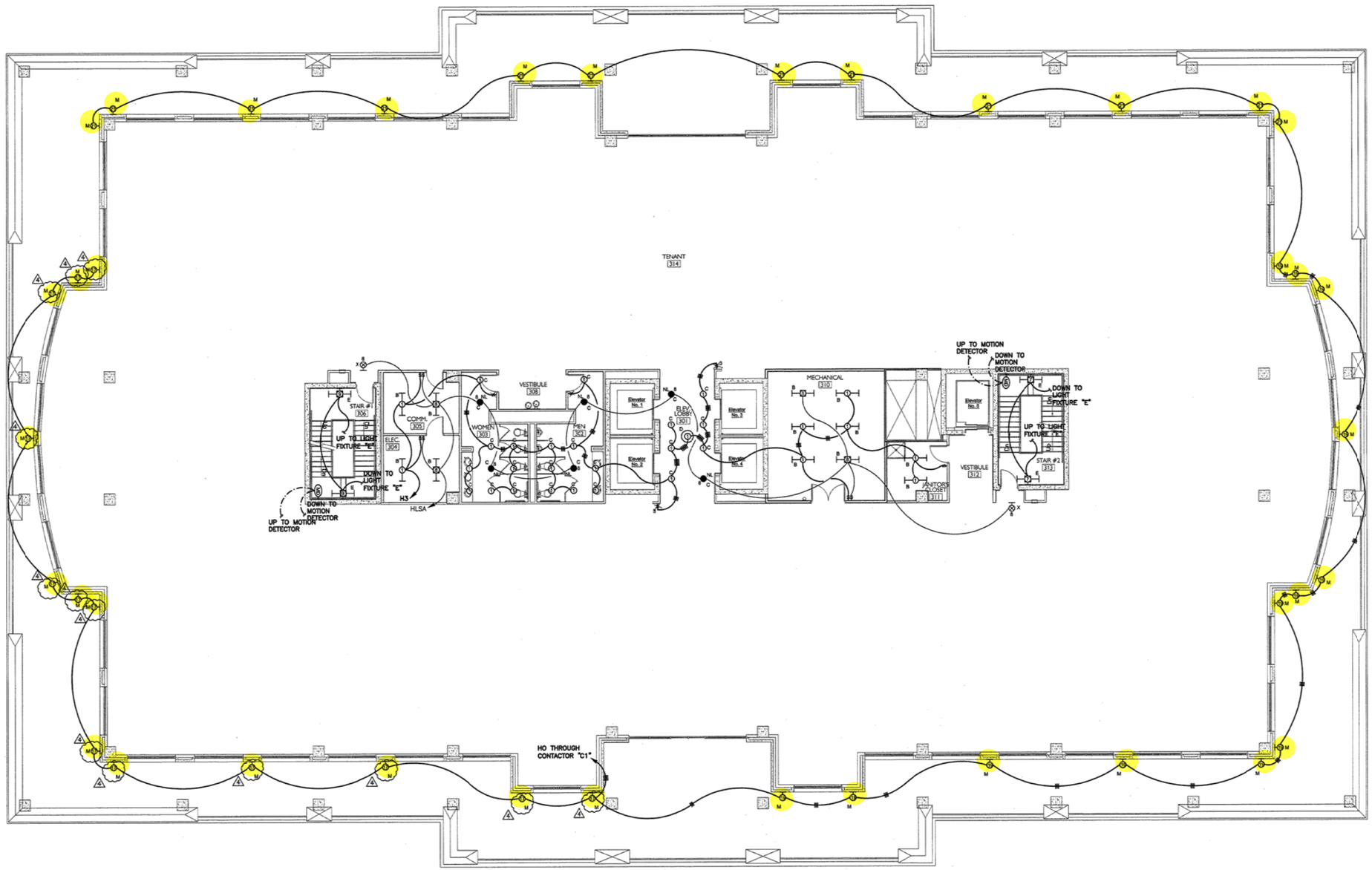

1 / E1.3 **LEVEL 3 - LIGHTING PLAN**

Scale: 1/8" = 1'

THE POWER SOURCE
945 MADISON AVE.
MADISON, MS 39110
VOICE (601) 605-4829
FAX (601) 605-4875
ACENG2000@AOL.COM

DALE AND ASSOCIATES ARCHITECTS P.A.
One Jackson Place, Suite 250
188 E. Capitol Street
Jackson, MS 39201-2100
P: 601.352.5362

CHRISTOPHER L. GREEN
REGISTERED PROFESSIONAL ENGINEER
16778
STATE OF MISSISSIPPI

300 Renaissance at Colony Park

300 Renaissance, LLC
Ridgeland, MS

Project No.:	05090
Date:	03 MARCH 2006
Drawn by:	STT
Checked:	CLG
Revisions:	
Revisions:	
Revisions:	
Revisions:	

E1.3

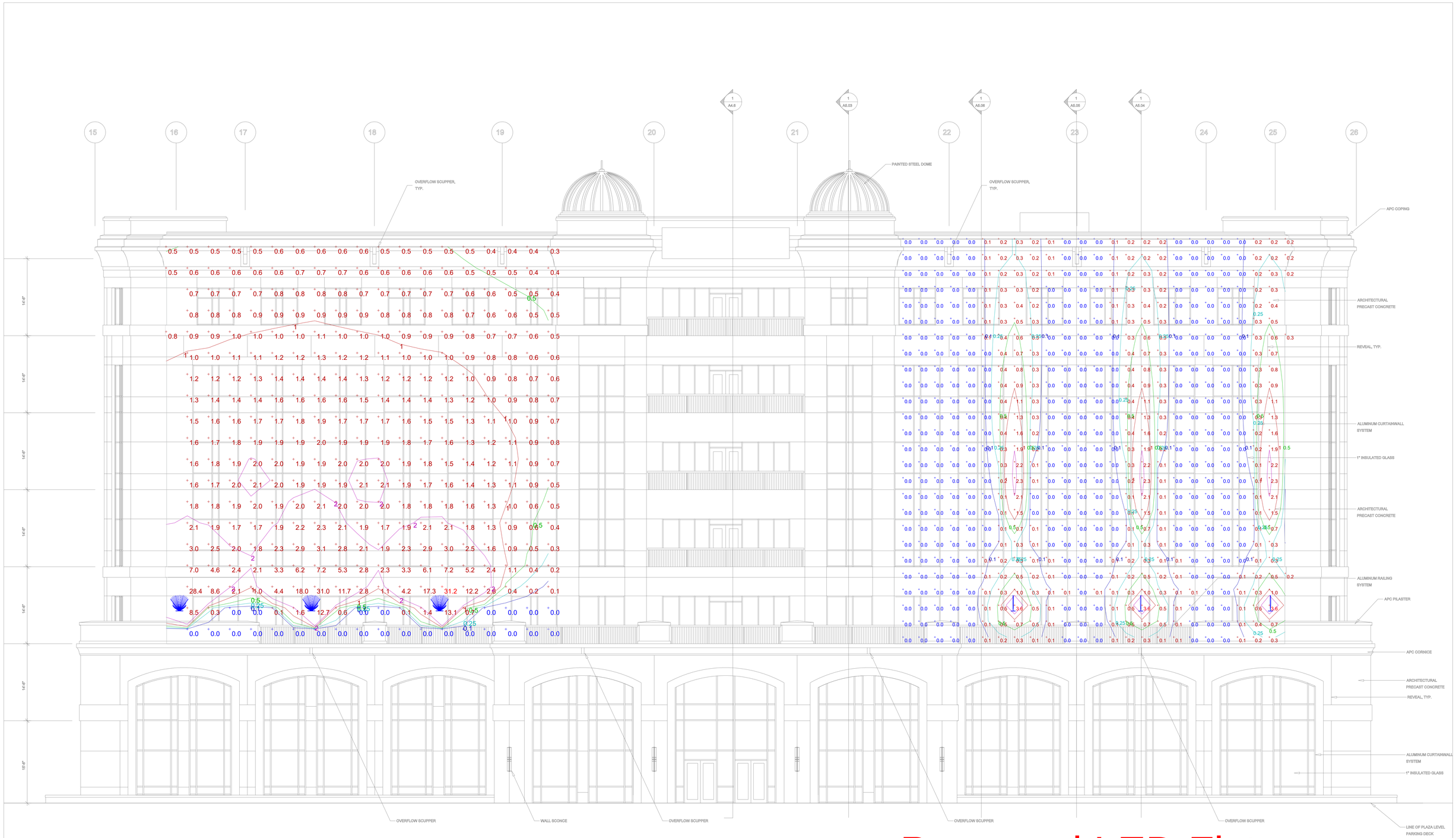

Original Metal Halide Fixtures

Proposed LED Fixtures

1 LAYOUT1 LIGHTING CALCULATIONS

Scale: 1/8" = 1'-0"

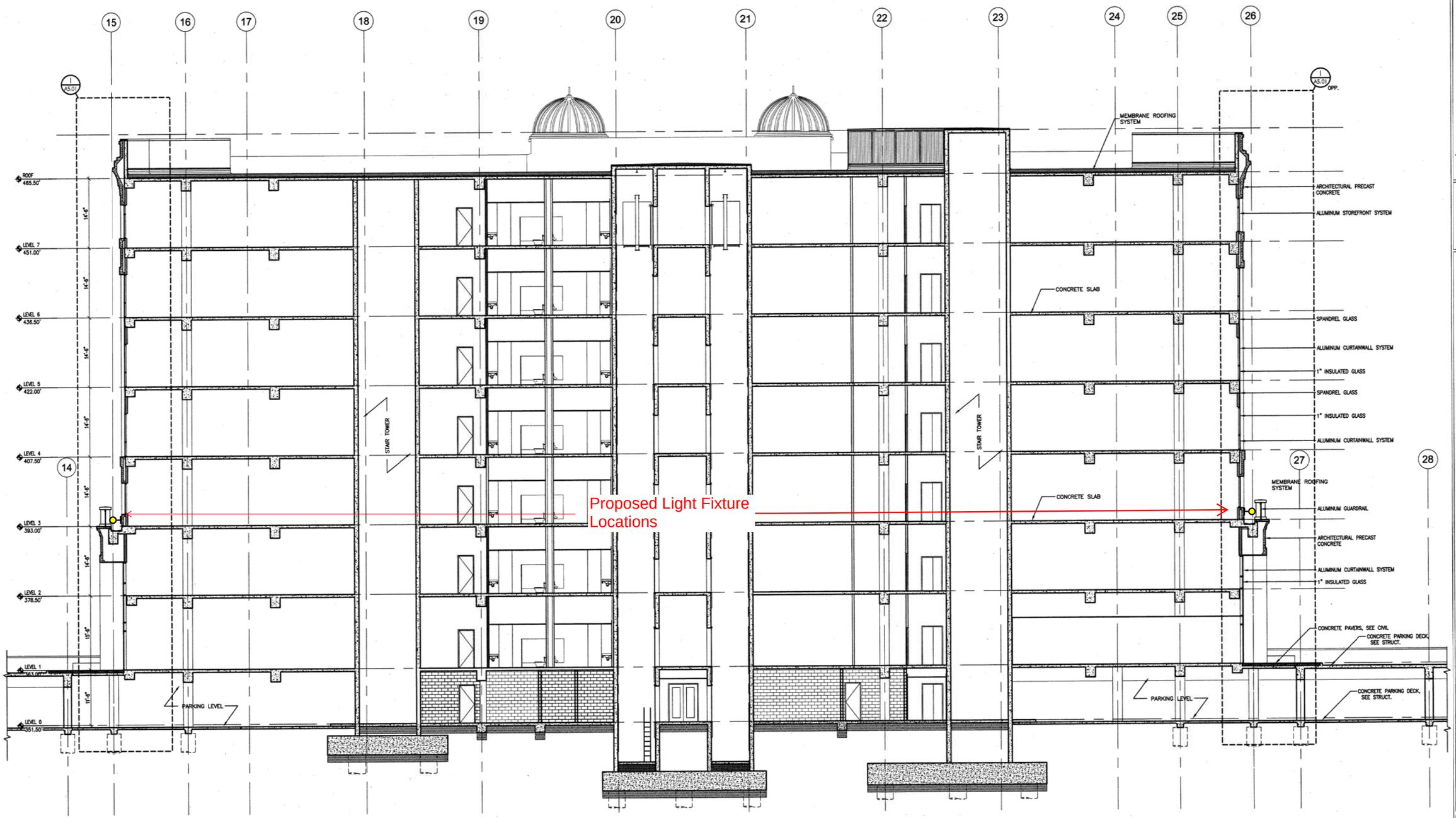

1 A4.5 **Building Section**
Scale: 1/8" = 1'

ARCHITECT
One Jackson Place, Suite 200
188 E. Capitol Street
Jackson, MS 39201-2100
P 601.352.2411
F 601.352.2821

DALE AND ASSOCIATES

300 Renaissance at Colony Park
300 Renaissance, LLC
Ridgeland, MS

Project No.:	05009
Date:	3 March 2006
Drawn by:	MJW
Checked:	JRB
Revisions:	
Revisions:	
Revisions:	
Revisions:	

A-4.05

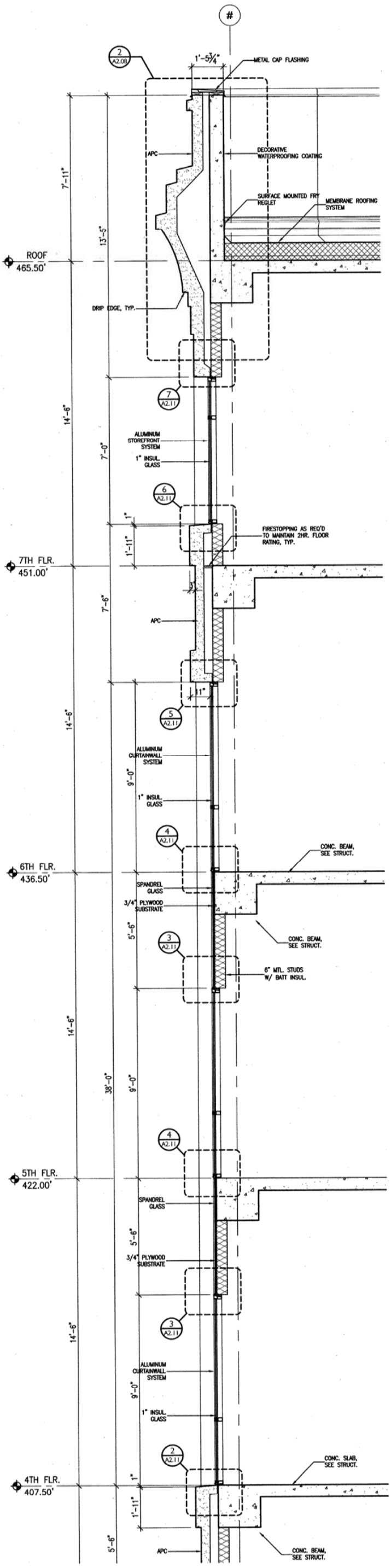

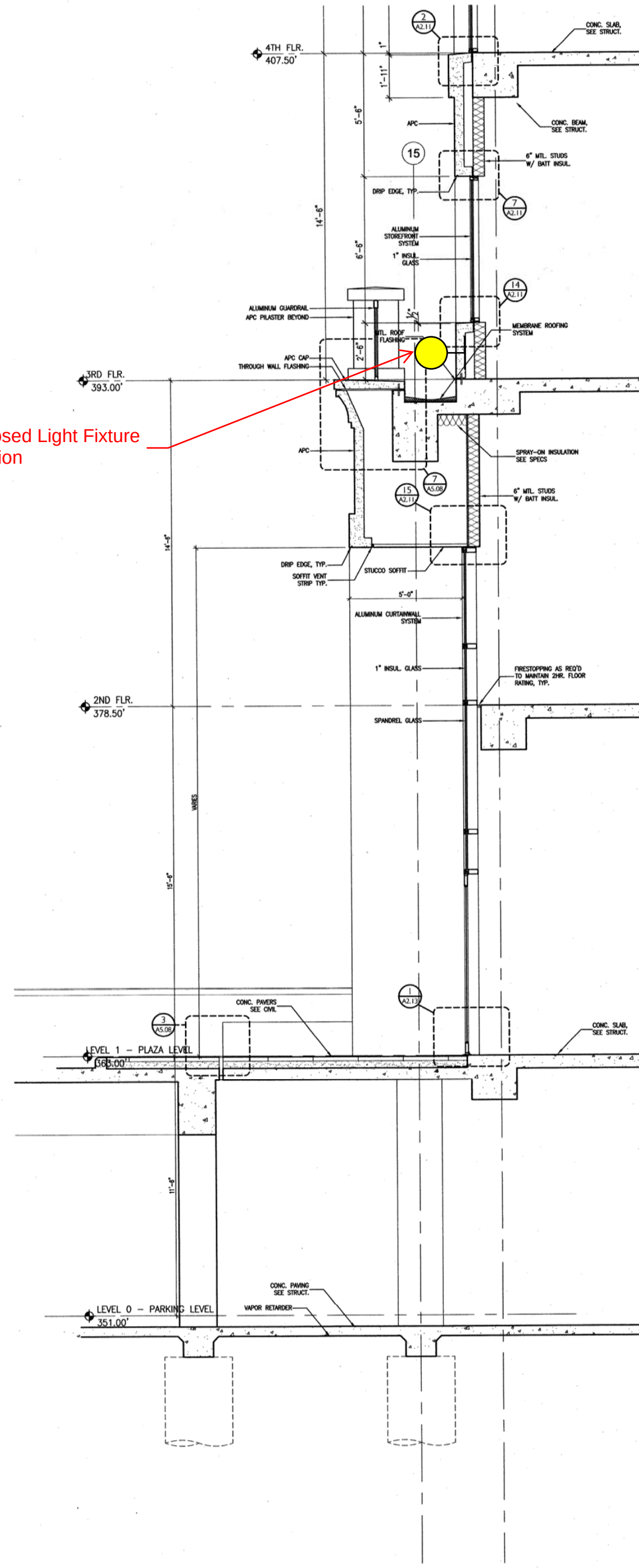

1 A5.01 **Wall Section**
Scale: 1/2" = 1'-0"

A-5.01

Project No: 05009
Date: 3 March 2006
Drawn by: MJW
Checked: JRB
Revisions:
Revisions:
Revisions:
Revisions:
Revisions:

300 Renaissance at Colony Park

300 Renaissance, LLC
Ridgeland, MS

DALE AND ASSOCIATES ARCHITECT

One Jackson Place, Suite 250
188 E. Capitol Street
Jackson, MS 39201-2100
P: 601.352.5411
F: 601.352.5362

cspire

c spire

cspire

Specification Sheet

lumenbeam
Large
COLOR CHANGING

Project Name Cspire **Qty** 38

Type M **Catalog / Part Number**

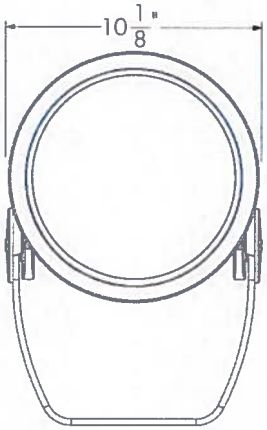

Front view

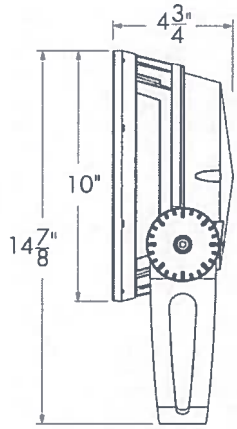

Side view

Photometric Summary

Based on RGBW color mix, full output

	Delivered output (lm)	Intensity (peak cd)
VN	2,233	93,100
NS	1,767*	60,125*
NF	1,631*	11,977*
FL	1,642*	4,543*
WFL	1,600*	1,513*

Photometric performance is measured in compliance with IESNA LM-79-08.
*Estimated. Consult website for the latest IES and LDT files.

Optics

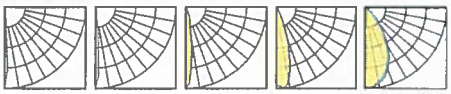

VN NS NF FL WFL

Control

lumentalk DMXrdm

Rating

c UL us CE RoHS

Description

The Lumenbeam Large Color Changing is a high-performance, 50W luminaire for applying dynamic color to multi-story facades and structures. It offers a wide array of options including a choice of optics for floodlighting or accent lighting; RGB, RGBW or RGBA color mixing; various mounting options, accessories, spread lenses and controls.

Features

Color and Color Temperature	Additive RGB, Additive RGB + white 4000K, Additive RGB + amber
Optics (nominal distribution)	6°, 10°, 20°, 40°, 60°
Optical Option	Linear spread lens horizontal distribution, Linear spread lens vertical distribution
Options	Short Yoke, 3G ANSI C136.31 Vibration Rating for bridge applications, Corrosion-resistant coating for hostile environments
Power Consumption	50 W
Warranty	5-year limited warranty

Performance

Delivered Output	1,795 lm (RGB full output, VN optic), 2,233 lm (RGBW full output, VN optic), 1,690 lm (RGBA full output, Vn optic)
Delivered Intensity	72,904 cd at nadir (RGB full output, VN optic), 93,100 cd at nadir (RGBW full output, VN optic), 66,141 cd at nadir (RGBA full output, optic VN)
Color Consistency	2 SDCM
Lumen Maintenance	L70 120,000 hrs (Ta 25 °C)

lumenpulse™
1220 Marie-Victorin Blvd., Longueuil, QC J4G 2H9 CA T 1.877.937.3003 | 514.937.3003 F 514.937.6289
info@lumenpulse.com www.lumenpulsegroup.com

Lumenpulse Group Inc. reserves the right to make changes to this product at any time without prior notice and such modification shall be effective immediately
2017.11.28 copyright © 2017 Lumenpulse Group Inc.
MG - R31

Physical

Housing Material	Low copper content high pressure die-cast aluminum
Yoke Material	Heavy aluminum (standard yoke included)
Lens Material	Clear tempered glass
Hardware Material	Stainless steel
Gasket Material	Silicone
Surface Finish	Electrostatically applied polyester powder coat
Weight	12 lbs
EPA	Front = 0.94 sq ft, Side = 0.56 sq ft

Electrical and control

Voltage	100 to 277 volts
Fixture Cable	Power and data in 1 cable, 3 ft cord standard (#16-5), other lengths available
Resolution (DMX/RDM)	Per fixture, 8-bit or 16-bit, 3 channels (RGB) or 4 channels (RGBW, RGBA)
Control	Lumentalk, DMX/RDM enabled

Environmental

Operating Temperature	-13 °F to 122 °F
IP Rating	IP66
IK Rating	IK10

Accessories (order separately)

Control Boxes	Power and control box - daisy chain configuration, Power and control box - star configuration
Control Systems	Lumentouch 2.0™, Lumencue, Lumentone
Diagnostic and Addressing Tools	LumenID, LumentalkID

lumenpulse™

1220 Marie-Victorin Blvd., Longueuil, QC J4G 2H9 CA T 1.877.937.3003 | 514.937.3003 F 514.937.6289
info@lumenpulse.com www.lumenpulsegroup.com

Lumenpulse Group Inc. reserves the right to make changes to this product at any time without prior notice and such modification shall be effective immediately
2017.11.28 copyright © 2017 Lumenpulse Group Inc.
MG - R31

Mounting options

SY - Short yoke

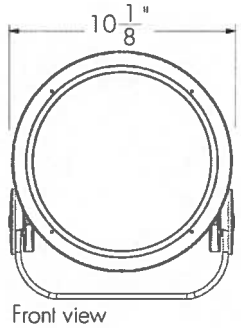

Front view

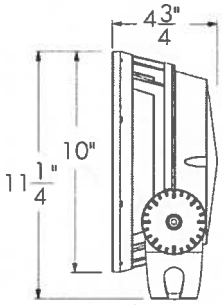

Side view

Mounting details

Mounting hole pattern - standard and short yoke

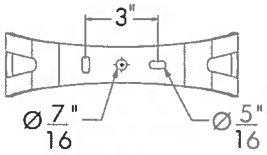

Adjustable pivot limits

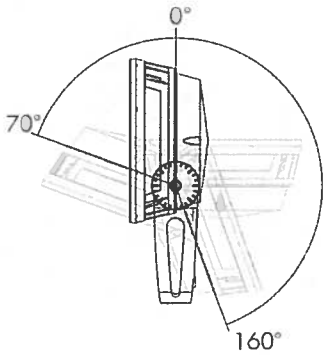

Standard yoke

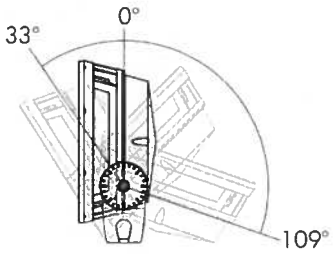

Short yoke

Optical options

LSLH - Linear spread lens horizontal distribution
LSLV - Linear spread lens vertical distribution

LSLH

LSLV

	Beam angle with LSLH/LSLV
VN	8° x 60°
NS	9° x 60°
NF	18° x 65°
FL	32° x 72°

Factory installed, not adjustable on site. Not available for WFL optic.
See 'Optical Accessories' section for field adjustable spread lens (LSLA).

lumenpulse™

1220 Marie-Victorin Blvd., Longueuil, QC J4G 2H9 CA T 1.877.937.3003 | 514.937.3003 F 514.937.6289
info@lumenpulse.com www.lumenpulsegroup.com

Lumenpulse Group Inc. reserves the right to make changes to this product at any time without prior notice and such modification shall be effective immediately
2017.11.28 copyright © 2017 Lumenpulse Group Inc.

Mounting accessories (order separately)

Round pole mounting accessory

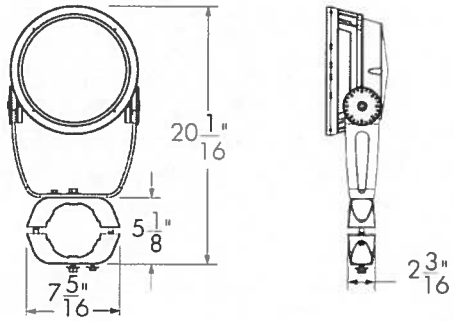

PM4 model shown.
Consult factory for square pole section.

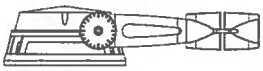

PM4-1, PM4.5-1, PM5-1 - Round pole mounting accessory - single fixture

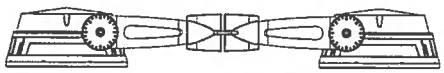

PM4-2, PM4.5-2, PM5-2 - Round pole mounting accessory - twin fixures
*One bracket assembly is supplied per 2 fixtures unless otherwise specified.

	PM4	PM4.5	PM5
For pole Ø	4" ± 1/16"	4.5" ± 1/16"	5" ± 1/16"

Consult factory for other pole diameters.

Tenon adapter

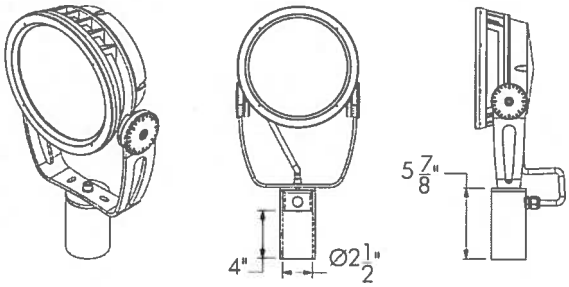

TN2 - Tenon adapter to fit on 2 3/8 in O.D. tenon

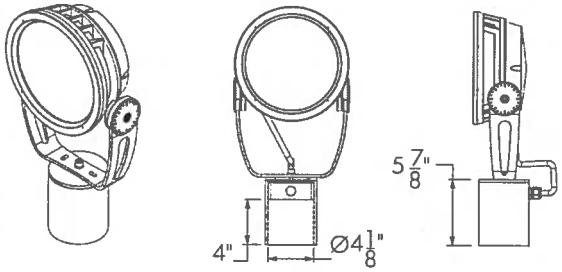

TN4 - Tenon adpater to fit on 4 in O.D. tenon

lumenpulse™
1220 Marie-Victorin Blvd., Longueuil, QC J4G 2H9 CA T 1.877.937.3003 | 514.937.3003 F 514.937.6289
info@lumenpulse.com www.lumenpulsegroup.com

Lumenpulse Group Inc. reserves the right to make changes to this product at any time without prior notice and such modification shall be effective immediately
2017.11.28 copyright © 2017 Lumenpulse Group Inc.
MG - R31

Optical accessories (order separately)

Installed optical accessories will affect the maximum pivot limits for each mounting option, consult factory for details.

SN - Snoot

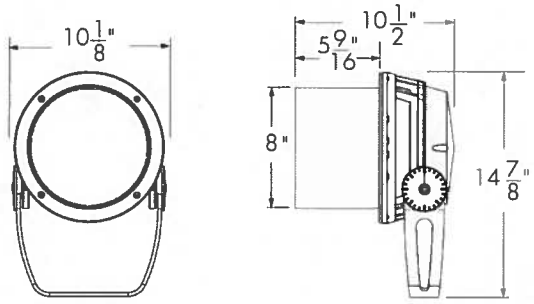

LBLSN-FINISH-BK
Interior surface painted black. Please specify desired exterior FINISH from list of available finishes.

SNW - Snoot wide

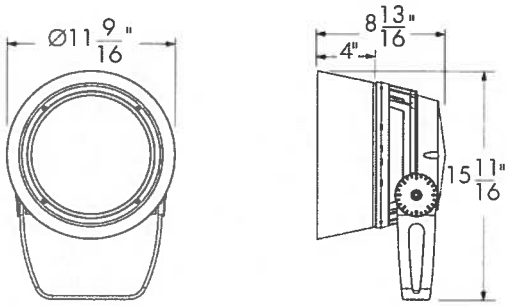

LBLSNW-FINISH-BK
Interior surface painted black. Please specify desired exterior FINISH from list of available finishes.

VS - Visor

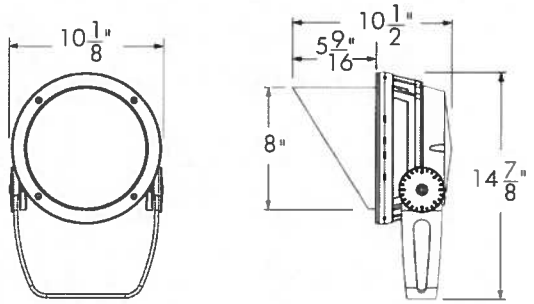

LBLVS-FINISH-BK
Interior surface painted black. Please specify desired exterior FINISH from list of available finishes.

LSLA - Linear spread lens adjustable

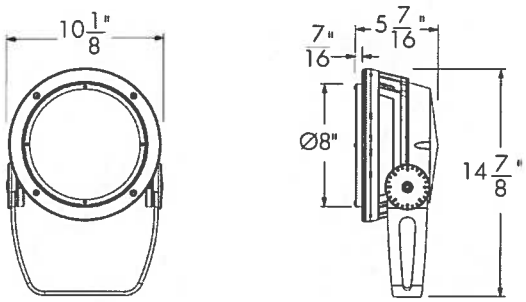

LBLLSLA-FINISH
Please specify desired exterior FINISH from list of available finishes.

WG - Wire guard

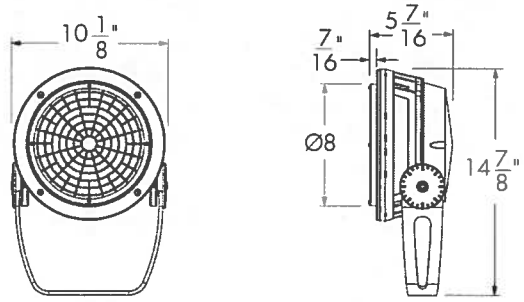

LBLWG-FINISH
Please specify desired exterior FINISH from list of available finishes.

Accessory combinations

+	Snoot	Snoot wide	Visor
Linear spread lens adjustable	YES	NO*	YES
Wire guard	YES	NO	YES

Accessory combinations must be ordered together on a single line
Ex: A snoot + wire guard combination order code is LBLSNWG-BK-BK.
*Consult factory for a linear spread lens adjustable + snoot wide combination.

lumenpulse™
1220 Marie-Victorin Blvd., Longueuil, QC J4G 2H9 CA T 1.877.937.3003 | 514.937.3003 F 514.937.6289
info@lumenpulse.com www.lumenpulsegroup.com

Lumenpulse Group Inc. reserves the right to make changes to this product at any time without prior notice and such modification shall be effective immediately
2017.11.28 copyright © 2017 Lumenpulse Group Inc.

Available exterior finishes for optical accessories

BK - Black Sandtex®
BRZ - Bronze Sandtex®
SI - Silver Sandtex®
WH - Smooth white
BKTX - Textured black
BRZTX - Textured bronze, non-metallic
GRATX - Textured medium gray
GRNTX - Textured green
WHTX - Textured white
CC - Custom color and finish (please specify RAL color)*

*Lumenpulse offers a wide selection of RAL CLASSIC (K7) colors with a smooth texture and high-gloss finish. Please consult factory for a list of available K7 colors, other RAL textures and glosses, or to match alternate color charts. Final color matching results may vary.

1220 Marie-Victorin Blvd., Longueuil, QC J4G 2H9 CA T 1.877.937.3003 | 514.937.3003 F 514.937.6289
info@lumenpulse.com www.lumenpulsegroup.com

Lumenpulse Group Inc. reserves the right to make changes to this product at any time without prior notice and such modification shall be effective immediately
2017.11.28 copyright © 2017 Lumenpulse Group Inc.
MG - R31

Typical wiring diagrams

Wiring color code

UL Color Code	USE
Green	Ground
Black	Live 100-277V
White	Neutral
Red/Purple	0-10V / Data +
Orange	0-10V / Data -

Lumentalk (LT)

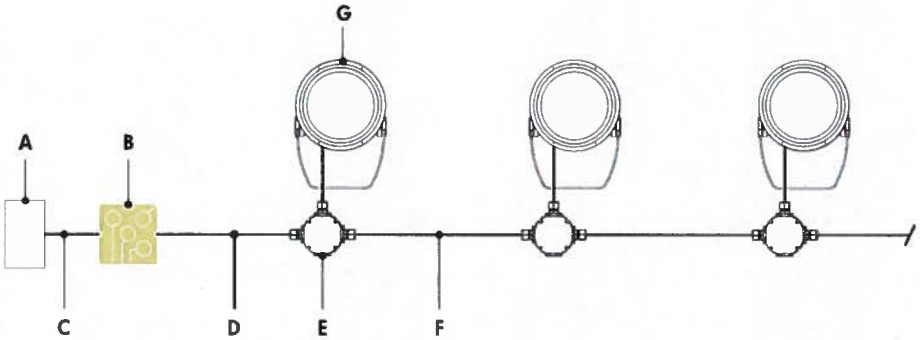

A - Third party DMX/RDM controller
B - Lumentranslator (LTL-DMX)
C - Data wiring (by others)
D - Power line (120-277V AC)
E - Junction box (by others)
F - Power wiring (by others)
G - Lumenbeam Large

Lumentalk (LT) - wiring detail

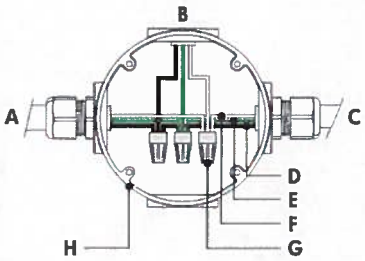

A - Power input (control over power line via Lumentalk system) or from previous fixture
B - To fixture
C - To next fixture
D - Live
E - Ground
F - Neutral
G - Wire-nuts (by others)
H - Junction box (by others)

- Consult factory for specific applications and maximum fixture count/cable length recommendations.
- Lumentalk enabled fixtures must be commissioned using LumentalkID software and a LID-LT. Consult factory for details.
- Maximum of 1 transmitter (Lumentranslator or Lumenlink) per system.
- No third party fixtures allowed on the same circuit.
- 1 DMX controller per Lumentalk network, maximum of 48 DMX channels per Lumentalk network (minimum step transition update rate is 1 second, minimum fade time between two colors is 1 minute). Consult factory for applications that require additional capabilities.
- 50 watts per fixture.

lumenpulse™
1220 Marie-Victorin Blvd., Longueuil, QC J4G 2H9 CA T 1.877.937.3003 | 514.937.3003 F 514.937.6289
info@lumenpulse.com www.lumenpulsegroup.com

Lumenpulse Group Inc. reserves the right to make changes to this product at any time without prior notice and such modification shall be effective immediately
2017.11.28 copyright © 2017 Lumenpulse Group Inc.

Star Layout (DMX/RDM)

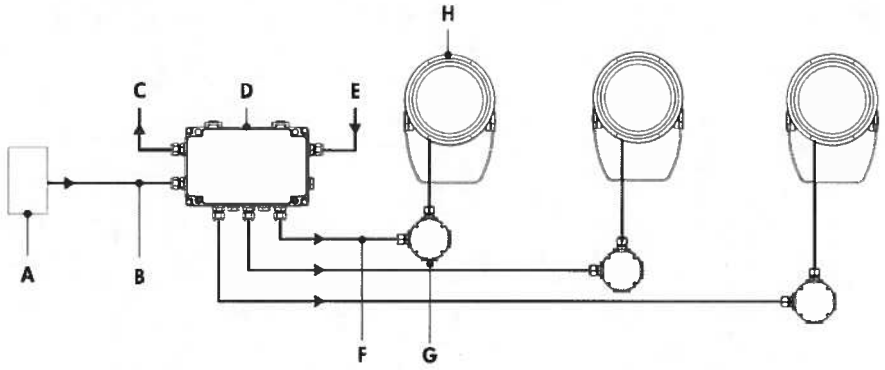

A - Third party DMX/RDM controller
B - Data input (Belden 9841 or equivalent, by others)
C - Data output to next CBX (optional, not isolated/not boosted)
D - CBX-ST
E - Power input (100-277V)
F - Power and data output to fixture (wiring by others)
G - Junction box (by others)
H - Lumenbeam Large

Star Layout (DMX/RDM) - wiring detail

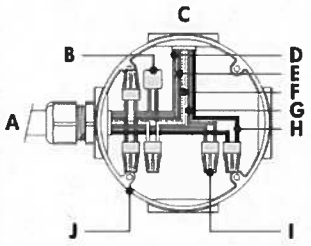

A - From CBX or previous fixture
B - Lumenterminator*
C - To fixture
D - Data -
E - Data +
F - Neutral
G - Ground
H - Live
I - Wire nuts (by others)
J - Junction box (by others)

Maximum number of fixtures per run (Based on15A maximum, 16AWG cable, fixtures spaced 10ft on center, first fixture 50ft from CBX)				
Configuration/Voltage	**120V**	**208V**	**240V**	**277V**
LBL	18	28	32	32

- Consult factory for specific applications and maximum fixture count/cable length recommendations.
- The DMX/RDM protocol states a maximum of 32 DMX/RDM enabled fixtures on any single run.
- Maximum of 4 DMX/RDM repeaters/CBX cascading in line.
- Maximum of 6 outputs per CBX-ST.
- RGB color mixture option requires 3 DMX addresses. RGBW color mixture option requires 4 DMX addresses. RGBA color mixture option requires 4 DMX addresses.
- 50 watts per fixture.

* DMX terminator is required at the end of each run to maintain data integrity. (6x) DMX lumenterminators included per CBX-ST. See installation instructions for details.

lumenpulse™
1220 Marie-Victorin Blvd., Longueuil, QC J4G 2H9 CA T 1.877.937.3003 | 514.937.3003 F 514.937.6289
info@lumenpulse.com www.lumenpulsegroup.com

Lumenpulse Group Inc. reserves the right to make changes to this product at any time without prior notice and such modification shall be effective immediately
2017.11.28 copyright © 2017 Lumenpulse Group Inc.

Daisy Chain Layout (DMX/RDM)

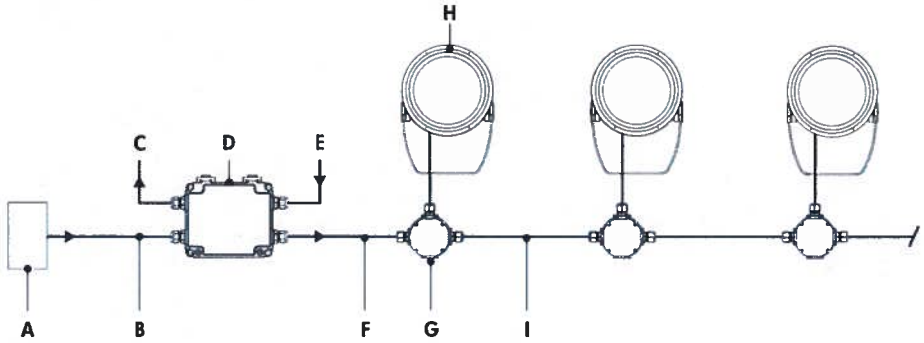

A - Third party DMX/RDM controller
B - Data input (Belden 9841 or equivalent, by others)
C - Data output to next CBX (optional, not isolated/not boosted)
D - CBX-DS
E - Power input (100-277V)
F - Power and data output to fixture (wiring by others)
G - Junction box (by others)
H - Lumenbeam Large
I - Power and data wiring (by others)

Daisy Chain Layout (DMX/RDM) - wiring detail (first or middle of run)

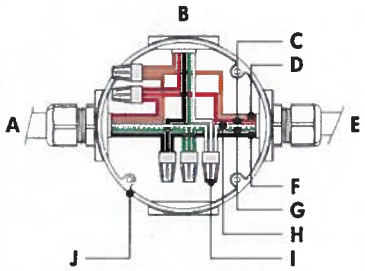

A - From CBX or previous fixture
B - To fixture
C - Data +
D - Data -
E - To next/from previous fixture
F - Live
G - Ground
H - Neutral
I - Wire-nuts (by others)
J - Junction box (by others)

Daisy Chain Layout (DMX/RDM) - wiring detail (end of run)

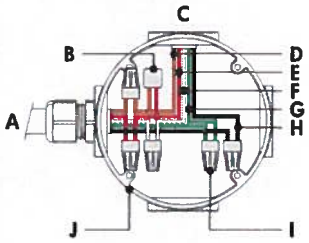

A - From CBX or previous fixture
B - Lumenterminator*
C - To fixture
D - Data -
E - Data +
F - Neutral
G - Ground
H - Live
I - Wire-nuts (by others)
J - Junction box (by others)

Maximum number of fixtures per run (Based on15A maximum, 16AWG cable, fixtures spaced 10ft on center, first fixture 50ft from CBX)				
Configuration/Voltage	**120V**	**208V**	**240V**	**277V**
LBL	18	28	32	32

- Consult factory for specific applications and maximum fixture count/cable length recommendations.
- The DMX/RDM protocol states a maximum of 32 DMX/RDM enabled fixtures on any single run.
- Maximum of 4 DMX/RDM repeaters/CBX cascading in line.
- Maximum of 1 output per CBX-DS.
- Maximum of 3 ft cable length between fixture and next junction box for daisy chain layout.
- RGB color mixture option requires 3 DMX addresses. RGBW color mixture option requires 4 DMX addresses. RGBA color mixture option requires 4 DMX addresses.
- 50 watts per fixture.

* DMX terminator is required at the end of each run to maintain data integrity. (2x) DMX lumenterminators included per CBX-DS. See installation instructions for details.

lumenpulse™
1220 Marie-Victorin Blvd., Longueuil, QC J4G 2H9 CA T 1.877.937.3003 | 514.937.3003 F 514.937.6289
info@lumenpulse.com www.lumenpulsegroup.com

Lumenpulse Group Inc. reserves the right to make changes to this product at any time without prior notice and such modification shall be effective immediately
2017.11.28 copyright © 2017 Lumenpulse Group Inc.

Accessories (order separately)

Control Boxes

CBX-DS-Power and control box - daisy chain configuration

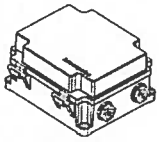

DMX/RDM control box. One power and data output to fixture or fixture run. Ethernet enabled option. Refer to CBX specification sheet for details.

CBX-ST-Power and control box - star configuration

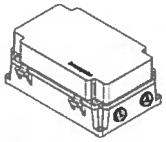

DMX/RDM control box. Up to six power and data outputs to fixtures or fixture runs. Ethernet enabled option. Refer to CBX specification sheet for details.

Control Systems

LTO2-Lumentouch 2.0™

Lumentouch is a wall mount DMX 512 controller keypad.

LCU-Lumencue

Lumencue is a USB / mini SD DMX 512 controller.

LTN-Lumentone

Lumentone is a simple pre-programmed DMX 512 controller with a push button rotary dial and live feedback.

Diagnostic and Addressing Tools

LID-LumenID

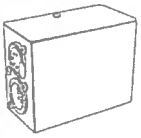

LumenID is a diagnostic and addressing DMX/RDM tool. It must be specified on all DMX applications. Refer to LID specification sheet for details.

LID-LT-LumentalkID

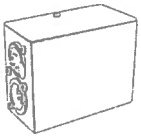

LumentalkID is a diagnostic and addressing tool. It must be specified for all Lumentalk (LT) applications. Refer to LID-LT specification sheet for details.

lumenpulse™

1220 Marie-Victorin Blvd., Longueuil, QC J4G 2H9 CA T 1.877.937.3003 | 514.937.3003 F 514.937.6289
info@lumenpulse.com www.lumenpulsegroup.com

Lumenpulse Group Inc. reserves the right to make changes to this product at any time without prior notice and such modification shall be effective immediately
2017.11.28 copyright © 2017 Lumenpulse Group Inc.
MG - R31

How to order

1	2	3	4	5	6	7	8
LBL	277	RGBW	NF			DMX/RDM	SY/TN2

9	10
UL	3 FT

1 . Housing

LBL	Lumenbeam™ Large

2 . Voltage

100	100 volts
120	120 volts
208	208 volts
220	220 volts
240	240 volts
277	277 volts

3 . Color and Color Temperature [1]

RGB	Additive RGB
RGBW	Additive RGB + white 4000K
RGBA	Additive RGB + amber

4 . Optics

VN	Very Narrow 6°
NS	Narrow Spot 10°
NF	Narrow Flood 20°
FL	Flood 40°
WFL	Wide Flood 60°

5 . Optical Option

LSLH	Linear spread lens horizontal distribution [2]
LSLV	Linear spread lens vertical distribution [2]

6 . Finish

BK	Black Sandtex®
BRZ	Bronze Sandtex®
SI	Silver Sandtex®
WH	Smooth white
BKTX	Textured black
BRZTX	Textured bronze non-metallic
GRATX	Textured medium gray
GRNTX	Textured green
WHTX	Textured white
CC	Custom color and finish (please specify RAL color) [3]

7 . Control

LT	Lumentalk [4]
DMX/RDM	DMX/RDM enabled

8 . Options

SY	Short Yoke
3GV	3G ANSI C136.31 Vibration Rating for bridge applications
CRC	Corrosion-resistant coating for hostile environments [5]

9 . Certification

UL	UL compliant
CE	CE compliant

lumenpulse™

1220 Marie-Victorin Blvd., Longueuil, QC J4G 2H9 CA T 1.877.937.3003 | 514.937.3003 F 514.937.6289
info@lumenpulse.com www.lumenpulsegroup.com

Lumenpulse Group Inc. reserves the right to make changes to this product at any time without prior notice and such modification shall be effective immediately
2017.11.28 copyright © 2017 Lumenpulse Group Inc.

10 . Cable Length [6]

3FT	3 ft [6] [7]
10FT	10 ft
20FT	20 ft
30FT	30 ft
50FT	50 ft
70FT	70 ft
100FT	100 ft

Notes:

[1] Consult factory for color mix with Royal Blue, 3000K or other white color temperature LEDs.

[2] Factory installed, not available for 60° optic. Field adjustable spread lens optical accessory available, order separately.

[3] Lumenpulse offers a wide selection of RAL CLASSIC (K7) colors with a smooth texture and high-gloss finish. Please consult factory for a list of available K7 colors, other RAL textures and glosses, or to match alternate color charts. Final color matching results may vary.

[4] A Lumentranslator and LumentalkID (LIDLT) must be specified for Lumentalk applications. Consult Lumentranslator and Lumentalk pages and specification sheets for details.

[5] Use only when exposed to salt spray and harsh chemicals. This option is not required for normal outdoor exposure.

[6] 3 ft cable length is standard unless otherwise specified.

[7] Maximum of 3 ft cable length for daisy chain DMX applications with CBX-DS.

lumenpulse™

1220 Marie-Victorin Blvd., Longueuil, QC J4G 2H9 CA T 1.877.937.3003 | 514.937.3003 F 514.937.6289
info@lumenpulse.com www.lumenpulsegroup.com

Lumenpulse Group Inc. reserves the right to make changes to this product at any time without prior notice and such modification shall be effective immediately
2017.11.28 copyright © 2017 Lumenpulse Group Inc.

Specification Sheet

lumentouch 2.0™

Client Cspire **Project name** _____

Order# _____ **Type** Color Control **Qty** 1

FEATURES AND BENEFITS

- Flat wall mounted lighting controller
- Can be used without a computer in stand alone mode
- Universal mounting plate compatible with most electrical backboxes
- MINI-USB connection for software programming
- Touch sensitive control panel
- 2 DMX universes (1024 channels)
- Unlimited memory via Micro SDCARD
- Integrated clock/calendar
- RS 232 serial and I/O ports
- Universal infrared receiver
- Standard with ETHERNET card

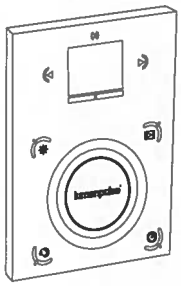

PACKAGE CONTENT

- Lumentouch hardware (stand alone wall mounted DMX controller)
- Mini-USB cable
- Micro SDCARD and adapter
- UL listed 6-7V DC power supply (100-240V AC input voltage) with connector block for DMX connection
- Compatible with Windows (XP, VISTA and 7, 32-bit or 64-bit)
- PDF User manual available for download on the Lumenpulse website
- Troubleshooting Tips document available for download on the Lumenpulse website
- Lumenstudio programming software available for download on the Lumenpulse website (Hardware manager is part of the Lumenstudio Software download)

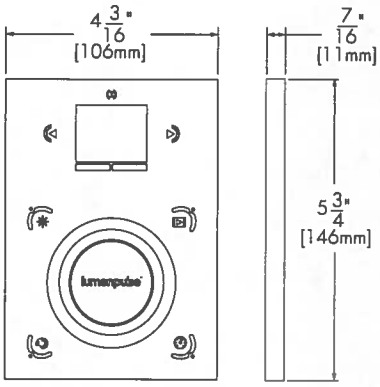

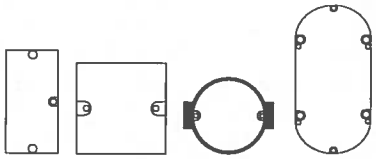

Universal back mounting plate
Hole pattern to fit most standard junction boxes
*Extended back boxes are recommended for all installations.

HOW TO ORDER

LTO2

Housing

1

* Please remove protective film before use to ensure proper operation of the controller.

© Copyright Lumenpulse 2017

1751 Richardson, Suite 1505
Montreal (Quebec) Canada
H3K 1G6

1.877.937.3003
P.514.937.3003
F. 514.937.6289
info@lumenpulse.com
www.lumenpulsegroup.com

5-year limited warranty.

Consult www.lumenpulsegroup.com for our complete Standard Terms and Conditions of Sales.

lumenpulse™ GROUP

Lumenpulse reserves the right to make changes to this product at any time without prior notice and such modification shall be effective immediately.

2017.03.30
NK - R6

CONNECTIONS

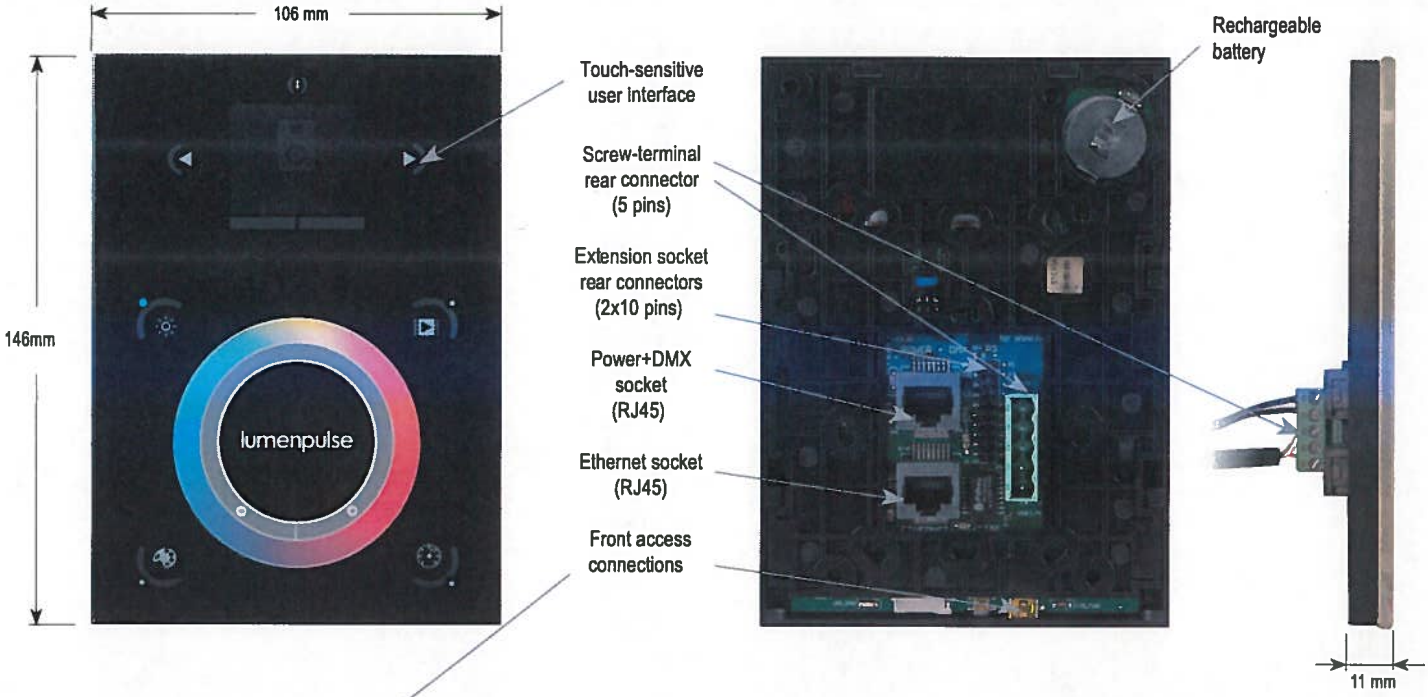

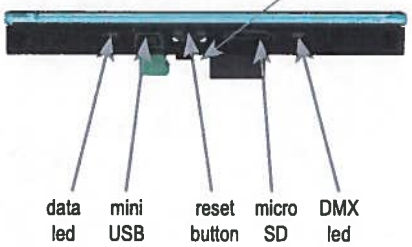

Input Power	6-7V DC 0.6A
Output Protocol	DMX512 (x2)
Programmability	PC, Mac, Tablet, Smartphone
Available colors	Black
Connections	USB, Ethernet, RS232, Clock, 8 dry contact ports, 5v Output Relay
Memory	microSD (32Gb Max)
Temperature	-10°C to 45°C
Mounting	Single or double gang wall socket
Dimensions	146 x 106 x 11mm
Weight	247g
Standards	EC, EMC, ROHS, ETL

© Copyright Lumenpulse 2017

1751 Richardson, Suite 1505
Montreal (Quebec) Canada
H3K 1G6

1.877.937.3003
P.514.937.3003
F. 514.937.6289
info@lumenpulse.com
www.lumenpulsegroup.com

5-year limited warranty.

Consult www.lumenpulsegroup.com for our complete Standard Terms and Conditions of Sales.

lumenpulse™ GROUP

Lumenpulse reserves the right to make changes to this product at any time without prior notice and such modification shall be effective immediately.

MOUNTING PATTERN

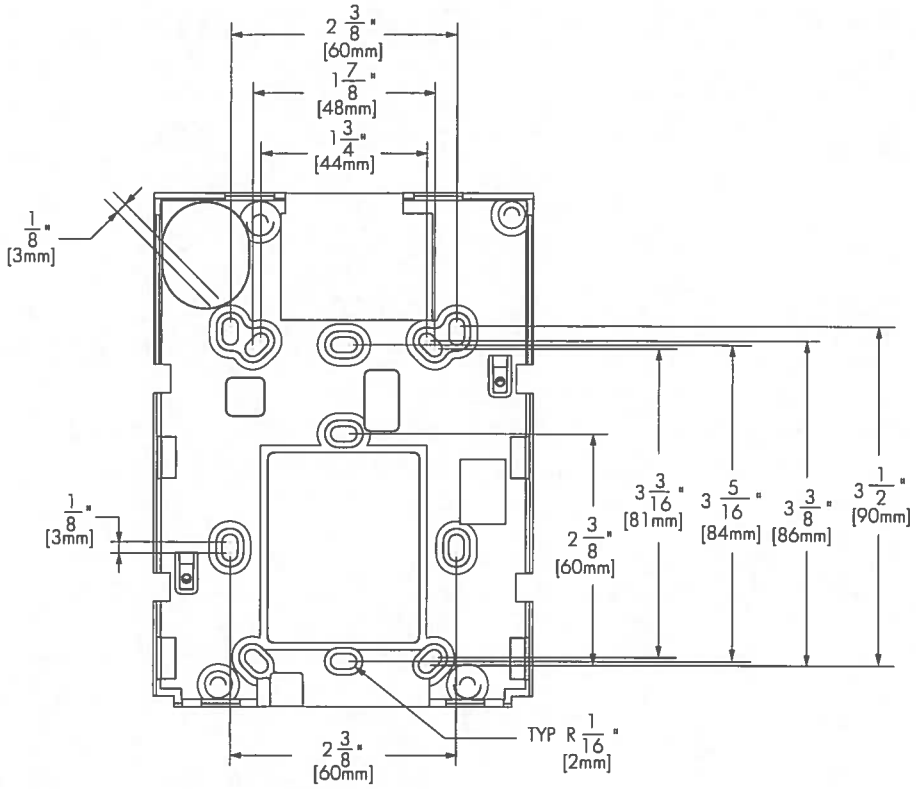

MOUNTING HOLE PATTERN

*Extended electrical back boxes are recommended for all installations

© Copyright Lumenpulse 2017

1751 Richardson, Suite 1505
Montreal (Quebec) Canada
H3K 1G6

1.877.937.3003
P.514.937.3003
F. 514.937.6289
info@lumenpulse.com
www.lumenpulsegroup.com

5-year limited warranty.

Consult www.lumenpulsegroup.com for our complete Standard Terms and Conditions of Sales.

lumenpulse™ GROUP

Lumenpulse reserves the right to make changes to this product at any time without prior notice and such modification shall be effective immediately.

INSTALLATION

1. Mount an electrical box inside the wall

The controller can be installed in any standard electrical backbox. If you use a double size box, you can insert the power supply inside.

2. Connect the wires

POWER: Connect a 6V to 7V DC 0.6A ACDC supply.
Be sure to not invert the + and the ground.

DMX: Connect the DMX cable to the lighting receivers (Leds, Dimmers, Fixtures..)
(for XLR: 1=ground 2=dmx- 3=dmx+)

Wire Identification
(From power supply to connector block)

POWER DC + (white trace wire)
POWER GROUND (black wire)

Wire Identification
(From power supply to wall plug)

VDC + (blue wire)
VDC - (brown wire)

3. Mount the interface on the wall

First, mount the back side of the interface on the wall with 2 or more screws
Secondly, plug the connectors :
- DMX and power (connector block or RJ45)
- Ethernet cable

The front panel is mounted by pressing it against the back plate and then sliding down. 2 screws should then be attached underneath to hold the controller in place.

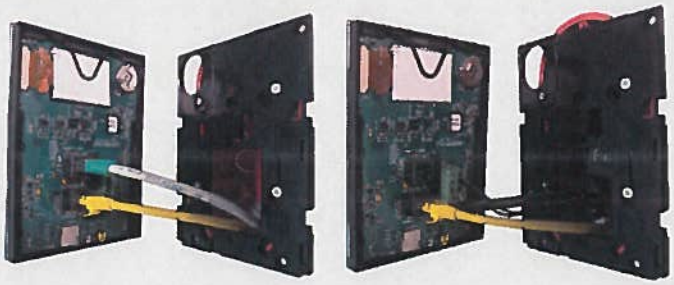

POWER+DMX
WITH THE
CONNECTOR BLOCK

POWER+DMX
WITH THE
RJ45 CABLE

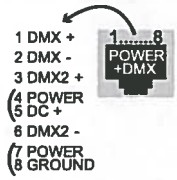

© Copyright Lumenpulse 2017

1751 Richardson, Suite 1505
Montreal (Quebec) Canada
H3K 1G6

1.877.937.3003
P.514.937.3003
F. 514.937.6289
info@lumenpulse.com
www.lumenpulsegroup.com

5-year limited warranty.

Consult www.lumenpulsegroup.com for our complete Standard Terms and Conditions of Sales.

lumenpulse™ GROUP

Lumenpulse reserves the right to make changes to this product at any time without prior notice and such modification shall be effective immediately.

EXTENSION CONNECTORS

****CHECK PIN CONFIGURATIONS. APPLYING POWER TO THE DMX INPUT WILL DAMAGE THE CONTROLLER****
****MAKE SURE THE CONTROLLER IS MOUNTED WITHOUT TOO MUCH FORCE BEHIND AS THIS CAN PUSH APART THE GLASS****
****LUMENPULSE RECOMMENDS USING A GANG BOX EXTENSION IF POSSIBLE**
TO INCREASE THE VOLUME OF THE WIRING COMPARTMENT FOR EASE OF INSTALLATION**

2x10 pins EXTENSION socket

DMX CHIP replacement

DMX universe #1

DMX universe #2

Ref: SP485ECN-L
MAX485 CSA

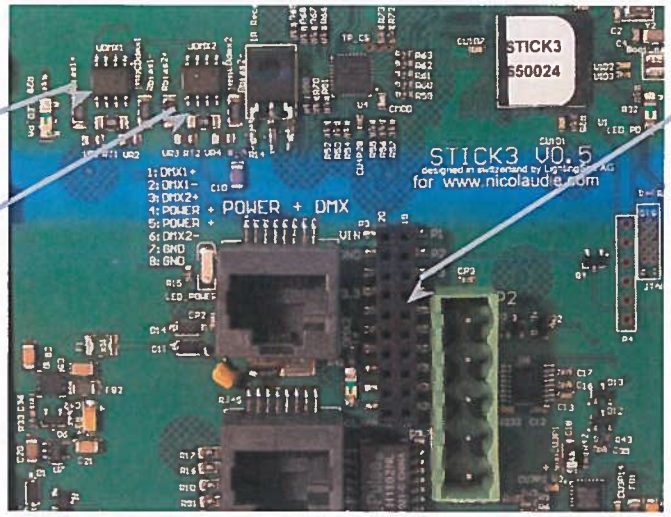

EXTENSION socket

VIN	20	19	PORT1
GND	18	17	PORT2
IR_RX	16	15	PORT3
3.3V	14	13	PORT4
Relay	12	11	PORT5
DMX2+	10	9	PORT6
DMX2-	8	7	PORT7
DMX1+	6	5	PORT8
DMX1-	4	3	RS232 RX
GND_DMX	2	1	RS232 TX

Compatible header connectors:
WURTH ELEKTRONIK ref: 61301021121
MOLEX ref: 10-89-7202
TE Connectivity ref: 1-87227-0
FCI ref: 77313-101-20LF
HARWIN ref: M20-9981046
SAMTEC ref: TSW-110-xx-T-D
FARNELL ref: 1841232
RS ref: 763-6754 673-7534 251-8165
MOUSER ref: 538-10-89-7202
DIGIKEY ref: WM26820-ND

BLACKOUT Relay (energy saving)

A relay can be connected between the RELAY and GND sockets of the 20 pin extension socket. This can be used to turn off other equipment such as lighting drivers. The signal is connected when the controller is in standby.

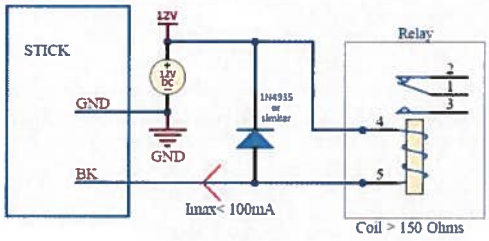

Example of relay :
FINDER Ref.
22.23.9.012.4000

RS232 triggering

Make a cable using the 3 pins : TX, RX and G (GND)
Set the RS232 parameters to : 9600bds 8 bits, no Parity, 2 Stop bits
Messages should be hexadecimal not decimal (ie. 1 = 01, 255 = ff etc.)

- To play a scene, send 4 bytes : **1 x y 255**
- To stop a scene, send 4 bytes : **2 x y 255**
- To pause a scene, send 4 bytes : **3 x y 255**
- To release a pause, send 4 bytes : **4 x y 255**
- To reset a scene, send 4 bytes : **5 x y 255**

When (y)=0, (x) can be set between 0 and 255
-to stop scene 145, send the command: 2 145 0 255
When (y)=1, (x) can be set between 0 and 243 to trigger scenes 256-499
-to play scene 300, send the command: 1 44 1 255

Dry Contact Port Triggering

It is possible to start scenes using the input ports (contact closure). To activate a port, a brief contact of at least 1/25 second must be established between the ports (1...8) and the ground (GND). Note: the scene will not be switched off when the switch is released.

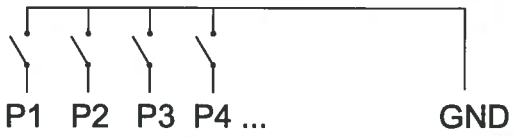

Network Control

The controller can be connected to a local network, allowing it to be controlled from a smartphone or tablet over WiFi.

- Connect the controller to a router or switch with an RJ45 cable
- The controller is set by default to get an IP address from the router via DHCP. If the network is not working with DHCP, a manual IP address and subnet mask can be set using the Hardware Manager
- If the network has a firewall enabled, allow ports 2430 and 2431

TCP Triggering

The controller can be connected to an existing automation system over a network and triggered via TCP packets on port 2431 or UDP packets on 2430. Refer to the remote protocol document for more information.

© Copyright Lumenpulse 2017

1751 Richardson, Suite 1505
Montreal (Quebec) Canada
H3K 1G6

1.877.937.3003
P.514.937.3003
F. 514.937.6289
info@lumenpulse.com
www.lumenpulsegroup.com

5-year limited warranty.

Consult www.lumenpulsegroup.com for our complete Standard Terms and Conditions of Sales.

lumenpulse™ GROUP

Lumenpulse reserves the right to make changes to this product at any time without prior notice and such modification shall be effective immediately.

SETTING UP THE CONTROLLER

iPhone/iPad/Android Control

The controller can be used with one of 3 different apps. Each available at Google Play and the App store.

DMX Lightpad 3

Designed to work seamlessly with the controller, DMX Lightpad 3 provides an easy way to control your lights over a local WiFi network. Use the wheel to change the dimmer, color or speed, and the arrows to select scenes and effects just like the wall panel. Swipe down to reveal quick access scene selection buttons.

Easy Remote

Create an entirely customized remote controller for your tablet or smartphone. Easy Remote is a powerful and intuitive app allowing you to easily add buttons, faders, color wheels and more. Connect to a WiFi network and the app will find all compatible devices.

Arcolis

The Arcolis application is a comprehensive tool allowing you to directly control and re-program the controller from your smartphone or tablet. This is a simple application which can be used by just about everyone in any situation. Mobile, easy to use and powerful, Arcolis is the ideal controller for dimming or switching traditional, LED and RGB color mixing DMX lighting fixtures. Program static and dynamic lighting scenes and effects. Arcolis is compatible with Android devices only.

Programming the Controller

The controller be programmed from a PC using the software available on our website.
Refer to the corresponding user manual for more information. The firmware can be updated using the Hardware Manager which is included with the programming software.

Lumenstudio Software and hardware (Windows)
http://www.lumenpulsegroup.com/products/128/lumentouch-20

© Copyright Lumenpulse 2017

1751 Richardson, Suite 1505
Montreal (Quebec) Canada
H3K 1G6

1.877.937.3003
P.514.937.3003
F. 514.937.6289
info@lumenpulse.com
www.lumenpulsegroup.com

5-year limited warranty.

Consult www.lumenpulsegroup.com for our complete Standard Terms and Conditions of Sales.

lumenpulse™ GROUP

Lumenpulse reserves the right to make changes to this product at any time without prior notice and such modification shall be effective immediately.

Specification Sheet

CBX™

CONTROL BOX FOR LINE VOLTAGE FIXTURES

Client _____ **Project name** Cspire

Order# _____ **Type** CBX **Qty** 3

Physical :

- Die-cast aluminum enclosure
- Two compartments: base for connections and cover for electronics
- Wall partition for separation of circuits
- Hinged cover with safety cable
- Electro-statically applied polyester powder coat finish
- Data input, 1/2" provision holes for 1/2" NPT, PG16 or 20mm
- Power input, 1/2" provision holes for 1/2" NPT, PG16 or 20mm
- Up to six outputs, 1/2" provision holes for 1/2" NPT, PG16 or 20mm
- Mounting detail on the bottom of the box
- TX & RX indicator LED lights for troubleshooting
- Onboard data termination switch
- Onboard test button
- Operating temperatures: -25°C to 50°C [-13F to 122F]
- Storage temperatures: -40°C to 85°C [-40F to 185F]
- Weight: small housing - 1.70 kg / 3.75 lbs, large housing - 3.61 kg / 7.95 lbs
- Suitable for indoor and outdoor applications, IP66
- Meets 3G ANSI C136.31 Vibration standard for bridge applications
- Optional corrosion-resistant coating for hostile environments*

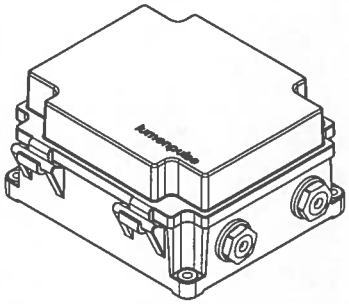

*UL listed watertight strain relief connectors and cables by others.

Seal all possible water entry points with RTV silicone (pressure glands, conduit). Sealing compound by others.

Electrical :

- 100 to 347V input
- DMX/RDM enabled

Related Products:

DMX dimming, Dynamic White and Color Changing for:
Lumenbeam Family
Lumenfacade Family
Lumencove Family
Lumenline Family

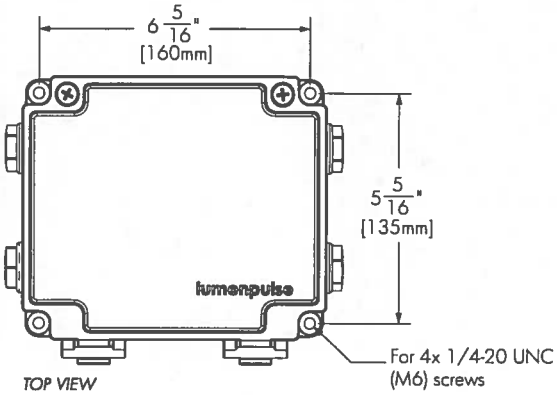

TOP VIEW

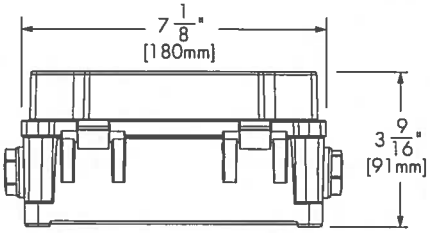

FRONT VIEW
SMALL HOUSING SHOWN (CBX-DS, 100-277V configuration)

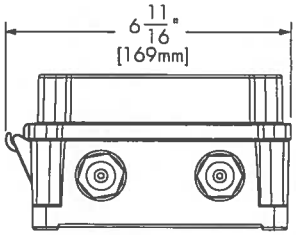

SIDE VIEW

* Use only when exposed to salt spray and harsh chemicals. This option is not required for normal outdoor exposure!

© Copyright lumenpulse Group Inc. 2018

1220 Marie-Victorin Boulevard
Longueuil (Quebec) Canada
J4G 2H9
1.877.937.3003
P. 514.937.3003
F. 514.937.6289
info@lumenpulse.com **www.lumenpulse.com**

5-year limited warranty.

Consult www.lumenpulse.com for our complete Standard Terms and Conditions of Sales.

lumenpulse™

Lumenpulse Group Inc. reserves the right to make changes to this product at any time without prior notice and such changes shall be effective immediately.

2018.02.06
NK - R13

DIMENSIONS - LARGE HOUSING

CBX-DS 347V, CBX-ST 100-347V

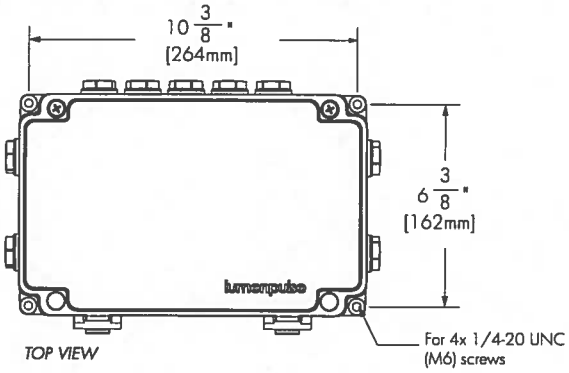

TOP VIEW

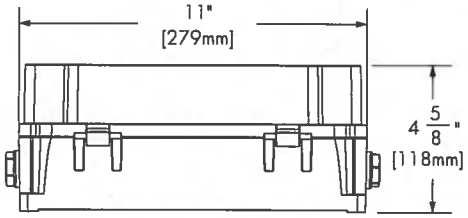

FRONT VIEW

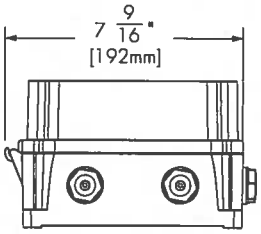

SIDE VIEW

DIMENSIONS - OPEN HOUSING

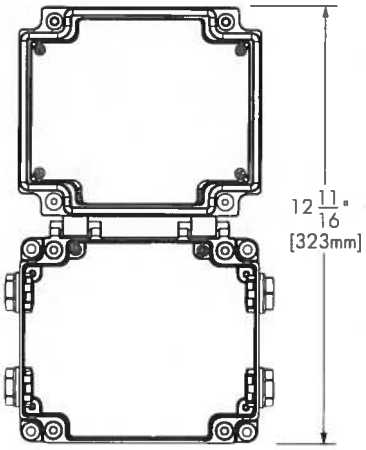

SMALL HOUSING

DS - Daisy Chain Configuration, 100-277V

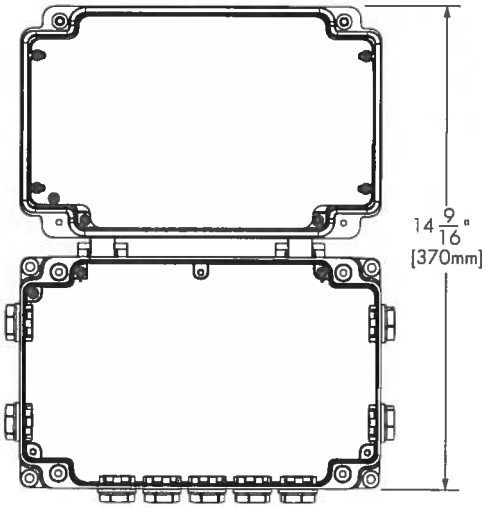

LARGE HOUSING

DS - Daisy Chain Configuration, 347V
ST - Star Configuration, 100-347V

© Copyright Lumenpulse Group Inc. 2018

1220 Marie-Victorin Boulevard
Longueuil (Quebec) Canada
J4G 2H9

1.877.937.3003
P. 514.937.3003
F. 514.937.6289

info@lumenpulse.com **www.lumenpulse.com**

5-year limited warranty.

Consult www.lumenpulse.com for our complete Standard Terms and Conditions of Sales.

lumenpulse™

Lumenpulse Group Inc. reserves the right to make changes to this product at any time without prior notice and such changes shall be effective immediately.

INPUT AND OUTPUT DETAILS

CBX-DS, 100-277V CONFIGURATION

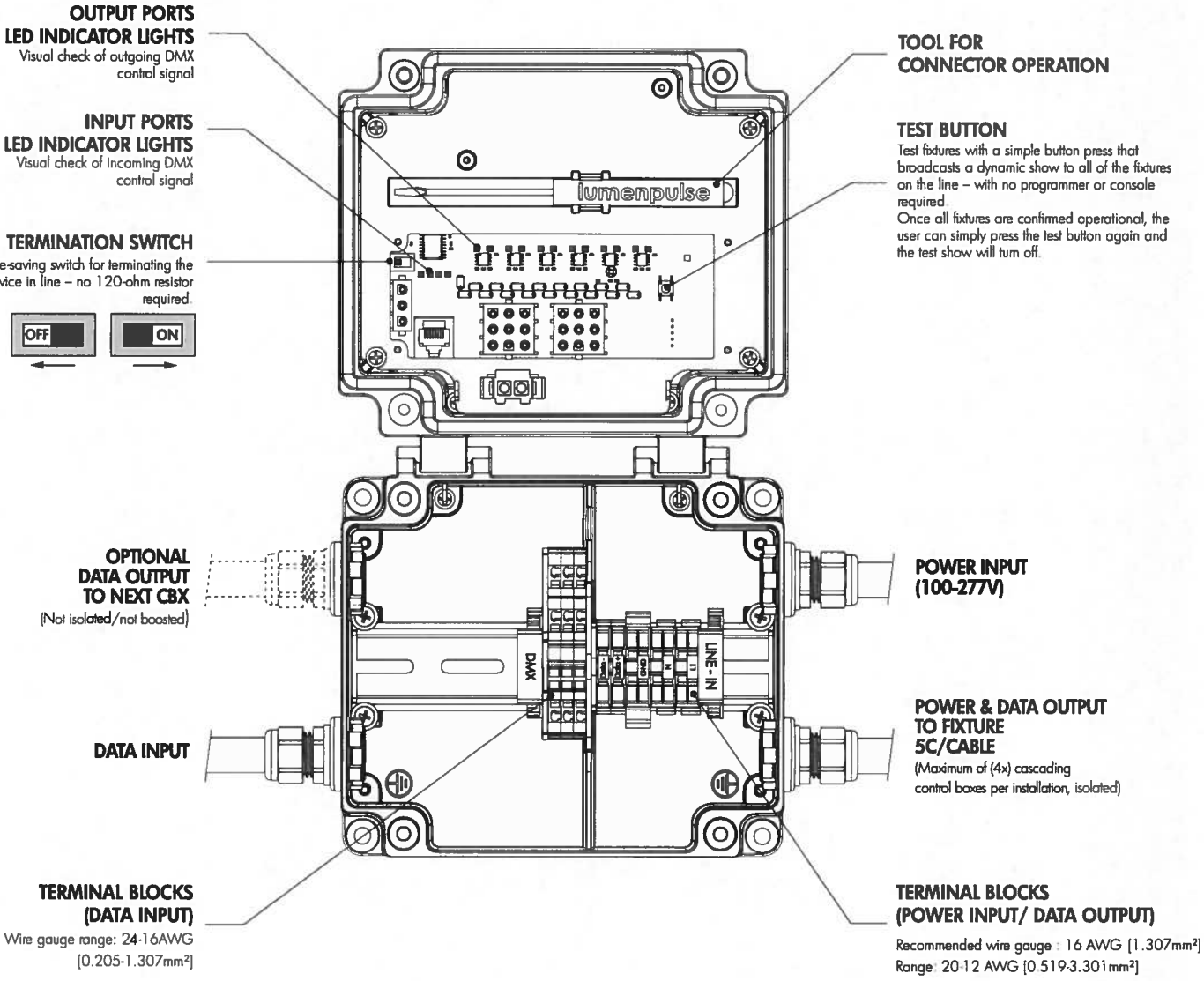

© Copyright Lumenpulse Group Inc. 2018

1220 Marie-Victorin Boulevard
Longueuil (Quebec) Canada
J4G 2H9

1.877.937.3003
P. 514.937.3003
F. 514.937.6289

info@lumenpulse.com **www.lumenpulse.com**

5-year limited warranty.

Consult www.lumenpulse.com for our complete Standard Terms and Conditions of Sales.

lumenpulse™

Lumenpulse Group Inc. reserves the right to make changes to this product at any time without prior notice and such changes shall be effective immediately.

INPUT AND OUTPUT DETAILS - continued

CBX-DS, 347V CONFIGURATION

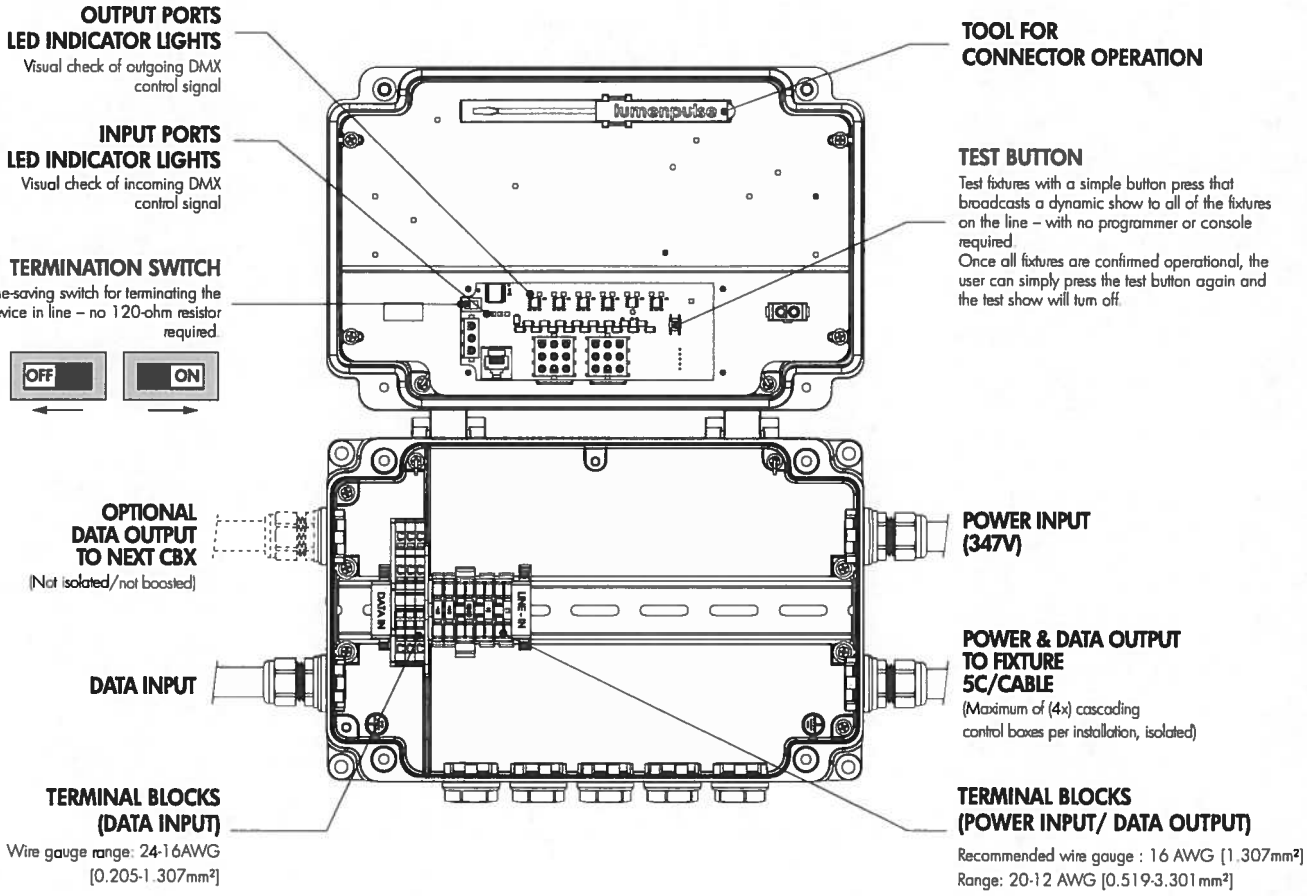

© Copyright Lumenpulse Group Inc. 2018

1220 Marie-Victorin Boulevard
Longueuil (Quebec) Canada
J4G 2H9

1.877.937.3003
P. 514.937.3003
F. 514.937.6289

info@lumenpulse.com **www.lumenpulse.com**

5-year limited warranty.

Consult www.lumenpulse.com for our complete Standard Terms and Conditions of Sales.

lumenpulse™

Lumenpulse Group Inc. reserves the right to make changes to this product at any time without prior notice and such changes shall be effective immediately.

INPUT AND OUTPUT DETAILS - continued

CBX-ST, 100-347V CONFIGURATION

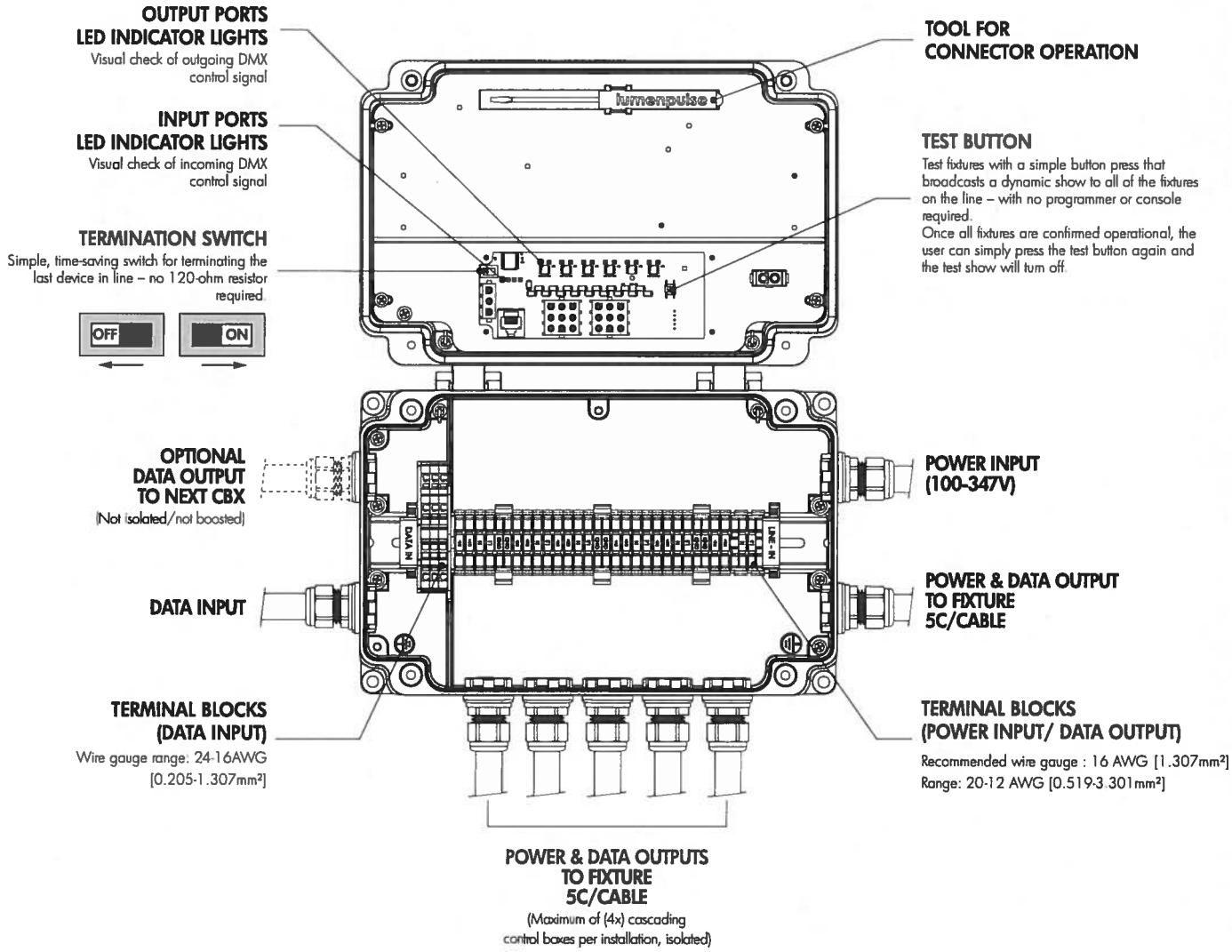

© Copyright Lumenpulse Group Inc. 2018

1220 Marie-Victorin Boulevard
Longueuil (Quebec) Canada
J4G 2H9
1.877.937.3003
P. 514.937.3003
F. 514.937.6289
info@lumenpulse.com **www.lumenpulse.com**

5-year limited warranty.

Consult www.lumenpulse.com for our complete Standard Terms and Conditions of Sales.

lumenpulse™

Lumenpulse Group Inc. reserves the right to make changes to this product at any time without prior notice and such changes shall be effective immediately.

HOW TO ORDER

CBX- Select:	Select:	DMX/RDM	Select:	Select:
1	2	3	4	5

1

Housing:

CBX-DS - Power and Control box, Daisy Chain Configuration (1 output)
CBX-ST - Power and Control box, Star Configuration (Up to 6 outputs)

2

Voltage Input:

100 - 100 volts
120 - 120 volts
208 - 208 volts
220 - 220 volts
240 - 240 volts
277 - 277 volts
347 - 347 volts[1]

3

Control:

DMX/RDM - DMX/RDM enabled

4

Finish:

BK - Black Sandtex®
BRZ - Bronze Sandtex®
SI - Silver Sandtex®
WH - Smooth white
BKTX - Textured black
BRZTX - Textured bronze non-metallic
GRATX - Textured medium gray
GRNTX - Textured green
WHTX - Textured white
CC - Custom color and finish (please specify RAL color)[2]

5

Option:

CRC - Corrosion-resistant coating for hostile environments

Related Products:

DMX dimming, Dynamic White and Color Changing in Lumenbeam, Lumenfacade, Lumencove and Lumenline families.

Notes:

[1] Consult fixture specification sheets for 347V availability. [2] North American RAL colors specified with RAL number only are provided with a smooth/high-gloss finish. Please consult factory for other RAL textures and glosses, or to match alternate color charts. Final color matching results may vary.

© Copyright Lumenpulse Group Inc. 2018

1220 Marie-Victorin Boulevard
Longueuil (Quebec) Canada
J4G 2H9
1.877.937.3003
P. 514.937.3003
F. 514.937.6289
info@lumenpulse.com **www.lumenpulse.com**

5-year limited warranty.

Consult www.lumenpulse.com for our complete Standard Terms and Conditions of Sales.

lumenpulse™

Lumenpulse Group Inc. reserves the right to make changes to this product at any time without prior notice and such changes shall be effective immediately.

THIS IS A CLASS "A" SURVEY ACCORDING TO "STANDARDS OF PRACTICE FOR SURVEYING" IN THE STATE OF MISSISSIPPI ESTABLISHED BY THE AUTHORITY OF SECTION 73-13-15(F), MISSISSIPPI CODE OF 1972 AS AMENDED.

REFERENCE MERIDIAN – BASED ON SOUTH R/W OF PORTER STREET.

O INDICATES PROPERTY CORNERS.

FIP – FOUND 5/8" IRON PIN
SIP – SET 5/8" IRON PIN

REFERENCE MATERIALS USED:
RECORDED SUBDIVISION PLAT OF "TOWN OF RIDGELAND"
BOOK 2506 PAGE 689
BOOK 2843 PAGE 159
BOOK 3128 PAGE 935
BOOK 3426 PAGE 736
BOOK 3381 PAGE 390

MAPLE PLACE CONDOMINIUMS, REVISED

BEING A PART OF BLOCK 41
TOWN OF RIDGELAND (A SUBDIVISION)
CITY OF RIDGELAND
MADISON COUNTY, MISSISSIPPI

0.5744 ACRES
25,023 SQ. FT.

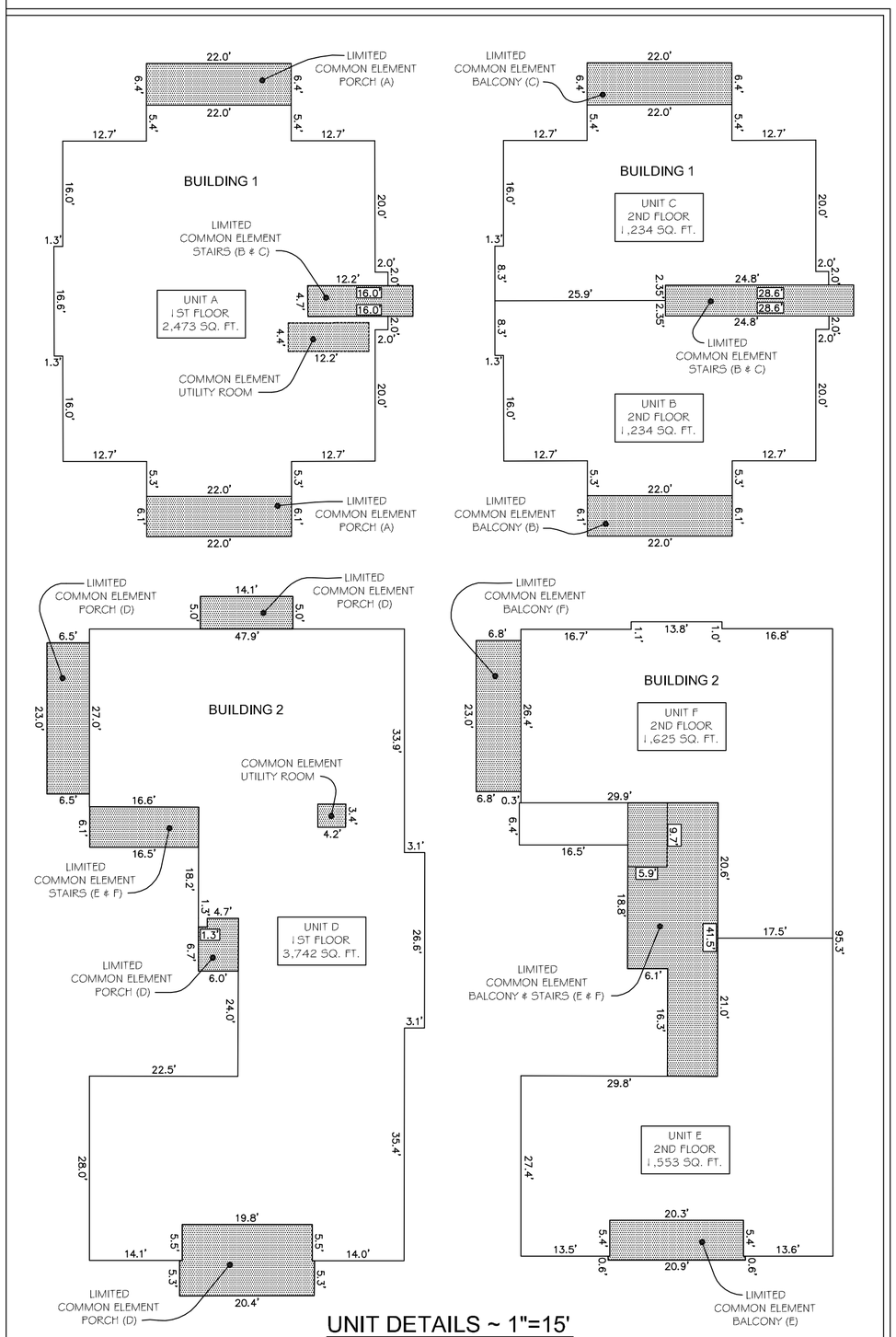

UNIT DETAILS ~ 1"=15'

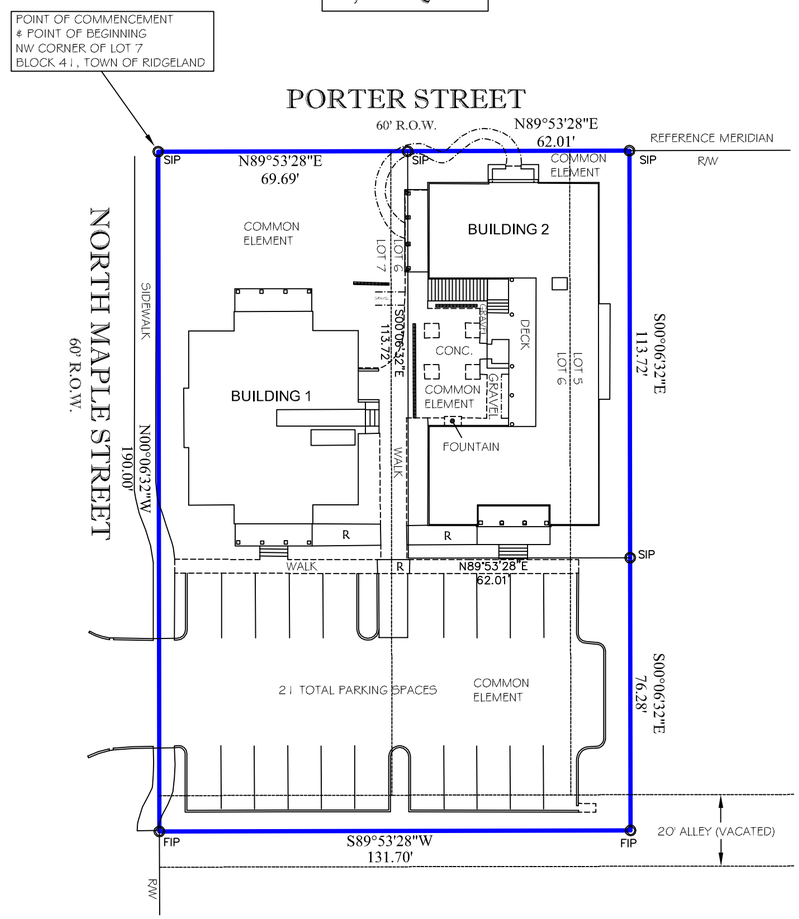

NOTES:

1. This Plat is filed pursuant to The Mississippi Condominiums Law Miss. Code Ann. Section 89-9-1 et. seq. (1972) and shall not be construed to be a dedication of any of the streets, drives or any other improvements shown hereon or in any way, now or hereafter forming a part of The Maple Place Condominiums, Revised.

2. Each and every part of the Property within the condominiums described and shown hereon is subject to the terms, provisions, covenants, conditions, restrictions, uses, limitations, prohibitions, requirements, obligations, easements, servitudes, charges, assessments, and liens declared by the Owner in that certain instrument entitled "Plan of Condominium and Declaration of Covenants, Conditions and Restrictions for the Maple Place Condominiums, ("Plans and Declaration"). The Owner is the Declarant of said Plan. Said Plan was filed in Condominium Book 2667 at Page 417 and an Amendment to and Modification of Plan of Condominium and Declaration of Covenants and Restrictions for The Maple Place Condominiums Revised and filed of record in Condominium Book _____ at Page _____.

3. All easements set out in the Plan and Declaration are valid and enforceable according to their terms notwithstanding the fact that the easements are not depicted on the Plat. The reference to the easements in this note is not a dedication of the easements to the public with the easements to remain private and run solely in favor of those parties intended to benefit from the easements as set forth in the Plan and Declaration as amended.

4. The designation of a portion of the property within the Maple Place Condominiums, Revised as common elements or limited common elements shall reserve those properties for the parties intended to benefit from the common element or limited common element (as applicable) as set forth in the Plan and Declaration, as amended.

5. The depiction on this plat of roads, parking areas and other improvements is not a dedication of the same to the public with the ownership and use thereof being reserved for the parties intended as set forth in the Plan and Declaration, as amended.

6. The property shown hereon is located in Zone "X" (Outside 500 year Flood Plain) according to Flood Insurance Rate Map Number 28089C0567F, dated March 17, 2010.

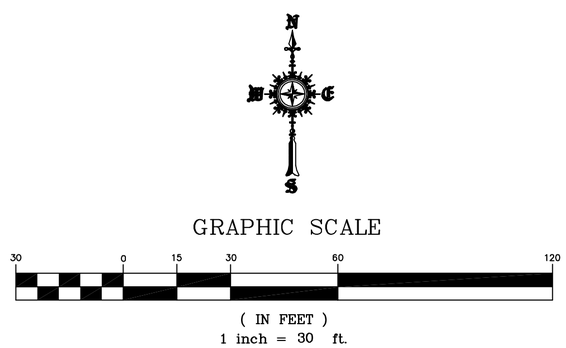

SURVEYED & MAPPED
BY
BARNES SURVEYING, LLC
ROBERT MICHAEL BARNES
LAND SURVEYOR
2 OLD RIVER PLACE, SUITE "K"
JACKSON, MISSISSIPPI 39202
PHONE: 601.353.7878 FAX: 601.353.7805
EMAIL: mike@barnessurvey.com
FIELD WORK COMPLETED: JUNE 28, 2018
PLAT DATE: JULY 11, 2018

7599-03

MAPLE PLACE CONDOMINIUMS, REVISED

SURVEYOR'S CERTIFICATE
STATE OF MISSISSIPPI
COUNTY OF MADISON

I, Robert M. Barnes, Registered Land Surveyor, do hereby certify that at the request of the Owners, being shown and named under the Owner's Certificate hereon, have surveyed and platted the following described property.

THE MAPLE PLACE CONDOMINIUMS, REVISED

Being Lots 6 and 7, the West 1/3 of Lot 5 and the North 10 feet of a vacated alley all in Block 41 of the Town of Ridgeland, a subdivision, as recorded in Plat Cabinet A at Slide 1 of the Chancery Records of Madison County at Canton, Mississippi, and located in the City of Ridgeland, Madison County, Mississippi, and being more particularly described by metes & bounds as follows, to-wit:

Commence at the Northwest corner of the said Lot 7 of Block 41, said northwest corner being the **POINT OF BEGINNING** for the parcel herein described; thence North 89° 53' 28" East for a distance of 69.69 feet along the southern right of way line of Porter Street to a 5/8" iron pin set at the northeast corner of Maple Place Condominiums recorded in Plat Cabinet E at Slides143B and 144A; thence continue North 89° 53' 28" East for a distance of 62.01 feet along the said southern right of way line to the northeast corner of that certain property described in Book 2506 at Page 689 to a 5/8" iron pin set; thence leave said Southern right of way line of Porter Street and run South 00° 06' 32" East for a distance of 113.72 feet along that said certain property described in Book 2506 at Page 689 to a 5/8" iron pin set; thence continue South 00° 06' 32" East for a distance of 76.28 feet along that said certain property described in Book 2506 at Page 689 and the extension thereof and along the said eastern line of Maple Place Condominiums to the mid-line of a vacated 20 foot wide alley to a 5/8" iron pin found; thence South 89° 53' 28" West for a distance of 131.70 feet along the said mid-line of a vacated 20 foot wide alley and along the southern line of the said Maple Place Condominiums to the Eastern right of way line of North Maple Street marked by a 5/8" iron pin found; thence North 00° 06' 32" West for a distance of 190.00 feet along the said Eastern right of way line of North Maple Street and along the western line of the said Maple Place Condominiums to the **POINT OF BEGINNING**, containing 0.5744 acres, more or less.

Witness my signature this day _____ day of _____, 2018.

_____
Robert M. Barnes
Registered Land Surveyor
LS 2583

ACKNOWLEDGEMENT
STATE OF MISSISSIPPI
COUNTY OF _____

Personally appear before me the undersigned authority in and for the said county and state on the _____ day of _____, 2018 within my jurisdiction, the within named Robert M. Barnes, who acknowledged that he executed the above and foregoing instrument.

_____
Notary Public

My Commission Expires: _____

SURVEYOR'S CERTIFICATE OF COMPLIANCE WITH SUBDIVISION REGULATIONS
STATE OF MISSISSIPPI
COUNTY OF MADISON

I hereby certify that the monuments and markers shown hereon are in place on the ground and the plan and plat shown and described hereon area true and correct representation of a survey to the accuracy designated in the Subdivision Regulations for the City of Ridgeland, Madison County, Mississippi.

Witness my signature this day _____ day of _____, 2018.

_____
Robert M. Barnes
Registered Land Surveyor

OWNER'S/DECLARANT'S CERTIFICATE
STATE OF MISSISSIPPI
COUNTY OF MADISON

We, M. Craig Robertson, Member Manager of NorthView Development, LLC, a Mississippi limited liability company, Ellen D. Steeby, Chris C. Rossohn and Carol H. Rosson do hereby certify that NorthView Development, LLC, Ellen D. Steeby, Chris C. Rosson and Carol H. Rosson are the Owners of the parcel of land or units thereon as shown on this plat described in Surveyor's Certificate of Robert M. Barnes, Registered Land Surveyor, which appears hereon; that the said owners have caused this parcel to be surveyed and platted as a condominium as shown hereon and has designated and subjected the aforesaid real property to the condominium form of ownership pursuant to The Mississippi Condominium Law. Said real property is hereby designated as the Maple Place Condominiums, Revised.

Norh View Development, LLC, a Mississippi limited liability company, is the owner of Unit A, D, E and F, as indicated by the undersigned, M. Craig Robertson, Member Manager of North View Development, LLC; Chris C. Rosson and Carol H. Rosson are the owners of Unit B and Ellen D. Steeby is the owner of Unit C.

Witness the signature of the undersigned Owner on this _____ day of _____, 2018.

North View Development, LLC
Mississippi limited liability company

By: _____
M. Craig Robertson
Member Manager

BANKFIRST FINANCIAL SERVICES

By: _____
Name: Adam R. Cox
Title: Madison President

_____
M. Craig Robertson

_____
Ellen D. Steeby

_____
Chris C. Rosson

_____
Carol H. Rosson

ACKNOWLEDGEMENT OF SIGNATURES
STATE OF MISSISSIPPI
COUNTY OF _____

Personally appeared before me the undersigned authority in and for the jurisdiction aforesaid,the within named M. Craig Robertson, who acknowledged that he is the Member Manager of North View Developement, LLC, a Mississippi limited liability company, the Owner of Units A, D, E and F, and that for and on behalf of said limited liability company, as Owner, and as its act and deed, he executed the foregoing instrument after first having been duly authorized by said limited liability company so to do.

Witness my hand and official seal of office on the the ____ day of _____2018.

My Commission Expires:

_____ _____
NOTARY PUBLIC

ACKNOWLEDGEMENT OF SIGNATURES
STATE OF MISSISSIPPI
COUNTY OF _____

Personally appeared before me the undersigned authority in and for the jurisdiction aforesaid,the within named Chris C. Rosson and Carol H. Rosson, who acknowledges to me that they are the Owners of Unit B and they executed the foregoing instrument as Owners, for the purpose therein contained.

Witness my hand and official seal of office on the the ____ day of _____2018.

My Commission Expires:

_____ _____
NOTARY PUBLIC

ACKNOWLEDGEMENT OF SIGNATURES
STATE OF MISSISSIPPI
COUNTY OF _____

Personally appeared before me the undersigned authority in and for the jurisdiction aforesaid,the within named Ellen D. Steeby, who acknowledges to me that she is the Owner of Unit C and she executed the foregoing instrument as Owner, for the purpose therein contained.

Witness my hand and official seal of office on the the ____ day of _____2018.

My Commission Expires:

_____ _____
NOTARY PUBLIC

ACKNOWLEDGEMENT OF SIGNATURES
STATE OF MISSISSIPPI
COUNTY OF _____

Personally appeared before me the undersigned authority in and for the jurisdiction aforesaid, the within named Adam R. Cox, who acknowledged that he is Madison President of Bankfirst Financial Services, and that for and on behalf of said bank, and as its act and deed, he signed and delivered the above and forgoing instrument of writing for the purposes mentioned, on the day and year therein mentioned, after first having been duly authorized by said bank so to do.

Witness my hand and official seal of office on the the ____ day of _____2018.

My Commission Expires: _____ _____
NOTARY PUBLIC

CITY PLANNING AND ENGINEER'S APPROVAL
STATE OF MISSISSIPPI
CITY OF RIDGELAND
COUNTY OF MADISON

We have examined this plat and find that it conforms to all conditions set forth on the preliminary plat as approved by the Mayor and Board of Alderman and thus recommend final approval.

_____
Public Works Director

_____
Chairman, City Plannin and Zoning Board

CITY APPROVAL CERTIFICATE
STATE OF MISSISSIPPI
CITY OF RIDGELAND
COUNTY OF MADISON

I hereby certify that this is a true copy and that this plat was approved by the Mayor and Board of Alderman in session on this the ____ day of _____, 2018.

ATTEST:

_____
City Clerk
City of Ridgeland

_____
Mayor
City of Ridgeland

FILING AND RECORDATION
STATE OF MISSISSIPPI
COUNTY OF MADISON

I, Ronny Lott, Clerk of the Chancery Court in and for said county and state, do hereby certify that this plat of Maple Place Condominiums, Revised was filed for record in my office on the _____ day of _____, 2018, and was duly recorded in Plat Cabinet ____ in Slide _____ of the records of maps and plats of land in Madison County, Mississippi.

Given under my hand and seal of office on this the ____ day of _____, 2018.

Ronny Lott, Chancery Clerk

_____
Deputy Clerk

Prepared by and return to:
Gee Ogletree, MB #3915
Adams and Reese LLP
300 Renaissance
1018 Highland Colony Parkway, Suite 800
Ridgeland, Mississippi 39157
(601) 292-0740

Indexing Instructions: **Lots 5, 6 and 7, Block 41, Town of Ridgeland, Madison County, Mississippi**

AMENDMENT TO AND MODIFICATION OF PLAN OF CONDOMINIUM AND DECLARATION OF COVENANTS, CONDITIONS AND RESTRICTIONS FOR THE MAPLE PLACE CONDOMINIUMS

DATED JULY ___, 2018

Declarant: **NorthView Development, LLC**
P.O. Box 2055
Ridgeland, Mississippi 39158
(601) 898-8655

STATE OF MISSISSIPPI
COUNTY OF MADISON

NorthView Development, LLC, a Mississippi limited liability company (the "Declarant"), files this Amendment to and Modification of Plan of Condominium Conditions and Restrictions for The Maple Place Condominiums (this "Amendment") this the ___ day of January, 2018.

RECITALS

Whereas, the Declarant filed the Plan of Condominium and Declaration of Covenants, Conditions and Restrictions for The Maple Place Condominiums dated May 18, 2011 in the office of the Chancery Clerk of Madison County, Mississippi on May 18, 2011 at 10:45 a.m. in Book 2667 at page 417 (the Plan and Declaration);

Whereas, the plat of Maple Place Condominiums recorded in Plat Cabinet E-143B at Slide 144 A and B has been amended by the Amended Plat of maple Place Condominiums and is being recorded in the land records of the Office of the Chancery Clerk of Madison County, Mississippi to reflect the addition of another building with three condominiums as anticipated by the Plan and Declaration;

Whereas, Section 17.3 of the Plan and Declaration provides the Declarant with the right to expand the Property (as defined in the Plan and Declaration) and to add additional Condominiums by filing of record an amendment to this Plan and Declaration;

Whereas, the Declarant desires to expand the Property to add an additional building with three additional Condominiums by filing this Amendment to the Plan and Declaration;

Whereas, no consent of Mortgagees is required for this Amendment in that this Amendment does not materially impair the rights, priorities, remedies or interests of a Mortgagee and consent is not otherwise required by the Federal national Mortgage Association or the Federal Home Loan Mortgage Corporation; and,

Whereas, this Amendment ands and Modifies the Plan and Declaration as set forth herein by restating the Plan and Declaration and setting out the amended provisions thereof with all other provisions of the Plan and Declaration to continue in full force and effect. The use of **** in this Amendment shall indicate sections of the Plan and Declaration that are not changed.

DECLARATION

NOW, THEREFORE, the Declarant and all recorded holders of a security interest in the Property established by the Plan and Declaration as amended by this Amendment, establish the Plan and Declaration as amended and record this Amendment in the office of the chancery Clerk of Madison County, Mississippi for the purpose of submitting to condominium form of ownership pursuant to the Condominium Act as referenced in the Plan and Declaration.

Declarant hereby declares that this Plan and Declaration as amended shall subject the Property therein to be held, sold, transferred and conveyed subject to the easements, restrictions, covenants and conditions herein, which shall run with the land and be binding on all parties, their heirs, successors and assigns having any right, title or interest in such Property or any part thereof, and shall insure to the benefit of each owner thereof to-wit:

****

2.3. Legal Description. The legal description of the Property and the plot plan and survey of the Condominium, Common Elements and Limited Common Elements (including that added by this Amendment) is depicted on Exhibit "A" attached hereto and incorporated herein by reference with Exhibit "A" being substituted for the original Exhibit "A" in full replacement thereof.

2.4 Unit Designations. The Unit designations and Floor plans of the two buildings and each Unit therein are depicted on Exhibit "B" attached hereto and incorporated herein by reference with Exhibit "B" being substituted for the original Exhibit "B" in full replacement thereof.

2.5 Common Area Interest. The undivided interest in the Common Elements and the Common Surplus and responsibility for the Common Expenses assigned to each Unit of each building is depicted on Exhibit "C" attached hereto and incorporated herein by reference with Exhibit "C" being substituted for the original Exhibit "C" in full replacement thereof.

****

5.3 Voting. The Association shall have one class of membership,

(a) Class "A." Class "A" members shall be all owners. Class "A" members shall be entitled to one (1) proportional Unit Vote as provided herein.

(b) Intentionally deleted (in that the Class "B" membership is terminated and only Class "A" membership shall exist.).

(c) Unit Votes. Each Unit within a Condominium shall be assigned a proportional vote as a Unite Vote (Class "A" Vote) based on its percentage interest in the Common Elements of the Condominium buildings. This percentage interest shall be set forth on Exhibit "C."

(d) Intentionally deleted.

****

6.2 (b) Intentionally deleted.

****

6.4 Removal. Any director may be removed from office as provided in the Condominium Act.

****

7.2 Calling Association Meetings. The Association shall call an annual meeting for the election of Members of the Board and may call additional meetings for information purposes or whenever any action is required by this Plan and Declaration, as Amended, to be taken by vote or assent in writing of the Members.

****

18.7 Certificate of Consent by Secured Parties. By executing the Amendment to and Modification of Plan of Condominium and Declaration of Covenants, Conditions and Restrictions for The Maple Place Condominiums, BankFirst Financial Services, being the holder of recorded security interests in real property originally described in the Plan and Declaration and also being the holder of recorded security interests in the real property described in this Amended Plan and Declaration pursuant to the provisions of Section 89-9-1, et. seq., Mississippi Code of 1972 Annotated, except that the said BankFirst Financial Services, its trustees, officers, employees and agents shall have no liability whatsoever, expressed or implied, in connection with this Amended and Restated Plan of Condominium, its terms, conditions, restrictions or provisions, which limitation of liability is hereby conclusively accepted by the Declarant.

****

[The remainder of this page is intentionally left blank]

IN WHITNESS WHEREOF, the undersigned, being the Declarant, does hereby make this Amended and Restated Plan of Condominium and Declaration of Covenants, Conditions and Restrictions for the Maple Place Condominiums.

DECLARANT **NORTHVIEW DEVELOLPMENT, LLC**
a Mississippi limited liability company

By: _____
Name: M. Craig Robertson, Member Manager

SECURED PARTY **BANKFIRST FINANCIAL SERVICES**

By: _____
Name: Adam Cox
Title: _____

STATE OF MISSISSIPPI
COUNTY OF _____

PERSONALLY appeared before me, the undersigned authority in and for the said county and state, on this the ___ day of July, 2018, within my jurisdiction, this within named M. Craig Robertson who acknowledge that he is the Member Manager and the sole member of NorthView Development, LLC, a Mississippi member-managed limited liability company, and that for and on behalf of said limited liability company and as its act and deed, he executed the above and foregoing instrument, after having first been duly authorized by said limited liability company so to do.

_____
Notary Public

My Commission Expires: _____

(Seal)

STATE OF MISSISSIPPI
COUNTY OF _____

PERSONALLY appeared before me, the undersigned authority in and for the said county and state, on this the ___ day of July, 2018, within my jurisdiction, this within named Adam Cox who acknowledge that he is the _____ of BankFirst Financial Services, a Mississippi bank, and that for an on behalf of said bank and as its act and deed, he executed the above and foregoing instrument, after having first been duly authorized by said bank so to do.

_____
Notary Public

My Commission Expires: _____

(Seal)

EXHIBIT "A"

LEGAL DESCRIPTION OF THE MAPLE PLACE CONDOMINIUMS

THE MAPLE PLACE CONDOMINIUMS, REVISED

Being Lots 6 and 7, the West 1/3 of Lot 5 and the North 10 feet of a vacated alley all in Block 41 of the Town of Ridgeland, a subdivision, as recorded in Plat Cabinet A at Slide 1 of the Chancery Records of Madison County at Canton, Mississippi, and located in the City of Ridgeland, Madison County, Mississippi, and being more particularly described by metes & bounds as follows, to-wit:

Commence at the Northwest corner of the said Lot 7 of Block 41, said northwest corner being the **POINT OF BEGINNING** for the parcel herein described; thence North 89° 53' 28" East for a distance of 69.69 feet along the southern right of way line of Porter Street to a 5/8" iron pin set at the northeast corner of Maple Place Condominiums recorded in Plat Cabinet E at Slides143B and 144A; thence continue North 89° 53' 28" East for a distance of 62.01 feet along the said southern right of way line to the northeast corner of that certain property described in Book 2506 at Page 689 to a 5/8" iron pin set; thence leave said Southern right of way line of Porter Street and run South 00° 06' 32" East for a distance of 113.72 feet along that said certain property described in Book 2506 at Page 689 to a 5/8" iron pin set; thence continue South 00° 06' 32" East for a distance of 76.28 feet along that said certain property described in Book 2506 at Page 689 and the extension thereof and along the said eastern line of Maple Place Condominiums to the mid-line of a vacated 20 foot wide alley to a 5/8" iron pin found; thence South 89° 53' 28" West for a distance of 131.70 feet along the said mid-line of a vacated 20 foot wide alley and along the southern line of the said Maple Place Condominiums to the Eastern right of way line of North Maple Street marked by a 5/8" iron pin found; thence North 00° 06' 32" West for a distance of 190.00 feet along the said Eastern right of way line of North Maple Street and along the western line of the said Maple Place Condominiums to the **POINT OF BEGINNING**, containing 0.5744 acres, more or less.

EXHIBIT "B"

UNIT DESIGNATION OF THE MAPLE PLACE CONDOMINIUMS

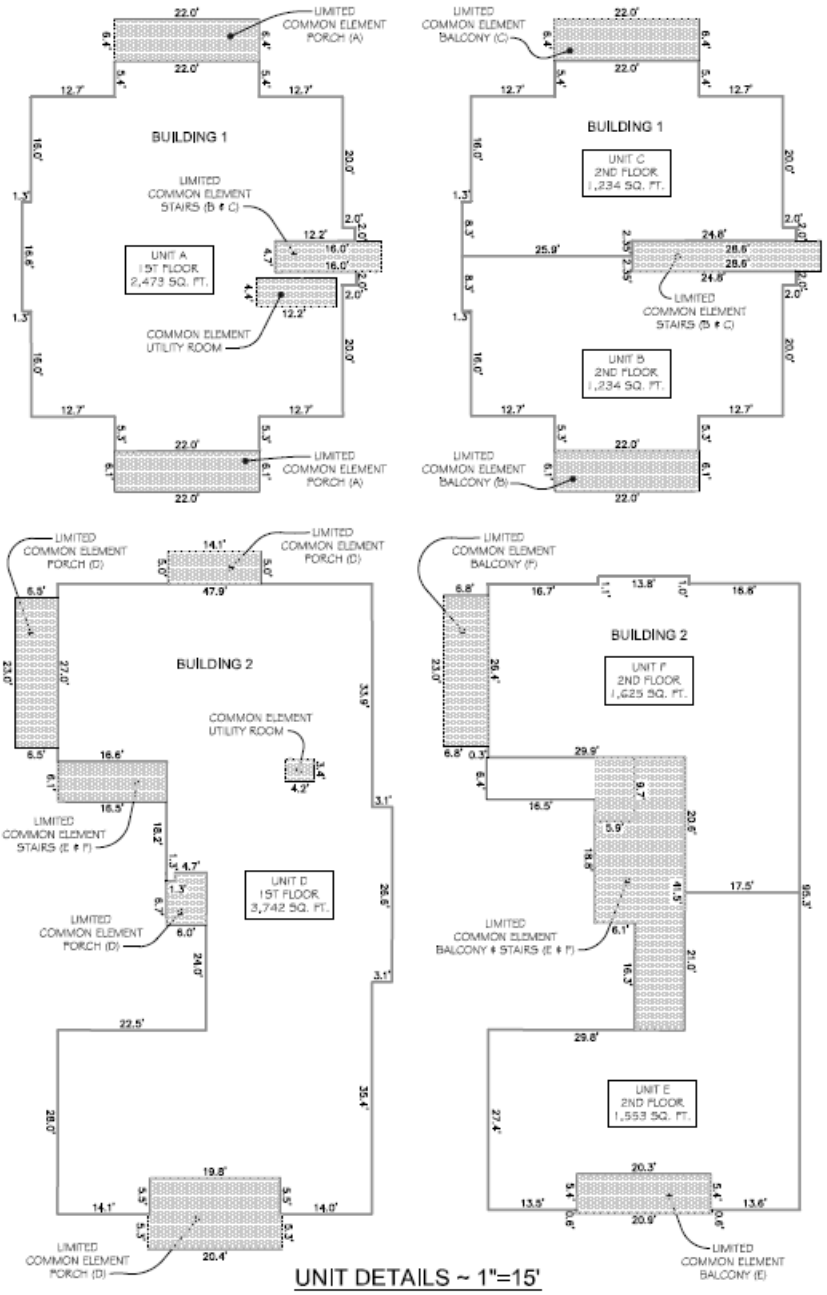

UNIT DETAILS ~ 1"=15'

EXHIBIT "C"

COMMON AREA INTERST OF THE UNIT OWNERS OF
THE MAPLE PLACE CONDOMINIUMS

BUILDING 1 AND BUILDING 2 - SUM OF SQUARE FEET OF UNITS A - F IN BOTH BUILDINGS 11,841 S.F.

BUILDING 1: (4,941 Square Feet)

- UNIT A 21% (representing 2,473 square feet)
- UNIT B 10% (representing 1,234 square feet)
- UNIT C 10% (representing 1,234 square feet)

BUILDING 2: (6,900 Square Feet)

- UNIT D 32% (representing 3,742 square feet)
- UNIT E 13% (representing 1,533 square feet)
- UNIT F 14% (representing 1,625 square feet)

BY-LAWS

OF

MAPLE PLACE CONDOMINIUMS PROPERTY OWNERS ASSOCIATION , INC.

ARTICLE I.

NAME AND LOCATION

The name of the Association is Maple Place Condominiums Property Owners Association, Inc. ("the Association"), which corporation, not-for-profit, is created pursuant to the provisions of Miss. Code Ann. Section 79-11-101, et. seq., the Mississippi Nonprofit Corporation Act, and is also created pursuant to Miss. Code Ann. Section 89-9-1 et. seq., the Mississippi Condominium Law. The principal office of the Association shall be set forth in the Articles of Incorporation (the "Articles"), and the place of meetings of Unit owners (members) and of the Directors (Board of Directors, also known as the Board of Governors) of the Association shall be at such place in Rankin, Hinds, or Madison Counties as the Board of Directors (the "Board"), may from time to time designate.

ARTICLE II.

DEFINITIONS

All of the terms used herein shall have the same meanings as set forth in the Plan of Condominium and Declaration of Covenants, Conditions, and Restrictions for the Maple Place Condominiums (the "Plan and Declaration"), recorded or to be recorded in the Land Records of Madison County, Mississippi. The Board of Directors shall serve as the Board of Governors for the purposes of management as set forth in the Mississippi Condominium Law.

ARTICLE III.

UNIT OWNERS (MEMBERS)

Section 1. Composition. Each Unit owner, as defined in the Declaration, is a member of the Association. Membership in the Association shall continue for so long as the member owns the Unit and shall not be severable from ownership of the Unit.

Section 2. Annual Meetings. Regular annual meetings of the Unit owners shall be held in the first calendar quarter of each year hereafter, on a date and at an hour established, from time to time, by the Board, provided that, in any event, there shall be no more than eighteen (18) months between annual meetings of the members.

Section 3. Special Meetings. Special meetings of the Unit owners may be called at any time by the president or by the Board, or upon written request of Unit owners entitled to exercise one-fourth (1/4) or more of the voting power of Unit owners (Class A membership).

Section 4. Notice of Meetings. Written notice of each meeting of Unit owners shall be given by, or at the direction of, the secretary or person authorized to call the meeting, by mailing a copy of such notice, postage prepaid, at least five days before such meeting, to each Unit owner entitled to vote at such meeting, addressed to the Unit owner's address last appearing on the books of the Association, or supplied by such Unit owner to the Association for the purpose of notice, or by delivering a copy of that notice at such address at least five (5) days before the meeting. The notice shall specify the place, day and hour of the meeting, and, in the case of a special meeting, the purpose of the meeting.

Section 5. Waiver of Notice. Waiver of notice of a meeting of the members shall be deemed the equivalent of proper notice. Any member may, in writing, waive notice of any meeting of the members, either before or after such meeting. Attendance at a meeting by a member, whether in person or by proxy, shall be deemed waiver by such member of notice of the time, date, and place thereof, unless such member specifically objects to lack of proper notice at the time the meeting is called to order.

Section 6. Quorum: Adjournment. The Unit owners present, in person or by proxy, at any duly called and noticed meeting of Unit owners, shall constitute a quorum for such meeting. The meeting may be held in person or by telephone, video, internet, or conference by which all Members present can be heard as determined by the Member chairing the meeting. Unit owners entitled to exercise a majority of the voting power of Unit owners represented at a meeting may, at any time, adjourn such meeting. If any meeting is so adjourned, notice of such adjournment need not be given if the time and place to which such meeting is adjourned are fixed and announced at such meeting.

Section 7. Proxies. At any meeting of Unit owners, a Unit owner may vote in person or by proxy. All proxies shall be in writing and filed with the secretary prior to the meeting. A telegram, cablegram, photographic, photostatic, facsimile, printed email, text or other electronic communication, or equivalent reproduction of a writing, appointing a proxy, is a sufficient writing. Every proxy shall be revocable and shall automatically cease upon conveyance by a Unit owner of his, her or its Unit, and, in any event, shall not be valid after the expiration of eleven months after it is made unless it specifies the date on which it is to expire or the length of time it is to continue in force.

Section 8. Voting Power. Except as otherwise provided in the Condominium organizational documents, or by law, a majority of the voting power of applicable percentage interest of the Class "A" Unit owners voting on any matter that may be determined by the Unit owners at a duly called and noticed meeting shall be sufficient to determine that matter. The rules of Roberts Rules of Order shall apply to the conduct of all meetings of Unit owners except as otherwise specifically provided in the Condominium organizational documents or by law.

Section 9. Action in Writing Without Meeting. Any action that could be taken by Unit owners at a meeting may be taken without a meeting as provided in the Plan and Declaration.

ARTICLE IV.

BOARD OF DIRECTORS; (BOARD OF GOVERNORS)

Section 1. Board of Directors. The affairs of the Association shall be governed by a Board of Directors.

Section 2. Initial Directors. The initial Directors shall be those three persons named as the initial Directors by the incorporator of the Association, or such other person or persons as may from time to time be substituted by the Declarant.

Section 3. Declarant's Rights. Declarant's rights to appoint three directors shall be as provided in the Plan and Declaration.

Section 4. Number of Directors. The Board shall consist of three (3) members.

Section 5. Nomination of Directors. Subject to Declarant's rights set forth in the Plan and Declaration, nominations for the election of Directors to be elected by the Unit owners shall be made by the Board or by a nominating committee appointed by the Board.

Section 6. Election and Term of Office. Notwithstanding any other provision contained herein:

(a) Not later than thirty (30) days after the Class "B" membership terminates, the Association shall call a special meeting to be held at which members shall elect three (3) Directors.

(b) At annual meetings of the membership thereafter, Directors shall be elected. All eligible members of the Association shall be allowed to vote on all Directors to be elected, and the candidate(s) receiving the most votes according to the percentage of the Owners of Units shall be elected; provided, however, those Directors serving at the time of the first annual

meeting after the termination of the Class "B" membership shall serve the remainder of their terms.

(c) The term of one (1) Director shall be fixed at one (1) year, the term of one (1) Director shall be fixed at two (2) years, and the term of one (1) Director shall be fixed at three (3) years. At the expiration of the initial term of office of each respective member of the Board of Directors, a successor shall be elected to serve for a term of three (3) years. The members of the Board of Directors shall hold office until their respective successors shall have been elected by the Association.

(d) The Declarant, in its sole discretion, may call meetings earlier than required herein and/or may permit Class "A" members to elect a larger number of Directors at any meeting than required herein.

Section 7. Removal of Directors. At any regular or special meeting of the Association duly called, any one or more of the members of the Board of Directors may be removed, with or without cause, by a majority vote according to the percentage of the Owners of Units of the Class "A" members upon the consent of the Class "B" members (if Class "B" members exist at that time) and a successor may then and there be elected to fill the vacancy thus created. A Director whose removal has been proposed by the owners shall be given at least ten (10) days' notice of the calling of the meeting and the purpose thereof and shall be given an opportunity to be heard at the meeting. Additionally, any Director who has three (3) consecutive unexcused absences from Board meetings or who is delinquent in the payment of any assessment for more than sixty (60) days may be removed by a majority vote of the Directors at a meeting, a quorum being present.

Section 8. Vacancies. Vacancies in the Board of Directors caused by any reason, excluding the removal of a Director by vote of the Association, shall be filled by a vote of the majority of the remaining Directors, even though less than a quorum, at any meeting of the Board of Directors. Each person so selected shall serve the unexpired portion of the term.

Section 9. Compensation. Unless otherwise determined by the Unit owners at a meeting duly called and noticed for such purpose, no Director shall receive compensation for any service rendered to the Association as a Director. However, any Director may be reimbursed for his or her actual expenses incurred in the performance of duties.

Section 10. Regular Meetings. Regular meetings of the Board shall be held on such dates and at such places and times as may be fixed from time to time by resolution of the Board, but not less than quarterly.

Section 11. Special Meetings. Special meetings of the Board shall be held when called by the president of the Board, or by a majority of the Board, after not less than three days notice to each Director.

Section 12. Waiver of Notice. The transactions of any meeting of the Board of Directors, however called and noticed or wherever held, shall be as valid as though taken at a meeting duly held after regular call and notice, if (a) a quorum is present, and (b) either before or after the meeting, each of the Directors not present signs a written waiver of notice, a consent to holding the meeting, or an approval of the minutes. The waiver of notice or consent need not specify the purpose of the meeting. Notice of a meeting shall also be deemed given to any Director who attends the meeting without protesting before or at its commencement about the lack of adequate notice.

Section 13. Quorum. At all meetings of the Board of Directors, a majority of the Directors shall constitute a quorum for the transaction of business, and the votes of a majority of the Directors present at a meeting at which a quorum is present shall constitute the decision of the Board of Directors. A meeting at which a quorum in initially present may continue to transact business, notwithstanding the withdrawal of Directors, if any action taken is approved by at least a majority of the required quorum for that meeting. If any meeting cannot be held because a quorum is not present, a majority of the Directors who are present at such meeting may adjourn the meeting to a time not less than five (5) nor more than thirty (30) days from the time that the original meeting was called. At such adjourned meeting at which a quorum is present, any business which might have been transacted at the meeting originally called may be transacted without further notice.

Section 14. Voting Power. Each Director shall be entitled to a single vote, and, except as otherwise provided in the Condominium organizational documents, or by law, vote of a majority of the Directors voting on any matter that may be determined by the Board at a duly called and notice meeting at which a quorum is present, in person or by participation as provided above, shall be sufficient to determine that matter.

Section 15. Open Meetings. All meetings of the Board shall be open to all members, but members other than Directors may not participate in any discussion or deliberation unless expressly authorized by the Board. Upon vote of the Board as provided in Section 16, the Board shall have the right to go into executive session and close the meeting to Members and others who are not directors.

Section 16. Executive Session. The Board may temporarily adjourn a meeting and reconvene in executive session to discuss and vote upon personnel matters, litigation in which the Association is or may become involved, and orders of business or a similar nature. The nature of any and all business to be considered in executive session shall first be announced in open session.

Section 17. Action in Writing Without Meeting. Any action that could be taken by the Board at a meeting may be taken without a meeting as provided in the Plan of Condominium.

Section 18. Powers. The Board shall exercise all powers and authority, under law, and under the provisions of the Condominium organizational documents, that are

not specifically and exclusively reserved to the Unit owners by law or by other provisions thereof, and without limiting the generality of the foregoing, the Board shall have the right, power and authority to:

(a) take all actions deemed necessary or desirable to comply with all requirements of law, and the Condominium organizational documents;
(b) obtain insurance coverage pursuant to the Plan and Declaration or as determined appropriate by the Board;
(c) enforce the covenants, conditions and restrictions set forth in the Declaration;
(d) repair, maintain and improve the Common Elements and Limited Common Elements;
(e) establish, enforce, levy and collect assessments, late fees, delinquent interest, and such other charges as are provided for in the Plan and Declaration;
(f) adopt and publish rules and regulations governing the use of the Common Elements and Limited Common Elements and the personal conduct of Unit owners, occupants and their guests thereon, and establish and levy enforcement charges for the infraction thereof;
(g) suspend the voting rights of a Unit owner during any period in which such Unit owner shall be in default in the payment of any charge levied by the Association;
(h) declare the office of a member of the Board to be vacant in the event such Director shall be absent from three consecutive regular meetings of the Board;
(i) subject to such approvals, if any, as may be required pursuant to the provisions of Condominium organizational documents, authorize the officers to enter into one or more agreements necessary or desirable to fulfill the purposes and objectives of the Association, including, without limitation, management agreements, purchase agreements and loan documents, all on such terms and conditions as the Board in its sole and absolute discretion may determine;
(j) cause funds of the Association to be invested in institutions or such reasonable investments as the Board may from time to time determine;
(k) borrow funds, as needed, and pledge such security and rights of the Association as might be necessary or desirable to obtain any such loan;
(l) impose fines and penalties as provided by the Declaration; and
(m) do all things and take all actions permitted to be taken by the Association by law, or the Condominium organizational documents not specifically reserved thereby to others.

Section 19. Duties. It shall be the duty of the Board to:

(a) cause to be kept a complete record of all its acts and corporate affairs and to present a statement thereof to the Unit owners at each annual meeting of Unit owners, or at any special meeting when such statement is required

in writing by Unit owners representing one-half (1/2) or more of the voting power of Class "A" Unit owners;

(b) supervise all officers, agents and employees of the Association and see that their duties are properly performed;

(c) cause an annual budget to be prepared;

(d) as more fully provided in the Declaration, to establish, levy, enforce and collect assessments;

(e) issue, or to cause an appropriate representative to issue, upon demand by any person, a certificate setting forth whether or not any assessment has been paid;

(f) procure and maintain insurance and bonds as provided in the Declaration, and as the Board deems advisable;

(g) cause the property subject to the Association's jurisdiction to be maintained within the scope of authority provided in the Plan and Declaration;

(h) cause the restrictions created by the Plan and Declaration to be enforced; and

(i) take all other actions required to comply with all requirements of law and the Condominium organizational documents.

Section 20. Management Agent. The Board of Directors may employ for the Association a management agent or agents at a compensation established by the Board of Directors to perform such duties and services as the Board of Directors shall authorize. The Declarant or any affiliate of the Declarant may be employed as managing agent or Manager.

ARTICLE V.

OFFICERS

Section 1. Enumeration of Officers. The officers of this Association shall be a president, a secretary, a treasurer and such other officers as the Board may from time to time determine. No officer other than the President need be a member of the Association, nor need any officer be a Director. The same person may hold more than one office.

Section 2. Selection and Term. Except as otherwise specifically provided in the Declaration or by law, the officers of the Association shall be selected by the Board, from time to time, to serve until the Board selects their successors.

Section 3. Special Appointments. The Board may elect such other officers as the affairs of the Association may require, each of whom shall hold office for such period, have such authority, and perform such duties as the Board may, from time to time, determine.

Section 4. Resignation and Removal. Any officer may be removed from office, with or without cause, by the Board. Any officer may resign at any time by giving written notice to the board, the president, or the secretary. Such resignation shall take effect on the date of receipt of such notice or at any later time specified therein, and the acceptance of such resignation shall not be necessary to make it effective.

Section 5. Duties. The duties of the officers shall be as the Board may from time to time determine. Unless the Board otherwise determines, the duties of the officers shall be as follows:

(a) President. The president shall preside at all meetings of the Board, shall have the authority to see that orders and resolutions of the Board are carried out, and shall sign all legal instruments on behalf of the Association.

(b) Secretary. The secretary shall record the votes and keep the minutes and proceedings of meetings of the Board and of the Unit owners, serve notice of meetings of the Board and of the Unit owners, keep appropriate current records showing the names of Unit owners of the Association together with their addresses, and shall act in the place and stead of the president in the event of the president's absence or refusal to act.

(c) Treasurer. The treasurer shall assume responsibility for the receipt and deposit in such bank accounts, and investment of funds in such vehicles, as the Board directs, the disbursement of such funds as directed by the Board, the keeping of proper books of account, the preparation of a proposed annual budget and a statement of income and expenditures to be presented to the Unit owners at annual meetings, and the delivery or mailing of a copy of each to each of the Unit owners.

ARTICLE VI.

COMMITTEES

The Board shall appoint a nominating committee and may appoint such other committees as it deems appropriate in carrying out its purposes.

ARTICLE VII.

BOOKS AND RECORDS

The books, records and financial statements of the Association, including annual financial statements when such are prepared in the discretion of the Association or as provided by the Declaration, shall be available during normal business hours or under

other reasonable circumstances, upon request to the Association, for inspection by Unit owners and the holders, insurers and guarantors of first mortgages on Units as provided in the Declaration. Likewise, during normal business hours or under other reasonable circumstances, the Association shall have available for inspection by Unit owners, holders, insurers guarantors of first mortgages on Units, and prospective purchasers, current copies of the Condominium organizational documents and the rules and regulations governing operation of the Condominium as provided in the Declaration.

ARTICLE VIII.

AUDITS

The Board may cause the preparation and furnishing of an audit of the accounts in the manner as the Board of Directors may decide.

ARTICLE IX.

FISCAL YEAR

Unless otherwise changed by the Board, the fiscal year of the Association shall begin on the first day of January and end on the 31st day of December of every year, except that the first fiscal year shall begin on the date of incorporation of this Association.

ARTICLE X.

CONFLICTS

If there are conflicts or inconsistencies between the provisions of Mississippi law, the Articles of Incorporation, the Plan and Declaration and these By-Laws, the provisions of Mississippi law, the Plan and Declaration, the Articles of Incorporation, and the By-Laws (in that order) shall prevail.

ARTICLE XI.

AMENDMENTS

Any modification or amendment of these By-Laws shall be made only by the vote required for an amendment to the Plan and Declaration. Such amendment shall be effective from the date of the amendment.

IN TESTIMONY WHEREOF, the undersigned, the initial directors of the Association, have caused these By-Laws to be duly adopted on or as of the 17th day of May, 2011.

MAPLE PLACE CONDOMINIUMS PROPERTY OWNERS ASSOCIATION, INC.

By: _____
M. Craig Robertson
Its: President-Secretary

RULES AND REGULATIONS CONCERNING USE OF MAPLE PLACE CONDOMINIUMS

The Maple Place Condominiums Property Owners Association, Inc. (hereinafter "Association"), acting through its Board of Directors (hereinafter "Board"), has adopted the following Rules and Regulations (hereinafter "Regulations"). These Regulations may be amended from time to time by the Board.

These Regulations shall be supplementary and in addition to the provisions of the Plan of Condominium and Declaration of Covenants, Conditions and Restrictions for the Maple Place Condominiums (the "Plan and Declaration") and the Articles of Incorporation and By-Laws of the Maple Place Condominiums Property Owners Association, Inc. As used in these Regulations, the term "Unit Owners" shall apply to the Owner of any Unit, to their family, tenants (whether or not in residence), servants, employees, agents, contractors and visitors, and to any guests, invitees or licensees of that Unit Owner, his family or tenant of that Unit Owner. As used in these Regulations, the term "Association" shall include the Association and any Managing Agent when the Managing Agent is acting on behalf of the Association. Capitalized terms used herein and not otherwise defined shall have the same meaning as in the Plan and Declaration. The Association reserves the right to alter, amend, modify, repeal or revoke these Regulations, and any consent or approval given hereunder, at any time by resolution of the Association or the Board.

The following are the Regulations adopted by the Board:

GENERAL:

1. Inform Others of Rules. All Unit Owners are to inform non-owners upon the Condominium Property of these Rules and Regulations.

2. No Loitering. Neither occupants nor their guests shall play, lounge or loiter in the entrances, passages, stairways, sidewalks of the Condominium building or other area designated by the Board.

3. Notice of Damage. Any damage to a Unit, Common Elements or Limited Common Elements shall be immediately reported in writing to the Board.

4. Assessment for Damage. Any damage to any Common Elements, Limited Common Elements for Units or the Condominium building resulting from the misuse thereof shall be assessed to the applicable Unit Owner.

5. Repair of Condominium. The Board may from time to time use any portion of the Common Elements or Limited Common Elements for the maintenance,

repair or inspection of the Condominium building.

6. No Liability of Developer or Association. Developer and Association shall not be responsible to the Unit Owners for any loss of money, jewelry or other personal property from the Property or any injury or death to any person on the Property. Unit Owners shall also report any thefts or losses to the Board as soon as reasonably possible after discovery.

7. Violations. Complaints regarding the Condominium or any violation of these rules or the Condominium or Association documents shall be made in writing to the Board.

8. Consents. Any consent or approval given under these Rules and Regulations may be added to, amended or repealed at any time by resolution of the Board.

9. Identification. Unit Owners and their employees, guests and invitees may be called upon to show suitable identification when on the Property and shall cooperate fully with Association in complying with such requirements.

10. No Guards or Security. Unit Owners unanimously decided not to engage guards or security on the Property and shall exercise due care with all of their activities.

11. No Smoking in Units or Enclosed Common Areas. There shall be no smoking within any Unit or any enclosed part of any Common Area within a Condominium building.

COMMON ELEMENTS AND LIMITED COMMON ELEMENTS (GENERAL)

12. Use. The Common Elements and Limited Common Elements shall be used only by the Unit Owners and their agents, servants, tenants, family members, invitees and licensees for the purposes intended by the Condominium documents and the Association documents.

13. Alteration and Repair. Unit Owners are reminded that alteration and repair of the Common Elements and Limited Common Elements are the responsibility of the Association, except as otherwise stated in the Plan and Declaration to be the responsibility of a Unit Owner. No work of any kind is to be done upon or affecting those portions of exterior building walls or interior boundary walls which are the responsibility of the Association without first obtaining the approval required by the Plan and Declaration.

14. Placement of Items in Common Elements or Limited Common Elements. No article (including, but not limited to, garbage cans, bottles or mats) shall be placed in any of the Common Elements or Limited Common Elements except those areas specifically designated by the Association. Nothing shall be hung or shaken from any doors, windows, porches, balconies or placed upon the windowsills of the Condominium

building.

15. Outdoor Cooking Grills. No gas, charcoal or other grill, range or cooking device of any kind shall be installed or used on any Porch or Balcony. Portable grills and cooking devices may be used in areas of the Common Elements as specifically designated by the Board, provided the same are safely and properly used.

16. Appropriate Attire. All persons shall be properly attired when appearing in any Common Areas or Limited Common Areas.

17. Clotheslines and Laundry. No clothesline or other clothes drying apparatus shall be permitted in any part of a Unit where it may be visible from the Common Elements or outside the Condominium building. Towels, clothing and laundry shall not be hung on porches or balconies or where visible from the outside.

USE AND OPERATION OF UNITS

18. Prior Approval Required for Work. No Unit Owner may install any plumbing, wiring, heating, ventilation, air conditioning or other equipment without the prior written approval of the Board.

19. Decorations. Except as otherwise authorized by the Board, no stairwell or exterior portion of the Condominium building shall be decorated or furnished by any Unit Owner in any manner.

20. Good Condition. Each Unit Owner shall keep his Unit in a good state of preservation and cleanliness, and shall not sweep or throw (or permit to be swept or thrown) therefrom or from the doors, windows, porches or balconies thereof or pertaining thereto, any dirt, refuse, trash, debris or other substance whatsoever.

21. Approval Required for Decorations Visible from Outside. No window or door guards or other window or door decorations visible from the exterior of the Condominium building shall be used in or about any Unit except such as shall have been approved in writing by the Board. Any window coverings on the floors visible from the outside, any signs or decorations in the floor windows, doors, or balconies, porches, or otherwise that are visible from outside the building, and all porch and balcony furnishings and other objects visible from outside must be approved by the Board. In addition, the Board may require removal of balcony or porch furnishings or decorative items, including plants, banners or wind chimes, that are distracting or not in keeping with the rest of the building.

22. Structural Integrity. Nothing shall be done in any Unit or on the Common Elements or Limited Common Elements that may impair the structural integrity of the Condominium building or that may change the Condominium building structurally, nor shall anything be altered or constructed on or removed from the Common Elements or

Limited Common Elements, except upon the prior written consent of the Board.

23. Antenna or Other Projecting Items. No radio, television, satellite or other antenna shall be attached to, hung or projected from the exterior of the Condominium building and no sign, notice, advertisement or illumination shall be inscribed or exposed on any part of the exterior of the Condominium building or otherwise visible from the exterior thereof except as first approved in writing by the Board.

24. Electronic Equipment. All radio, television, computer, internet, or other electronic equipment or devices of any kind or nature installed or used in each Unit or the Limited Common Elements applicable to a Unit shall fully comply with all laws, rules and regulations of applicable authorities.

25. Signs. All signs and exterior decorative items must be approved in writing by the Board prior to installation. A Unit Owner may identify the ownership of a Unit with a name plate of a type and size approved by the Association and mounted in a place and manner approved by the Association. The Board shall designate a place and size and other features of any "for sale" or "for rent" sign for any Unit and shall prescribe the location and number of such signs.

26. No Disturbance. No Unit Owner shall make or permit any disturbing noises, odors or activities in the Condominium building, the Common Elements or the Limited Common Elements, or do or permit anything to be done therein, which will interfere with the rights, comforts or conveniences of other Unit Owners or tenants.

27. Construction. No construction or repair work or other installation involving noise shall be conducted in any Unit except on weekdays (not including legal holidays) and only between the hours of 8:00 a.m. and 7:00 p.m., unless such construction or repair work is necessitated by an emergency or otherwise approved by the Board.

28. Misuse of Water Equipment. Toilets, sinks, dishwashers, and other water devices or equipment in the Building shall not be used for any purpose other than those for which they are designed. Any damage resulting from misuse of the same shall be assessed to the Unit Owner of such Unit.

29. Board Access. The Board may retain a pass-key to each Unit. If any lock is altered or a new lock is installed, the Board shall be provided with a key thereto immediately upon such alteration or installation. If the Unit Owner is not personally present to open and permit an entry to his Unit at any time when an entry therein is necessary or permissible under these Regulations or under the By-Laws and has not furnished a key to the Board, then the Board or its agents (but, except in an emergency, only when specifically authorized by an officer of the Condominium) may forcibly enter such Unit without liability for damages or trespass by reason thereof (if during such entry reasonable care is given to such Unit Owner's property).

30. Notice to Board of Security Companies. The Board shall be advised of the company, if any, providing security protection for any Unit but shall not be provided with or be responsible for any pass code for any security system.

31. Dangerous Products. No Unit Owner or any of his agents, servants, employees, licenses or visitors shall at any time bring into or keep in his Unit any flammable, combustible, hazardous or explosive fluid, material, chemical or substance, except for household products as shall be necessary and appropriate for the permitted uses of such Unit provided the same are used according to label instructions and all applicable laws, rules and regulations.

32. Heavy Items. The location, weight and supporting devices for any medical type equipment, safes, waterbeds, pianos and other heavy equipment or items shall in all cases be approved by Landlord prior to initial installation or relocation.

PETS

33. General. All pets must be approved in advance by the Board. Pets shall not be left outside unattended or be permitted to make excessive noise or demonstrate aggressive behavior. The Association shall regulate the number, type and size of pets (specifically including particular breeds of dogs or species of animals deemed to create unreasonable danger); to prohibit the keeping of animals other than customary household pets, which it may define; to designate specific areas where pets may be walked and to prohibit pets in other areas; and to restrict the rights of Owners and/or tenants to keep pets.

34. Leash Required and Waste Disposal. All pets outside any Unit must be kept on a leash. All pet waste shall be disposed of in appropriate sanitation devices.

35. Pets Limited to Unit Owners and Persons with Disabilities. Persons other than Unit Owners may not bring pets upon the Condominium Property except for persons with disabilities or impairments may bring trained animals for the purpose of assisting them with their disability or impairment.

SIDEWALKS, DRIVES AND PARKING AREAS

36. No Obstruction. The sidewalks, driveways, stairways, parking areas and passages of, or appurtenant to, the Condominium building and improvements shall not be obstructed or used for any other purpose than ingress to and egress from the Condominium building and improvements and parking with the designated parking areas.

37. Parking of Vehicles. No bicycles, tricycles, motorcycles, scooters, or other motorized or non-motorized transportation vehicles or devices of any kind or nature shall be left or stored on the Common Elements or Limited Common Elements, except

motorized vehicles can be parked in designated parking areas within the Common Elements.

38. Designated Parking and Risk. There shall be no parking except in designated parking areas. Parking shall be at the full risk of the Unit Owner. Neither the Developer nor the Association is liable for any loss or damage to any vehicle parked on the Property of the Condominium.

39. Approved Vehicles. Unless otherwise authorized by the Association, the parking areas may not be used for any purpose other than parking automobiles, passenger (non-commercial) trucks, motorcycles or other vehicles approved by the Board. No buses, trucks, trailers, boats, recreational or commercial vehicles shall be parked in the parking areas unless the Board has specifically approved the parking and location of the same in writing. All vehicles must have current license plates and be in good operating condition. No vehicles shall be parked with "For Sale" signs attached.

40. Traffic Rules. All Unit Owners shall observe and abide by all parking and traffic regulations as posted by the Association or by municipal authorities. Vehicles parked in violation of any such regulations or these regulations may be towed away at the Unit Owner's sole risk and expense.

41. Limitation on Vehicles. No residential Unit ("B" and "C") shall have more than three (3) vehicles per Unit parked in the designated parking areas during regular business hours of operation and business and commercial unit ("A").

I certify that the above set out Rules and Regulations were adopted by the Maple Place Condominiums Property Owners Association, Inc., acting through its Board of Directors, this the 17th day of May, 2011.

Maple Place Condominiums Property Owners Association, Inc.

By: _____
Name: M. Craig Robertson
Its: Secretary

MINUTES OF A MEETING OF THE ARCHITECTURAL REVIEW BOARD OF THE CITY OF RIDGELAND, MISSISSIPPI

A meeting of the Architectural Review Board of the City of Ridgeland, Mississippi, (the "Board"), was duly called, held, and conducted on Tuesday, July 10, 2018, at 6:00 o'clock P.M. in the Ridgeland City Hall in the City of Ridgeland, Madison County, Mississippi.

The following members were present, to-wit:
Bill Dicken, Chairman
Connie Suber
Lynette Praytor
Tay Morgan
David Dunbar
Robert Moore
Randy Lynn

Members Absent:
Randy Knouse

Also attending:
Jordan Lohman, City Planner

The meeting was called to order by Chairman Dicken. Chairman Dicken led the invocation. It was determined by the members present that there was a quorum.

The first item on the agenda was **SHRIMP BASKET.** The project was presented by **Mr. Jerry Johnson** with **Shrimp Basket**. The project is located at **836 County Line Road.** The applicant is requesting approval of site plan and architectural remodeling of an existing building.

Chairman Dicken opened the floor for a motion. David Dunbar made a motion to approve the site plan and architectural review of the project as submitted as a 'major' agenda item. Connie Suber seconded the motion and a vote was taken thereon as follows:

David Dunbar	Aye
Randy Lynn	Aye
Robert Moore	Aye
Lynette Praytor	Aye
Randy Knouse	Absent
Tay Morgan	Aye
Connie Suber	Aye

Chairman Dicken then declared the motion to approve the site plan and architectural review of the project carried.

The second item on the agenda was **SHELTER INSURANCE.** The project was presented by **Mr. Ryan Hansen** with **WBA Architecture**. The project is located at **595 Steed Road.** The applicant is requesting approval of revised site plan, landscaping, and architectural colors for a previously approved development.

Chairman Dicken opened the floor for a motion. Tay Morgan made a motion to approve the site plan and architectural review of the project as submitted as a 'minor' agenda item. Randy Lynn seconded the motion and a vote was taken thereon as follows:

David Dunbar	Aye
Randy Lynn	Aye
Robert Moore	Aye
Lynette Praytor	Aye
Randy Knouse	Absent
Tay Morgan	Aye
Connie Suber	Aye

Chairman Dicken then declared the motion to approve the site plan and architectural review of the project carried.

The minutes from the June 26, 2018 meeting were then read and approved by the board. There being no further business to come before the board, the meeting was adjourned.

_____
Bill Dicken, Chairman

ATTEST:

_____
Connie Suber, Secretary

SHRIMP BASKET™
Seafood • Po-Boys • Oyster Bar

RIDGELAND, MS

COLOR RENDERING

STOA Architects

SITE PLAN LEGEND

1. EXISTING SITE LIGHTING TO REMAIN. CONCRETE BASES TO BE REPAINTED YELLOW TO MATCH EXISTING. LIGHT POLE AND LIGHT FIXTURE TO BE PAINTED BLACK. WIRING AND LAMPING TO BE REPAIRED/REPLACED AS NEEDED FOR PROPER FUNCTION.
2. EXISTING LANDSCAPING SHRUBS TO REMAIN.
3. EXISTING LANDSCAPING TREES TO REMAIN, TYPICAL.
4. NEW LANDSCAPING AREA WITH SHRUBS TO MATCH EXISTING ON WEST & NORTH ELEVATIONS.
5. NEW RIVER BIRCH TREE ADJACENT TO BUILDING.
6. NEW LANDSCAPING AT EXISTING STREET PROTECTIVE YARD. FINAL LAYOUT OF GROUND COVER, SHRUBS, AND TREES TO MEET CITY OF RIDGELAND LANDSCAPE ORDINANCE.
7. EXISTING PARKING AREA TO REMAIN. CONCRETE TO BE PATCHED/REPAIRED AS NEEDED. ALL PARKING STALLS TO BE RESTRIPED USING WHITE PAINT.
8. EXISTING BRICK TRASH DUMPSTER ENCLOSURE TO REMAIN. BRICK TO BE REPAINTED TO MATCH MAIN FACADE COLOR OF BUILDING. WOODEN GATES TO BE REPLACED/ ADDED TO PROVIDE FULL ENCLOSURE. WOODEN GATES TO BE PAINTED TO MATCH ACCENT COLOR OF BUILDING.
9. EXISTING GROUND MOUNTED SIGN TO REMAIN. POLE COVER AND HOUSING TO BE REPAINTED MATTE BLACK. SIGN FACE TO BE REPLACED.
10. PERFORATED METAL SCREEN TO BE ADDED TO CONCEAL ROOF TOP MOUNTED HVAC UNITS FROM STREET VIEW. SCREEN TO BE PAINTED MATTE BLACK.

SHRIMP BASKET™
Seafood • Po-Boys • Oyster Bar

RIDGELAND, MS

SITE PLAN

STOA Architects

COLOR LEGEND

1. FACADE COLOR TREATMENT
   MANUFACTURER: SHERWIN WILLIAMS
   COLOR: ANTIQUE WHITE
2. TRIM/ACCENT COLOR TREATMENT
   MANUFACTURER: SHERWIN WILLIAMS
   COLOR: PURE WHITE
3. TRIM/ACCENT COLOR TREATMENT
   MANUFACTURER: SHERWIN WILLIAMS
   COLOR: ANALYTICAL GRAY
4. ARCHITECTURAL SHINGLE ROOF
   MANUFACTURER: GAF
   COLOR: CHARCOAL
5. AWNING COLOR TREATMENT
   MANUFACTURER: US AWNINGS
   COLOR: COASTLINE PLUS 2746
   OCEAN BLUE
6. PERFORATED METAL SCREEN TO BE ADDED TO CONCEAL ROOF TOP MOUNTED HVAC UNITS FROM STREET VIEW. SCREEN TO BE PAINTED MATTE BLACK.

SHRIMP BASKET™
Seafood • Po-Boys • Oyster Bar
RIDGELAND, MS

EXTERIOR ELEVATIONS

STOA Architects

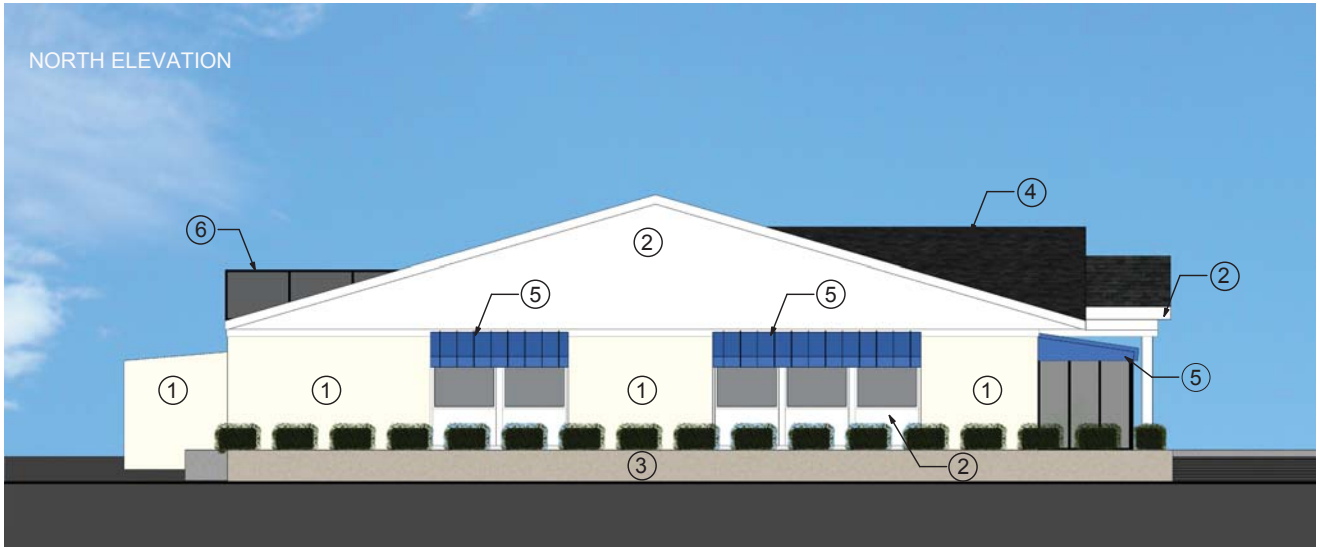

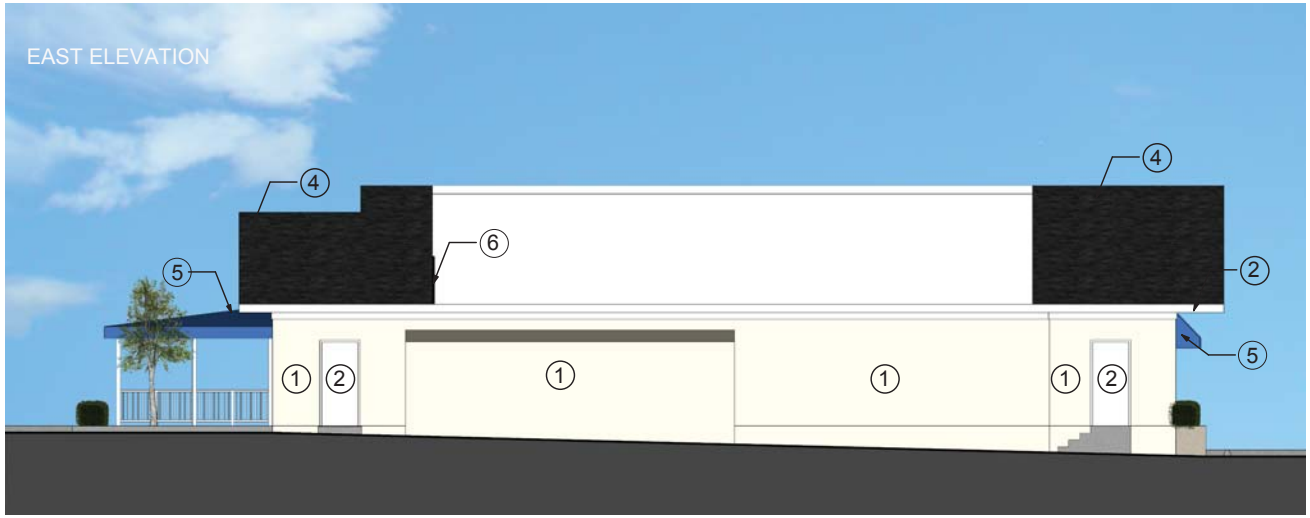

COLOR LEGEND

1. FACADE COLOR TREATMENT
   MANUFACTURER: SHERWIN WILLIAMS
   COLOR: ANTIQUE WHITE
2. TRIM/ACCENT COLOR TREATMENT
   MANUFACTURER: SHERWIN WILLIAMS
   COLOR: PURE WHITE
3. TRIM/ACCENT COLOR TREATMENT
   MANUFACTURER: SHERWIN WILLIAMS
   COLOR: ANALYTICAL GRAY
4. ARCHITECTURAL SHINGLE ROOF
   MANUFACTURER: GAF
   COLOR: CHARCOAL
5. AWNING COLOR TREATMENT
   MANUFACTURER: US AWNINGS
   COLOR: COASTLINE PLUS 2746
   OCEAN BLUE
6. PERFORATED METAL SCREEN TO BE ADDED TO CONCEAL ROOF TOP MOUNTED HVAC UNITS FROM STREET VIEW. SCREEN TO BE PAINTED MATTE BLACK.

SHRIMP BASKET™
Seafood • Po-Boys • Oyster Bar

RIDGELAND, MS

EXTERIOR ELEVATIONS

STOA Architects

-MANUFACTURER: Sherwin Williams
FACADE COLOR TREATMENT:
SW 6119 Antique White

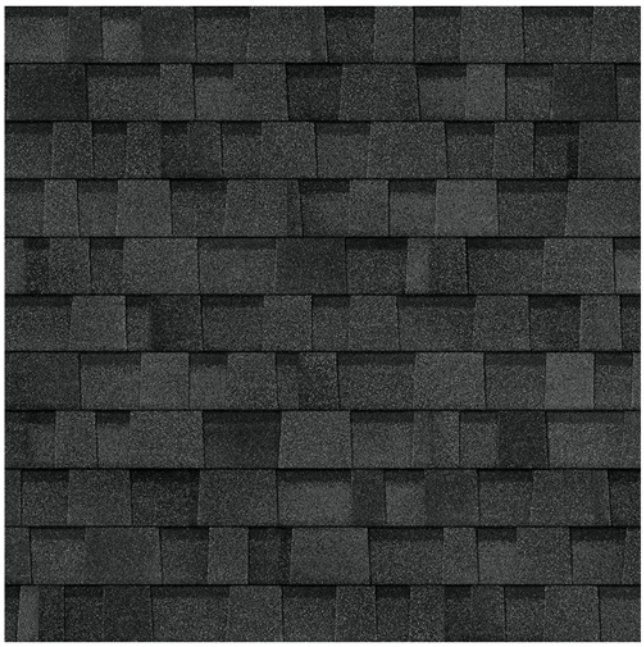

-PRODUCT: Architectural Roof Shingles
MANUFACTURER: GAF
ROOF COLOR TREATMENT: Charcoal

-MANUFACTURER: Sherwin Williams
ACCENT COLOR TREATMENT:
SW7005 Pure White

-MANUFACTURER: Sherwin Williams
TRIM/ACCENT COLOR TREATMENT:
SW 7051 Analytical Grey

-PRODUCT: Awning
MANUFACTURER: US Awnings
AWNING COLOR TREATMENT: Coastline Plus
2746 Ocean Blue (TRADE DRESSING)

SHRIMP BASKET™
Seafood • Po-Boys • Oyster Bar

Shrimp Basket, Ridgeland, MS

EXTERIOR FINISHES

STOA Architects

the city of RIDGELAND

fire department

July 9, 2018

MEMORANDUM

TO: Mayor and Board of Aldermen

FROM: Matt Bailey, Fire Chief

SUBJECT: Surplus Equipment

I am requesting the following items be declared surplus and removed from our inventory:

Asset #	Description	Serial Number	Recommended Disposition
160-1-33	2003 Dodge Durango	104HR38N23F546247	Sell
160-1-43	2007 Chevrolet Impala	2G1WB58K279284117	Sell
160-6-385	Tempest 21" Positive Pressure Fan	2901725	Dispose
160-6-564	Samsung 19" TV/VCR Combo	3CACR06017	Disposed Of - Affidavit
160-6-598	Whelen Light Bar	N/A	Dispose
160-6-599	Motorola Radius GM300 Mobile Radio	159TUY8249	Sell
160-6-796	3M Opticom Emitter	20715	Dispose
160-6-796A	3M Opticom Switch	15370AG	Dispose
160-6-806	Mask Fit Tester	45191	Trade-In
160-6-874	Emerson 20" TV/DVD Combo	J1423074	Disposed Of – Affidavit
160-6-876	Manitowoc Ice Machine	040452139	Sell
160-6-947	Motorola Model II Portable Radio	721CFZ5076	Lost – Affidavit
160-6-958	Motorola Model II Portable Radio	721CFZ5073	Lost - Affidavit
160-6-976	Motorola XTL 2500 Mobile Radio	514CFZ0631	Sell
160-6-977	Motorola XTL 2500 Mobile Radio	514CFZ0621	Sell
160-6-1076	Samsung 40" TV	B5BD3CESA48314R	Dispose
160-6-1126	Wet/Dry Vacuum	N/A	Dispose
160-6-1154	Maytag 3.6 cf Topload Washer	C24830018	Sell
160-6-1243	Whirlpool Gas Dryer	M31103432	Sell
160-6-1252	Kobalt Air Compressor	6-01252	Dispose

Your consideration and approval of this request will be appreciated.

mailing address: p.o. box 361 • ridgeland, ms 39158
street address: 456 towne center boulevard • ridgeland, ms 39157
ph: 601.856.8405 • www.ridgelandms.org

Gene F. McGee, cmo - mayor • Matthew Bailey – fire chief

board of aldermen: D.I. Smith, cmo - at-large • Ken Heard, cmo - ward 1 • Chuck Gautier, cmo - ward 2
Kevin Holder, cmo, mayor pro tempore - ward 3 • Brian P. Ramsey, cmo - ward 4 • Bill Lee - ward 5 • Wesley Hamlin, cmo - ward 6

the city of RIDGELAND

public works

Memorandum

To: Mayor and Board of Alderman

From: Mike McCollum, Public Works Director

Date: July 11, 2018

Re: Renew Truck Route Approval for Hemphill Construction to Use Round-a-Bout Off Ramp to I-55

We recommend that the Mayor and Board of Alderman approve the enclosed truck route for Hemphill Construction to utilize the off ramp on the Highland Colony Round-a-Bout to Highland Colony Parkway. Their current permit expires on July 31, 2018 and will need this approval to continue to use the current route.

Thank you for your consideration of our request. Please contact me if you have any questions.

mailing address: p.o. box 217 · ridgeland, ms 39158
street address: 304 highway 51 · ridgeland, ms 39157
ph: 601.853.2027 · fax: 601.853.2019 · www.ridgelandms.org

Gene F. McGee, cmo - mayor · John M. McCollum - director of public works

board of aldermen: D.I. Smith, cmo - at-large • Ken Heard, cmo - ward 1 • Chuck Gautier, cmo - ward 2
Kevin Holder, cmo, mayor pro tempore - ward 3 • Brian P. Ramsey, cmo - ward 4 • Bill Lee - ward 5 • Wesley Hamlin, cmo - ward 6

City of Ridgeland

1.	Destination (Physical Address)	800 Highland Colony Pkwy			
2.	Building Permit #	01162			
3.	Number and Type of Trucks		19,135.00	Trucks @	Trailer and Tandem Axle
4. & 5.	Purpose of Loads	Number of estimate loads			
	Mobilization		50.00	±	
	RCP and Drainage		50.00	±	
	Sanitary and Water Distribution		70.00	±	
	Earthwork		17,000.00	±	
	Concrete		350.00	±	
	610 Base		800.00	±	
	Rip Rap		15.00	±	
	Asphalt		550.00	±	
	Lime		50.00	±	
	Misc. Material		200.00	±	
			19,135.00	±	
6.	Gross Vehicle Weight Rating and Classification	55,000 to 80,000 lbs.			
7.	Trucking Company	Hemphill Construction Company		Phone #	601-932-2060
8.	Trucking Company Address	1858 HWY 49 South, Florence, MS 39073			
9.	Start Point(Physical Address)	1858 HWY 49 South, Florence, MS 39073			
10.	Start Time		6/15/2017		
11.	Expiration Date		7/31/2019		

12. Approved Truck Route

See attached plan route along Highland Colony. Access from I-220 to West County Line Road North along Highland Colony to the project site. Empty loads / Excess material will progress to the North along Highland Colony to the free right of the round-a-bout to the East to I-55. No hauling from the North through the rood-a-bout will be allowed.

Gene F. McGee
Mayor
City of Ridgeland

_____

Date _____

BUILDING PERMIT

NO. 01162

LOT NO.

800

INSPECTIONS

	APPROVED	REJECTED	DATE	REINSPECTED/ DATE
TEMPORARY ELECTRICAL				
ROUGH PLUMBING				
FOUNDATION				
SEWER TIE ON				
FRAMING & ELECTRICAL				
INSULATION				
GAS				
ELECTRICAL FOR POWER				
FINAL				
FEMA DESIGNATION				

Site Work Only

THE CITY OF RIDGELAND

COMMUNITY DEVELOPMENT

856-3877

RSS 601-856-5

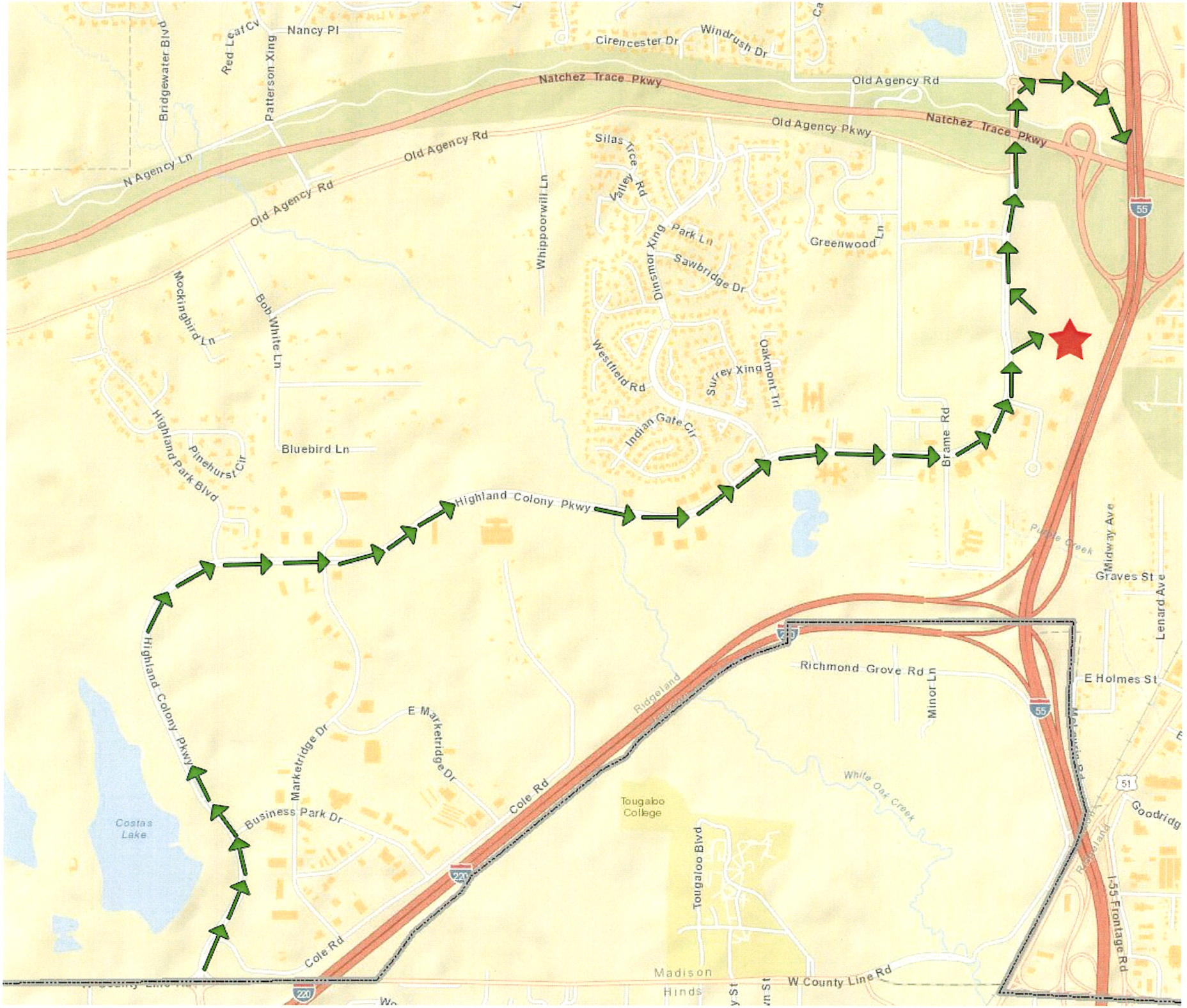
Nancy Pl
Red Leaf Cv
Bridgewater Blvd
Patterson Xing
Cirencester Dr
Windrush Dr
Natchez Trace Pkwy
Old Agency Rd
Old Agency Pkwy
N Agency Ln
Silas Trce Rd
Valley Rd
Whippoorwill Ln
Dinsmor Xing
Park Ln
Sawbridge Dr
Greenwood Ln
Mockingbird Ln
Bob White Ln
Westfield Rd
Surrey Xing
Oakmont Trl
Indian Gate Cir
Highland Park Blvd
Pinehurst Cir
Bluebird Ln
Highland Colony Pkwy
Brame Rd
Midway Ave
Graves St
Lenard Ave
Richmond Grove Rd
Minor Ln
E Holmes St
Ridgeland
Marketridge Dr
E Marketridge Dr
Business Park Dr
Cole Rd
Tougaloo College
White Oak Creek
Costas Lake
Tougaloo Blvd
I-55 Frontage Rd
Madison
Hinds
W County Line Rd
55
220
51

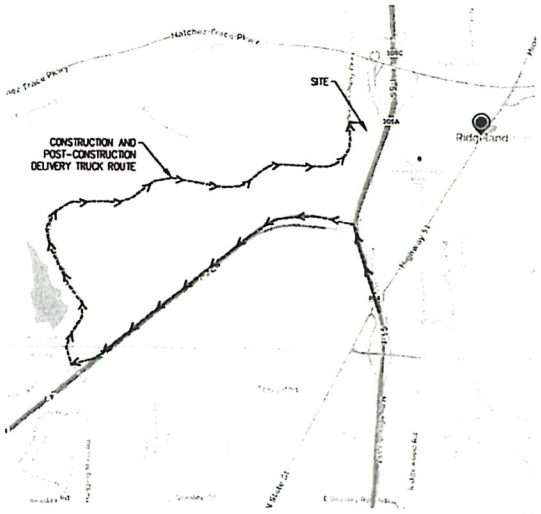

LOCATION MAP (N.T.S.)

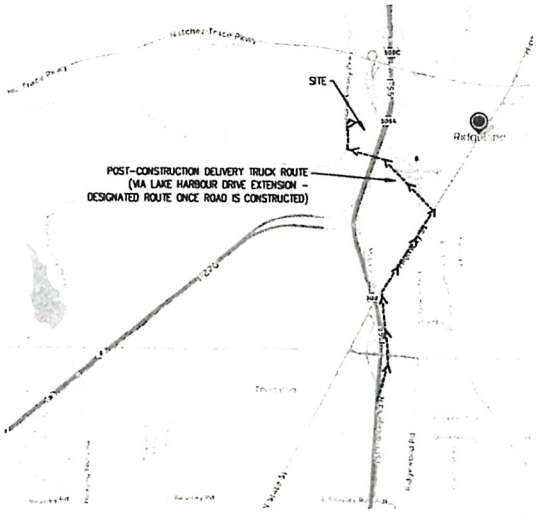

LOCATION MAP (N.T.S.)

NO CONSTRUCTION EQUIPMENT IS ALLOWED BEYOND THE WORK ZONE BARRICADES. FAILURE TO COMPLY WILL RESULT IN POLICE DEPARTMENT ACTION AND/OR FINES

COSTCO WHOLESALE

Ridgeland, MS

CITY OF RIDGELAND
MADISON COUNTY

COSTCO WHOLESALE CORPORATION

999 LAKE DRIVE
ISSAQUAH, WA 98027
T: 425.313.8100
www.costco.com

ENGINEER:

AEC

Civil Engineering
Land Planning
Landscape Architecture
Water Resources
Property Services
Arbor & Services

50 Warm Springs Circle
Roswell • Georgia • 30075
(770)641-1942 • www.aecltd.com

ENGINEERS SEAL

CONSTRUCTION AND DELIVERY ROUTE PLAN

Δ	DATE	DESCRIPTION
	06/24/16	REVISED PER CITY COMMENTS
	06/10/16	REVISED PER CITY COMMENTS
	05/11/16	ISSUE FOR BID
	03/18/16	LANDSCAPE RESUBMIT

SHEET NUMBER

C10.0

the city of RIDGELAND

police department

July 11, 2018

TO: Mayor & Board of Aldermen

FROM: Eric Redd, Assistant Chief of Police

SUBJECT: Special Event – Canopy Children's Solutions (5K 4Kids Canopy Care Run)

I have attached a request for a Special Event Permit from Traci Grubb with Canopy Children's Solution. This event is the "5K 4Kids Canopy Care Run" scheduled Saturday, September 22, 2018 from 7:00 a.m. until 11:00 a.m. at Colonial Heights Baptist Church located at 444 Northpark Drive. Course route is attached for your review.

Ms. Grubb is expecting a crowd of approximately 250 and will have portable restrooms on site to accommodate participants. Trash cans will be placed along race route. Volunteers will be responsible for set-up and clean-up upon conclusion of the event.

This event will generate overtime for the police department and there will be eight (8) posts that need to be manned for approximately 2.5 hours each for participant safety. At $27.00 per hour, the estimated overtime cost will be $540.00. Reserve officers will be utilized if available.

Checks in the amount of $100.00 and $1,000.00 representing requisite filing fee and bond money are attached along with the application for Permit to Play On-Premises Music.

Your consideration and approval will be greatly appreciated.

CC: Lt. Tony Willridge

Attachments (1)

115 west school street · ridgeland, ms 39157
ph: 601.856.2121 · www.ridgelandms.org

Gene F. McGee, cmo - mayor · John R. Neal - chief of police
board of aldermen: D.I. Smith, cmo - at-large · Ken Heard, cmo - ward 1 · Chuck Gautier, cmo - ward 2
Kevin Holder, cmo, mayor pro tempore - ward 3 · Brian P. Ramsey, cmo - ward 4 · Bill Lee - ward 5 · Wesley Hamlin, cmo - ward 6

the city of RIDGELAND

CITY OF RIDGELAND
SPECIAL EVENT PERMIT APPLICATION

(Please allow minimum 30 days for approval)

EVENT NAME: 5K4Kids Canopy Care Run

EVENT LOCATION: Colonial Heights Baptist Church 444 Northpark Dr. Ridgeland MS 39157

EVENT DATE: Beginning Sept 22 to Ending Sept 22 Multiple Days: ☐ YES ☒ NO

EVENT HOURS: Beginning 7am to Ending 11am

TYPE OF EVENT: 5K Race

EVENT POINT OF CONTACT: Trai Grubb CELL NUMBER: 601-201-0861
(This person must remain on scene during the entire event)

NAME OF ORGANIZATION: Canopy Children's Solutions

ADDRESS: 1465 Lakeland Dr. CITY/STATE/ZIP: Jackson MS 39216

ESTIMATED CROWD SIZE: 250 NUMBER OF EVENT PERSONNEL:

ARRANGEMENTS FOR RESTROOM FACILITIES: ☒ YES ☐ NO LOCATION: Parking lot - McGraw Rentals

ARRANGEMENTS FOR SITE CLEAN-UP: ☒ YES ☐ NO DETAILS: Volunteers and trash cans along Race Route.

RECYCLING PROGRAM FOR WASTE: ☐ YES ☒ NO DETAILS:

The City of Ridgeland will assist organizers in planning and locating recycle bins for recyclable waste through local companies. Event organizers are encouraged to maintain the City of Ridgeland's vision of a green environment by having your event recycle its waste.

Will the organizers of this event use the services of an UAS (unmanned aircraft system): ☐ YES ☒ NO
If Yes, who is the operator of the system: Cell Number:
If an UAS/Drone will be utilized, a copy of the following required documents must be attached to this application:

- Section 333 Exemption or Aircraft Certification
- Certificate of Authorization (COA)
- Aircraft Registration and Markings
- Pilot Certificate

FIRST AID/MEDICAL STATION(s): ☒ YES ☐ NO LOCATION(s): Finish/Start line

POLICE/SECURITY PERSONNEL REQUIRED: ☐ Police Dept. Assigned ☐ Self-Hired ☐ Not Applicable

ASSISTANCE FROM OTHER CITY DEPARTMENTS: ☐ Fire Department ☐ Public Works/Streets ☐ Recreation/Parks

Applicant Printed Name: Trai Grubb Contact Number: 769-777-1021

Applicant Signature: Trai Grubb Date: 6/1/2018

Application Instructions

1). You must present to the Chief of Police or his designee your plan for parking and traffic control. You must state in this plan whether or not police or private security personnel will be needed to direct and handle traffic and parking.

2). City of Ridgeland Special Events Ordinance section 10-33(2) requires adequate security be provided at special events. This requirement is one security officer for every 400 people in attendance. A private security company may be used but preference shall be given to the hiring of off duty personnel. The assistance from Ridgeland Police Department for road course races/walks to secure intersections shall not be considered as part of the security requirement. The personnel assigned for traffic control are in addition to any requirement for on site security personnel required in the ordinance.

3). If the event is to have outdoor music, a Permit to Play on Premises Music will be required from the applicant agreeing to comply with the noise ordinance of the City of Ridgeland, MS.

4). If there is a need for Police Dept., Fire Dept., Public Works Dept. and/or Rec/Parks Dept. personnel to work in controlling the special event, the applicant will agree to pay this cost from the filing of a bond fee.

5). The applicant may be required to post a bond fee in the minimum amount of one thousand dollars ($1,000.00) with the City Clerk. This is to ensure that the event area is immediately cleaned up after its conclusion, and any City employee who works overtime as a result of the special event, will be compensated from the bond proceeds.

6). Submit the above application and information to the Office of the Chief of Police with a non-refundable filing fee of one hundred dollars ($100.00) along with the above referenced bond fee. This application will be forwarded to the Patrol Division Commander or a designee who will review the application for all required documentation. This application and documentation will be presented to the Ridgeland Board of Aldermen for subsequent approval. **Please allow a minimum of 30 days to complete the process and receive approval.**

7). Event organizers should submit a map outlining the area where an event is to be held. Points of interest (entrance/exit points, first aid stations, etc…) shall be included on this map. If the event is a road race/walk, a map reflecting the proposed course route along with a description of the route shall be included. If any portion of the route will include sections of the Natchez Trace Parkway, you must first obtain approval from the Natchez Trace Chief (phone no. 662-680-4014; Ridgeland office 601-856-7321) and documentation reflecting this approval must be submitted with this application.

8). If the event is to be held at Old Trace Park and/or Madison Landing, you must first seek approval from PRVWSD Parks and Recreation (601-856-6319) and obtain a Facility Use Application which must be submitted with this application.

9). The number of event personnel will represent the number of people from the organization who will be assisting with the overall operation of the event. This will include any volunteers from the organization.

10). The arrangements for restroom facilities as addressed in the Ridgeland Code of Ordinances indicate 1 restroom per 150 people in attendance. These may be portable restrooms or existing restroom structures.

11). The event organizer or organization will be responsible for clean-up at the conclusion of the event. The City of Ridgeland encourages organizations to participate in a recycle program for any waste or debris to be discarded.

12). The first aid station located on the event site shall be manned by a state certified EMT.

13). The number of police/security personnel shall be determined by the expected crowd size. The event organizer may staff the event to satisfy this requirement through off-duty law enforcement personnel. The Ridgeland Police Department will assist the organizers if they choose the police department assigned option, or the event organizers may choose the self-hire option to select their own personnel to comply with the ordinance.

For Police Department Use Only

This application was received by the Ridgeland Police Department on 6/27/18 and has been reviewed by the appropriate personnel. This application has been APPROVED / DENIED by the Chief of Police or Designee. If approved by Ridgeland PD, this application will be submitted for consideration at the Ridgeland Mayor and Board of Alderman meeting to be held on 7-17-18.

Chief of Police or Designee: [signature] DATE: 7/11/18

Number of Overtime Officers: 8 Estimated OT Cost: $540.00

Additional Overtime Cost for City Departments: FIRE Ø P/W Ø REC/PARKS Ø

the city of RIDGELAND

CITY OF RIDGELAND
APPLICATION FOR
PERMIT TO PLAY ON PREMISES MUSIC

(Please allow minimum 30 days for approval)

DATE OF APPLICATION: 6/1/2018

EVENT NAME: 5K4Kids Canopy Cures Run

EVENT LOCATION: Colonial Heights Baptist Church 444 Northpark Dr. Ridgeland MS 39157

DESCRIPTION OF ON-PREMISES ACTIVITY: Music for Warm-up and after race kid zone activities

DATE OF ACTIVITY: Beginning 9/22/2018 to Ending 9/22/2018

HOURS OF ACTIVITY: Beginning 7:00 am to Ending 10:30 am

ACTIVITY POINT OF CONTACT: Traci Gibbs CELL NUMBER: 601-201-0861
(This person must remain on scene during the entire event)

NAME OF ORGANIZATION: Canopy Children's Solutions

ADDRESS: 1465 Lakeland Dr. CITY/STATE/ZIP: Jackson MS 39216

MAXIMUM NOISE LEVEL (In Decibels) TO BE EMITTED AT NEAREST PREMISES BOUNDARY: _____

PROVIDE FACTS THAT WOULD SHOW THE ACTIVITY FOR WHICH THE PERMIT IS REQUESTED WOULD NOT DISTURB THE PEACE OF ANY FAMILY OR PERSON WITHIN THE AREA INTO WHICH SOUND SHALL CARRY: The music will be in the parking lot of the church and will only be loud enough for participants to hear

THE CHIEF OF POLICE SHALL HAVE THE AUTHORITY TO REVOKE ANY PERMIT ISSUED.

Applicants Signature: Traci Gibbs Date: 6/1/2018

☒ APPROVED
☐ DENIED

Chief of Police or Designee:: [signature]

Date: 7/11/18

In the event a permit is denied, the applicant may appeal the decision to the Mayor and Board of Aldermen. Any such appeal shall be taken not more than ten (10) days from the denial of a permit by giving written notice of the appeal to the Ridgeland City Clerk.

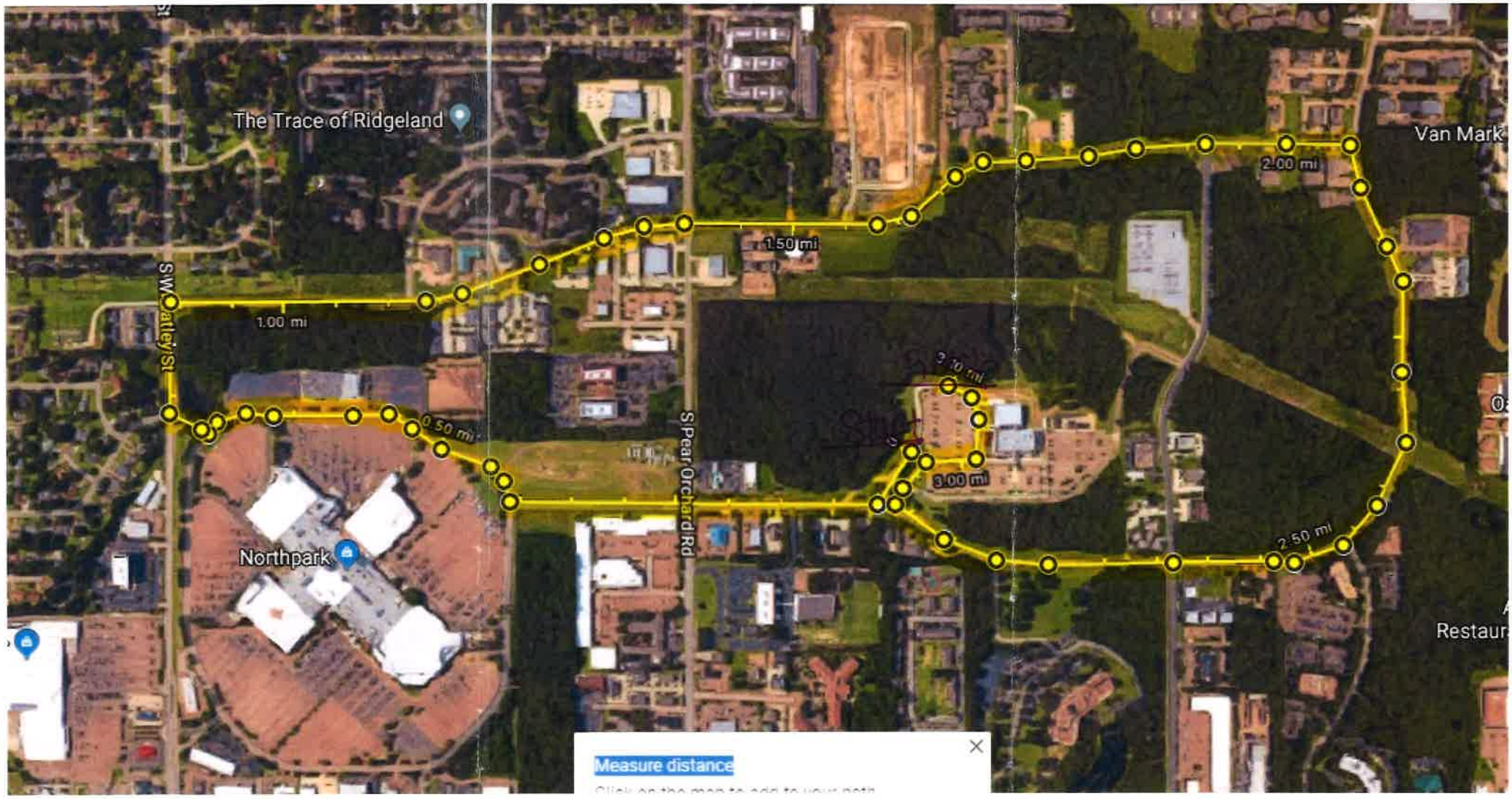
The Trace of Ridgeland
Van Mark
S W Atley St
S Pear Orchard Rd
Northpark
1.00 mi
1.50 mi
2.00 mi
2.50 mi
3.00 mi
0.50 mi
Measure distance

POST ASSIGNMENT
AUTISM AWARENESS 5K AND COMMUMITY EVENT
Saturday September 22, 2018
0700-1100 hours

Officer	Badge No.	Patrol Car	Post Assignment	Post #
J. Finnegan	136	MC/PC	Command	Rover/Lead
C. Lewis	148	PC	North Park Drive/Colonial Heights Church	1
M. Witt	155	PC	North Park Drive/ Pear Orchard Road	2
G. Fillingane	82	TBA	S. Wheatley Street/ McCormack Drive	3
M. Tate	166	PC	Towne Center Blvd./ S. Wheatley Street	4
C. Campbell	164	PC	Towne Center Blvd./ Arbor Drive	5
C. Littleton	174	PC	Towne Center Blvd./ Pear Orchard Rd.	6
G. Waters	142	PC	North Park Drive/ Towne Center Blvd.	7

There will be a roll call briefing at **0600** hours with officers on post no later than **0645** hours. Officers are to utilize **TAC-1** channel for the event and wear special detail uniform along with traffic safety vest.

Traci Grubb - 601-201-0861 point of contact event coordinator

Post 1

Officer will hold traffic at the beginning of race to ensure that participants can exit the church parking lot onto North Park Drive as well as their return back into the parking lot at the end.

Post 2

Officer will work traffic so that the participants may cross Pear Orchard Road towards North Park Mall.

Post 3

Officer will work traffic so that participants may turn right onto S. Wheatley Street.

Post 4

Officer will work traffic so that participants may turn right onto Towne Center Blvd.

Post 5

Officer will work traffic so that participants have right of way through the intersection.

Post 6

Officer will work traffic to ensure participants have right of way through the intersection as they make their way east.

Post 7

Officer will work traffic as the participants cross the intersection to ensure right of way onto North Park Drive.

MISSISSIPPI CHILDREN'S HOME SOCIETY DBA CANOPY CHILDREN'S SOLUTIONS • JACKSON, MISS. • (601) 352-7784

047310

Payee City of Ridgeland
Vendor ID City of Ridgeland Account #:

47310
6/22/2018

Invoice	Description	Amount
2011_28296	Filing fee for 5k4kids Run	100.00
2011_28297	Bond fee for 5k4kids race	1,000.00
	Total : 0.00	1,100.00

THE KEY TO DOCUMENT SECURITY • HEAT ACTIVATED THUMB PRINT • ADDITIONAL SECURITY FEATURES INCLUDED • SEE BACK FOR DETAILS

CANOPY
Children's Solutions

REGIONS BANK
JACKSON, MISSISSIPPI 39205

85-543/653

047310

Mississippi Children's Home Society dba Canopy Children's Solutions
P.O. Box 1078, Jackson, Mississippi 39215

****One Thousand One Hundred and 00/100 Dollars

DATE 6/22/2018

AMOUNT 1,100.00

PAY TO THE ORDER OF
City of Ridgeland
304 Hwy 51
Ridgeland, MS 39157

⑈047310⑈ ⑆065305436⑆ ⑈500⑈ 2027563⑈

the city of RIDGELAND

police department

July 11, 2018

TO: Mayor & Board of Aldermen

FROM: Eric Redd, Assistant Chief of Police

SUBJECT: Special Event –Trunk or Treat

I have attached a request for a Special Event Permit from Wendy Bourdin with the City of Ridgeland Parks and Recreation Department. This event is the annual Trunk or Treat scheduled Thursday, October 25, 2018 at Freedom Ridge Park from 6:00 p.m. to 8:00 p.m. This event is open to children ages 0 – 12 and there is a $5.00 admission fee.

Ms. Bourdin is expecting a crowd of approximately 1,000 and the facilities at the park will be open to accommodate participants. Ridgeland Parks and Recreation staff will be responsible for clean-up upon conclusion of the event and recycle bins will be placed at the park.

This event will not generate overtime for the police department. Ridgeland PD will have a COP unit, beat officer and motor unit adjust their schedule to be present in the park during this event. Ms. Bourdin has requested the $100.00 filing fee and $1,000.00 bond money be waived.

Your consideration and approval will be greatly appreciated.

CC: Lt. Tony Willridge

Attachments (1)

115 west school street · ridgeland, ms 39157
ph: 601.856.2121 · www.ridgelandms.org

Gene F. McGee, cmo - mayor · John R. Neal - chief of police
board of aldermen: D.I. Smith, cmo - at-large · Ken Heard, cmo - ward 1 · Chuck Gautier, cmo - ward 2
Kevin Holder, cmo, mayor pro tempore - ward 3 · Brian P. Ramsey, cmo - ward 4 · Bill Lee - ward 5 · Wesley Hamlin, cmo - ward 6

the city of RIDGELAND

CITY OF RIDGELAND
SPECIAL EVENT PERMIT APPLICATION

(Please allow minimum 30 days for approval)

EVENT NAME: Trunk or Treat

EVENT LOCATION: Freedom Ridge Park

EVENT DATE: Beginning October 25, 2018 to Ending October 25, 2018 Multiple Days: ☐ YES ☒ NO

EVENT HOURS: Beginning 6:00 pm to Ending 8:00 pm

TYPE OF EVENT: Halloween - Trick or Treating

EVENT POINT OF CONTACT: Wendy Bourdin CELL NUMBER: 601-573-0559
(This person must remain on scene during the entire event)

NAME OF ORGANIZATION: City of Ridgeland Recreation + Parks

ADDRESS: PO Box CITY/STATE/ZIP: 217

ESTIMATED CROWD SIZE: 1,000 NUMBER OF EVENT PERSONNEL: 10-20

ARRANGEMENTS FOR RESTROOM FACILITIES: ☒ YES ☐ NO LOCATION: Freedom Ridge

ARRANGEMENTS FOR SITE CLEAN-UP: ☒ YES ☐ NO DETAILS: Recreation + Parks staff will clean up

RECYCLING PROGRAM FOR WASTE: ☒ YES ☐ NO DETAILS: Recycle bins will be placed throughout the event site

The City of Ridgeland will assist organizers in planning and locating recycle bins for recyclable waste through local companies. Event organizers are encouraged to maintain the City of Ridgeland's vision of a green environment by having your event recycle its waste.

Will the organizers of this event use the services of an UAS (unmanned aircraft system): ☐ YES ☒ NO
If Yes, who is the operator of the system:_____ Cell Number:_____
If an UAS/Drone will be utilized, a copy of the following required documents must be attached to this application:

- Section 333 Exemption or Aircraft Certification
- Certificate of Authorization (COA)
- Aircraft Registration and Markings
- Pilot Certificate

FIRST AID/MEDICAL STATION(s): ☒ YES ☐ NO LOCATION(s):_____

POLICE/SECURITY PERSONNEL REQUIRED: yes ☒ Police Dept. Assigned ☐ Self-Hired ☐ Not Applicable

ASSISTANCE FROM OTHER CITY DEPARTMENTS: ☒ Fire Department ☐ Public Works/Streets ☐ Recreation/Parks

Applicant Printed Name: Wendy Bourdin Contact Number: 601-853-2011

Applicant Signature: Wendy Bourdin Date: 1-11-2018

Application Instructions

1). You must present to the Chief of Police or his designee your plan for parking and traffic control. You must state in this plan whether or not police or private security personnel will be needed to direct and handle traffic and parking.

2). City of Ridgeland Special Events Ordinance section 10-33(2) requires adequate security be provided at special events. This requirement is one security officer for every 400 people in attendance. A private security company may be used but preference shall be given to the hiring of off duty personnel. The assistance from Ridgeland Police Department for road course races/walks to secure intersections shall not be considered as part of the security requirement. The personnel assigned for traffic control are in addition to any requirement for on site security personnel required in the ordinance.

3). If the event is to have outdoor music, a Permit to Play on Premises Music will be required from the applicant agreeing to comply with the noise ordinance of the City of Ridgeland, MS.

4). If there is a need for Police Department and/or Public Works Department personnel to work in controlling the special event, the applicant will agree to pay this cost from the filing of a bond fee.

5). The applicant may be required to post a bond fee in the minimum amount of one thousand dollars ($1,000.00) with the City Clerk. This is to ensure that the event area is immediately cleaned up after its conclusion, and any City employee who works overtime as a result of the special event, will be compensated from the bond proceeds.

6). Submit the above application and information to the Office of the Chief of Police with a non-refundable filing fee of one hundred dollars ($100.00) along with the above referenced bond fee. This application will be forwarded to the Patrol Division Commander or a designee who will review the application for all required documentation. This application and documetation will be presented to the Ridgeland Board of Aldermen for subsequent approval. **Please allow a minimum of 3 weeks to complete the process and receive approval.**

7). Event organizers should submit a map outlining the area where an event is to be held. Points of interest (entrance/exit points, first aid stations, etc...) shall be included on this map. If the event is a road race/walk, a map reflecting the proposed course route along with a description of the route shall be included. If any portion of the route will include sections of the Natchez Trace Parkway, you must first obtain approval from the Natchez Trace Chief (phone no. 662-680-4014; Ridgeland office 601-856-7321) and documentation reflecting this approval must be submitted with this application.

8). If the event is to be held at Old Trace Park and/or Madison Landing, you must first seek approval from PRVWSD Parks and Recreation (601-856-6319) and obtain a Facility Use Application which must be submitted with this application.

9). The number of event personnel will represent the number of people from the organization who will be assisting with the overall operation of the event. This will include any volunteers from the organization.

10). The arrangements for restroom facilities as addressed in the Ridgeland Code of Ordinances indicate 1 restroom per 150 people in attendance. These may be portable restrooms or existing restroom structures.

11). The event organizer or organization will be responsible for clean-up at the conclusion of the event. The City of Ridgeland encourages organizations to participate in a recycle program for any waste or debris to be discarded.

12). The first aid station located on the event site shall be manned by a state certified EMT.

13). The number of police/security personnel shall be determined by the expected crowd size. The event organizer may staff the event to satisfy this requirement through off-duty law enforcement personnel. The Ridgeland Police Department will assist the organizers if they choose the police department assigned option, or the event organizers may choose the self-hire option to select their own personnel to comply with the ordinance.

For Police Department Use Only

This application was received by the Ridgeland Police Department on 3/30/18 and has been reviewed by the appropriate personnel. This application has been APPROVED / DENIED by the Chief of Police or Designee. If approved by Ridgeland PD, this application will be submitted for consideration at the Ridgeland Mayor and Board of Alderman meeting to be held on 7-17-18.

Chief of Police or Designee: [signature] DATE: 7/11/18

Number of Overtime Officers: Ø Estimated OT Cost: Ø

the city of RIDGELAND

CITY OF RIDGELAND
APPLICATION FOR
PERMIT TO PLAY ON PREMISES MUSIC

(Please allow minimum 30 days for approval)

POLICE RIDGELAND

DATE OF APPLICATION: 1-11-2018

EVENT NAME: Trunk or Treat

EVENT LOCATION: Freedom Ridge Park

DESCRIPTION OF ON-PREMISES ACTIVITY: Halloween - Trick or Treating

DATE OF ACTIVITY: Beginning October 25 to Ending October 25

HOURS OF ACTIVITY: Beginning 6:00 pm to Ending 8:00 pm

ACTIVITY POINT OF CONTACT: Wendy Bourdin CELL NUMBER: 601-573-0559
(This person must remain on scene during the entire event)

NAME OF ORGANIZATION: City of Ridgeland Recreation & Parks

ADDRESS: PO Box 217 CITY/STATE/ZIP: Ridgeland, MS 39158

MAXIMUM NOISE LEVEL (In Decibels) TO BE EMITTED AT NEAREST PREMISES BOUNDARY: 50

PROVIDE FACTS THAT WOULD SHOW THE ACTIVITY FOR WHICH THE PERMIT IS REQUESTED WOULD NOT DISTURB THE PEACE OF ANY FAMILY OR PERSON WITHIN THE AREA INTO WHICH SOUND SHALL CARRY: used as background music and to make announcements

THE CHIEF OF POLICE SHALL HAVE THE AUTHORITY TO REVOKE ANY PERMIT ISSUED.

Applicants Signature: Wendy Bourdin Date: 1-11-2018

☒ APPROVED
☐ DENIED

Chief of Police or Designee:: [signature]
Date: 7/11/18

In the event a permit is denied, the applicant may appeal the decision to the Mayor and Board of Aldermen. Any such appeal shall be taken not more than ten (10) days from the denial of a permit by giving written notice of the appeal to the Ridgeland City Clerk.

the city of RIDGELAND

police department

July 11, 2018

TO: Mayor & Board of Aldermen

FROM: Eric Redd, Assistant Chief of Police ER

SUBJECT: Special Event Permit – SAWA (Labor of Love 10K/5K)

I have attached a Special Event Permit request from Laurie Hollingsworth with the Salvation Army Women's Auxiliary (SAWA). This event is the Labor of Love 10K and 5K Run/Walk fundraiser scheduled Monday, September 3, 2018 from 6:30 a.m. to 10:300 a.m. to be held at 1052 Highland Colony Parkway (Harper, Rains, Knight & Co.). Race routes are attached for your review.

Ms. Hollingsworth is expecting a crowd of approximately 250 – 300 participants and arrangements have been made to have portable restrooms on site. Salvation Army members and volunteers will set-up and clean-up upon conclusion of the event.

This event will generate overtime for the police department as there will be nine (9) posts that need to be manned for approximately 3 hours each for participant safety. At a rate of $27.00 per hour, the estimated overtime cost will be $729.00.

Included are checks in the amount of $100.00 and $1,000.00, representing the requisite filing fee and bond money along with the application for Permit to Play On-Premises Music.

Your consideration and approval will be greatly appreciated.

CC: Lt. Tony Willridge

Attachment (1)

115 west school street • ridgeland, ms 39157
ph: 601.856.2121 • www.ridgelandms.org

Gene F. McGee, cmo - mayor • John R. Neal - chief of police
board of aldermen: D.I. Smith, cmo - at-large • Ken Heard, cmo - ward 1 • Chuck Gautier, cmo - ward 2
Kevin Holder, cmo, mayor pro tempore - ward 3 • Brian P. Ramsey, cmo - ward 4 • Bill Lee - ward 5 • Wesley Hamlin, cmo - ward 6

the city of RIDGELAND

CITY OF RIDGELAND
SPECIAL EVENT PERMIT APPLICATION
(Please allow minimum 30 days for approval)

EVENT NAME: Labor of Love 10K + 5K Walk/Run

EVENT LOCATION: 1052 Highland Colony Parkway, Ridgeland, MS 39157

EVENT DATE: Beginning 9/3/18 to Ending 9/3/18 Multiple Days: ☐ YES ☒ NO

EVENT HOURS: Beginning 6:30 AM to Ending 10:30 AM

TYPE OF EVENT: Run Walk Race Fundraiser for the Salvation Army to support Women + Children for temporary assistance.

EVENT POINT OF CONTACT: Becky Cade CELL NUMBER: 601 955 9225
(This person must remain on scene during the entire event)

NAME OF ORGANIZATION: Salvation ARMY Women's Auxiliary

ADDRESS: 570 East Beasley Rd. CITY/STATE/ZIP: Jackson, MS 39206

ESTIMATED CROWD SIZE: 250-300 NUMBER OF EVENT PERSONNEL: 30-50

ARRANGEMENTS FOR RESTROOM FACILITIES: ☒ YES ☐ NO LOCATION:

ARRANGEMENTS FOR SITE CLEAN-UP: ☒ YES ☐ NO DETAILS:

RECYCLING PROGRAM FOR WASTE: ☐ YES ☒ NO DETAILS: TSA + SAWA are committed to doing those things necessary to support the City's vision of a green environment.

The City of Ridgeland will assist organizers in planning and locating recycle bins for recyclable waste through local companies. Event organizers are encouraged to maintain the City of Ridgeland's vision of a green environment by having your event recycle its waste.

Will the organizers of this event use the services of an UAS (unmanned aircraft system): ☐ YES ☒ NO
If Yes, who is the operator of the system: Cell Number:
If an UAS/Drone will be utilized, a copy of the following required documents must be attached to this application:

- Section 333 Exemption or Aircraft Certification
- Certificate of Authorization (COA)
- Aircraft Registration and Markings
- Pilot Certificate

FIRST AID/MEDICAL STATION(s): ☒ YES ☒ NO LOCATION(s):

POLICE/SECURITY PERSONNEL REQUIRED: ☐ Police Dept. Assigned ☐ Self-Hired ☐ Not Applicable

ASSISTANCE FROM OTHER CITY DEPARTMENTS: ☐ Fire Department ☐ Public Works/Streets ☐ Recreation/Parks

Applicant Printed Name: Laurie Hollingsworth Contact Number: 601 613 5461

Applicant Signature: Laurie Hollingsworth Date: April 13, 2018

Application Instructions

1). You must present to the Chief of Police or his designee your plan for parking and traffic control. You must state in this plan whether or not police or private security personnel will be needed to direct and handle traffic and parking.

2). City of Ridgeland Special Events Ordinance section 10-33(2) requires adequate security be provided at special events. This requirement is one security officer for every 400 people in attendance. A private security company may be used but preference shall be given to the hiring of off duty personnel. The assistance from Ridgeland Police Department for road course races/walks to secure intersections shall not be considered as part of the security requirement. The personnel assigned for traffic control are in addition to any requirement for on site security personnel required in the ordinance.

3). If the event is to have outdoor music, a Permit to Play on Premises Music will be required from the applicant agreeing to comply with the noise ordinance of the City of Ridgeland, MS.

4). If there is a need for Police Dept., Fire Dept., Public Works Dept. and/or Rec/Parks Dept. personnel to work in controlling the special event, the applicant will agree to pay this cost from the filing of a bond fee.

5). The applicant may be required to post a bond fee in the minimum amount of one thousand dollars ($1,000.00) with the City Clerk. This is to ensure that the event area is immediately cleaned up after its conclusion, and any City employee who works overtime as a result of the special event, will be compensated from the bond proceeds.

6). Submit the above application and information to the Office of the Chief of Police with a non-refundable filing fee of one hundred dollars ($100.00) along with the above referenced bond fee. This application will be forwarded to the Patrol Division Commander or a designee who will review the application for all required documentation. This application and documentation will be presented to the Ridgeland Board of Aldermen for subsequent approval. **Please allow a minimum of 30 days to complete the process and receive approval.**

7). Event organizers should submit a map outlining the area where an event is to be held. Points of interest (entrance/exit points, first aid stations, etc…) shall be included on this map. If the event is a road race/walk, a map reflecting the proposed course route along with a description of the route shall be included. If any portion of the route will include sections of the Natchez Trace Parkway, you must first obtain approval from the Natchez Trace Chief (phone no. 662-680-4014; Ridgeland office 601-856-7321) and documentation reflecting this approval must be submitted with this application.

8). If the event is to be held at Old Trace Park and/or Madison Landing, you must first seek approval from PRVWSD Parks and Recreation (601-856-6319) and obtain a Facility Use Application which must be submitted with this application.

9). The number of event personnel will represent the number of people from the organization who will be assisting with the overall operation of the event. This will include any volunteers from the organization.

10). The arrangements for restroom facilities as addressed in the Ridgeland Code of Ordinances indicate 1 restroom per 150 people in attendance. These may be portable restrooms or existing restroom structures.

11). The event organizer or organization will be responsible for clean-up at the conclusion of the event. The City of Ridgeland encourages organizations to participate in a recycle program for any waste or debris to be discarded.

12). The first aid station located on the event site shall be manned by a state certified EMT.

13). The number of police/security personnel shall be determined by the expected crowd size. The event organizer may staff the event to satisfy this requirement through off-duty law enforcement personnel. The Ridgeland Police Department will assist the organizers if they choose the police department assigned option, or the event organizers may choose the self-hire option to select their own personnel to comply with the ordinance.

For Police Department Use Only

This application was received by the Ridgeland Police Department on 4-13-18 and has been reviewed by the appropriate personnel. This application has been APPROVED / DENIED by the Chief of Police or Designee. If approved by Ridgeland PD, this application will be submitted for consideration at the Ridgeland Mayor and Board of Alderman meeting to be held on 7-17-18.

Chief of Police or Designee: [signature] DATE: 7/11/18

Number of Overtime Officers: 9 Estimated OT Cost: $729.00

Additional Overtime Cost for City Departments: FIRE Ø P/W Ø REC/PARKS Ø

the city of RIDGELAND

CITY OF RIDGELAND
APPLICATION FOR
PERMIT TO PLAY ON PREMISES MUSIC

(Please allow minimum 30 days for approval)

DATE OF APPLICATION: 4/13/18

EVENT NAME: Labor of Love 10K + 5K Walk/Run

EVENT LOCATION: 1052 Highland Colony Parkway, Ridgeland, MS 39157

DESCRIPTION OF ON-PREMISES ACTIVITY: Race Fundraiser for the Salvation Army.

DATE OF ACTIVITY: Beginning 9/3/18 to Ending 9/3/18

HOURS OF ACTIVITY: Beginning 6:30 AM to Ending 10:30 AM

ACTIVITY POINT OF CONTACT: Becky Cade CELL NUMBER: 601 955 9225
(This person must remain on scene during the entire event)

NAME OF ORGANIZATION: The Salvation Army Women's Auxiliary

ADDRESS: 570 E. Beasley Rd CITY/STATE/ZIP: Jackson, MS 39206

MAXIMUM NOISE LEVEL (In Decibels) TO BE EMITTED AT NEAREST PREMISES BOUNDARY:

PROVIDE FACTS THAT WOULD SHOW THE ACTIVITY FOR WHICH THE PERMIT IS REQUESTED WOULD NOT DISTURB THE PEACE OF ANY FAMILY OR PERSON WITHIN THE AREA INTO WHICH SOUND SHALL CARRY: Music will be used as a enticement of excitement for the event and during the event. Noise level will be low and only placed for the surrounding area at the beginning areana.

THE CHIEF OF POLICE SHALL HAVE THE AUTHORITY TO REVOKE ANY PERMIT ISSUED.

Applicants Signature: Date:

☒ APPROVED
☐ DENIED

Chief of Police or Designee:: [signature]
Date: 7/11/18

In the event a permit is denied, the applicant may appeal the decision to the Mayor and Board of Aldermen. Any such appeal shall be taken not more than ten (10) days from the denial of a permit by giving written notice of the appeal to the Ridgeland City Clerk.

THE SALVATION ARMY WOMEN'S AUXILIARY LABOR OF LOVE 5K WALK / RUN

DATE: Labor Day – Monday, September 3, 2018
TIMES: Registration: 6:30 AM to 7:30 AM
5K Begins: 7:30 AM

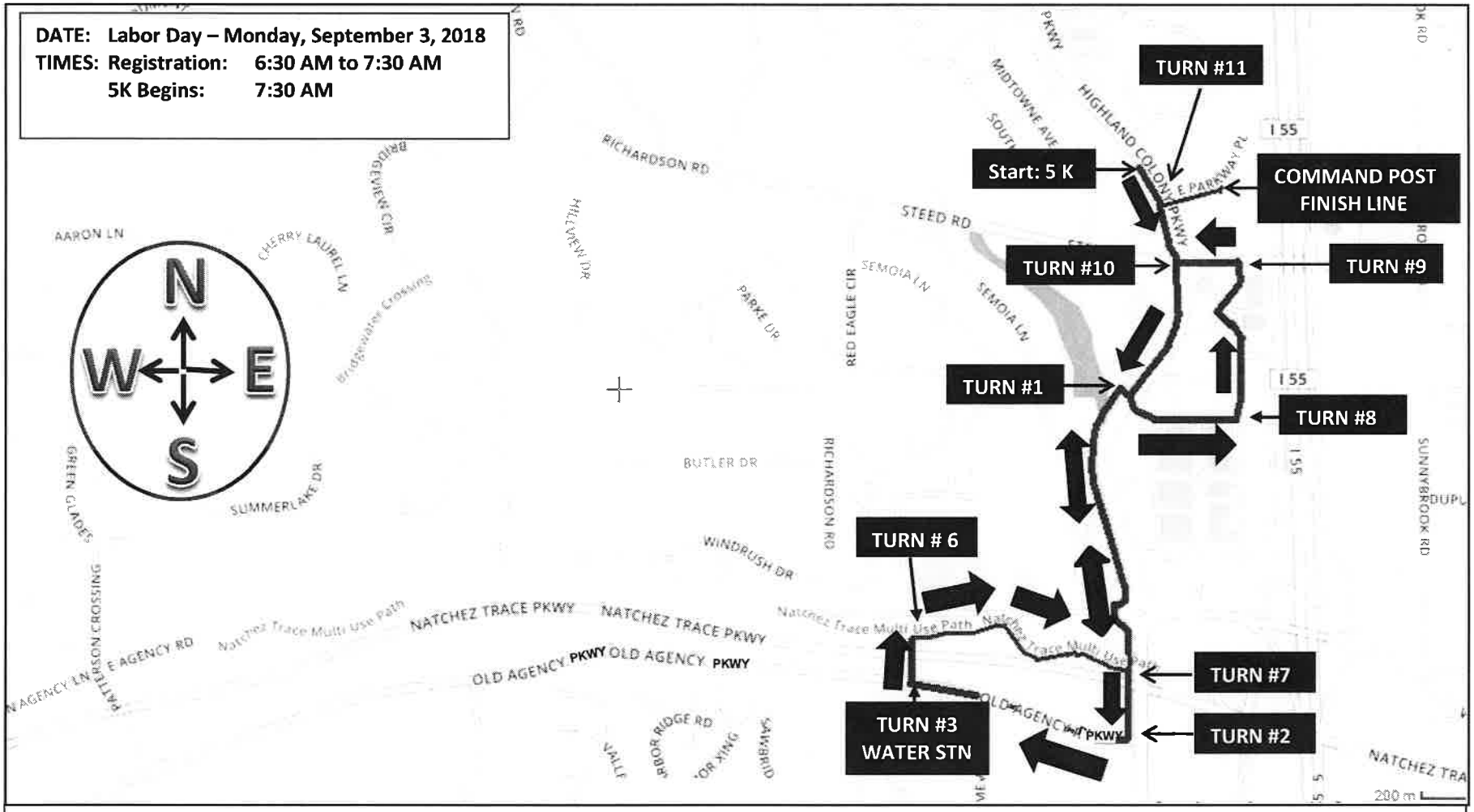

5K LOCATIONS & ROUTE

START:	South on Highland Colony Pkwy across from Harper, Rains, Knight
TURN #1:	Turn RIGHT onto West Parkway Place & LEFT onto Ridgeland Multi-Use Trail
TURN #2:	Turn RIGHT onto Old Agency Parkway
TURN #3:	Turn RIGHT onto Greenwood Crossing (WATER STATION)
TURN #6:	Turn RIGHT onto Natchez Trace Multi-Use Pathway
TURN #7:	Turn LEFT onto Highland Colony Parkway
TURN #1:	Turn RIGHT onto West Parkway Place
TURN #8:	Turn LEFT onto Hyatt Place Ring Road
TURN #9:	Turn LEFT onto Steed Road
TURN #10:	Turn RIGHT onto Highland Colony Parkway
TURN #11:	Turn RIGHT onto East Parkway Place to FINISH LINE
FINISH LINE:	On East Parkway Place at Harper, Rains, Knight and Company

THE SALVATION ARMY WOMEN'S AUXILIARY LABOR OF LOVE 10K WALK / RUN

DATE: Labor Day – Monday, September 3, 2018
TIMES: Registration: 6:30 AM to 7:30 AM
10K Begins: 7:30 AM

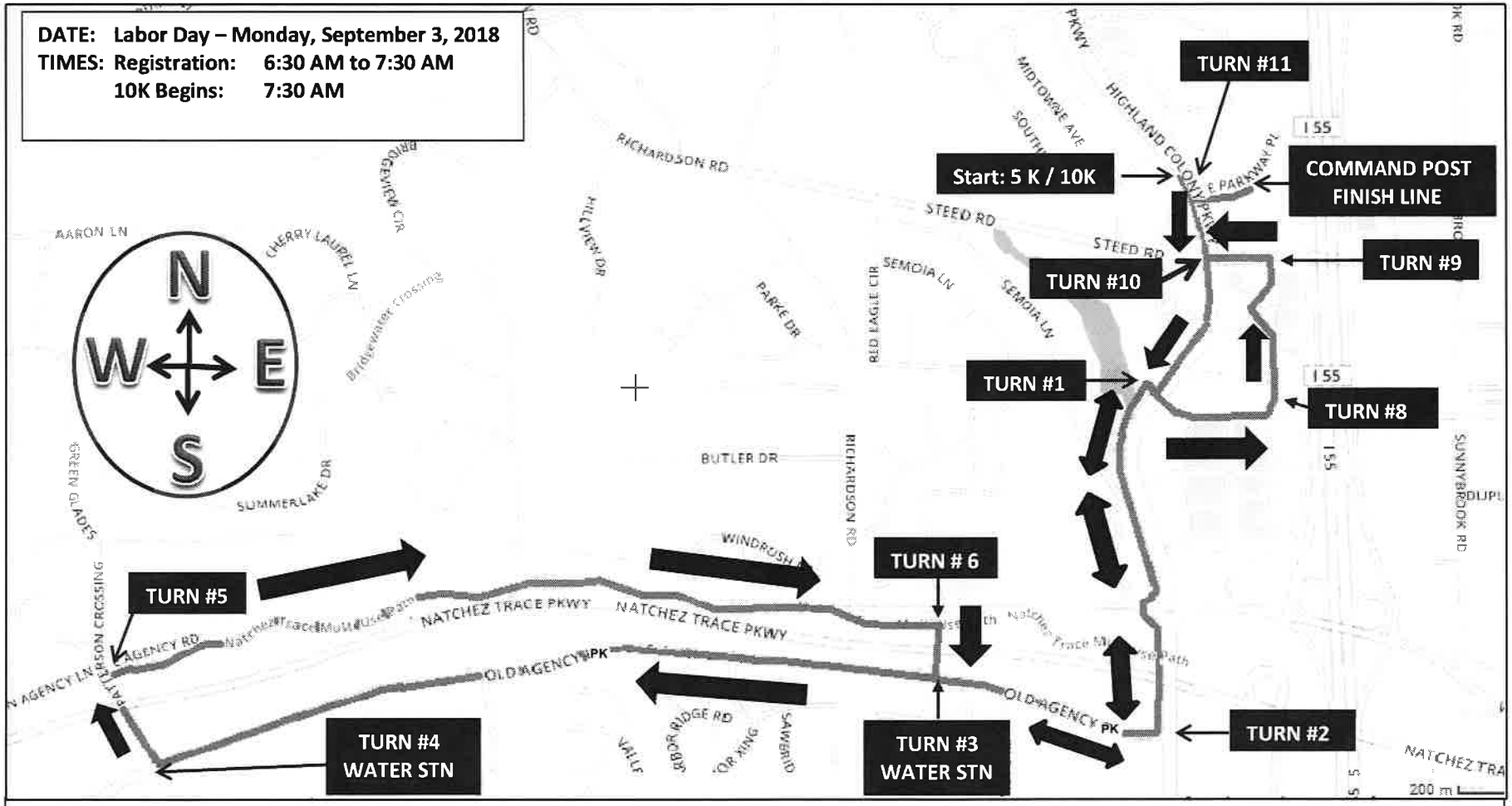

10K LOCATIONS & ROUTE

START:	South on Highland Colony Pkwy across from Harper, Rains, Knight	TURN #2:	Turn LEFT onto Highland Colony Parkway
TURN #1:	Turn RIGHT onto West Parkway Place & LEFT onto Ridgeland Multi-Use Trail	TURN #1:	Turn RIGHT onto West Parkway Place
TURN #2:	Turn RIGHT onto Old Agency Parkway	TURN #8:	Turn LEFT onto Hyatt Place Ring Road
TURN #4:	Turn RIGHT onto Patterson Crossing (WATER STATION)	TURN #9:	Turn LEFT onto Steed Road
TURN #5:	Turn RIGHT onto Natchez Trace Multi-Use Path (RESTROOMS)	TURN #10:	Turn RIGHT onto Highland Colony Parkway
TURN #6:	Turn RIGHT onto Greenwood Crossing	TURN #11:	Turn RIGHT onto East Parkway Place to FINISH LINE
TURN #3:	Turn LEFT onto Old Agency Parkway (WATER STATION)	FINISH LINE:	On East Parkway Place at Harper, Rains, Knight and Company

Post Assignment
Salvation Army
Labor of Love 5K/10K
September 3, 2018

Officer	Badge No.	Patrol Car	Post Assignment	Post #
Cpl. Chapin	85	MC/PC	Command	Rover/Lead
J. Finnegan	136	MC/PC	Steed Rd./ HCP Course rover	1/Rover
B. Johnson	153	PC	West Parkway Pl./HCP	2
B. Hollingsworth	154	346	Old Agency Rd./MPT	3
M. Witt	155	357	Old Agency Rd./ MPT	4
C. Lewis	148	355	HCP/ Old Agency Parkway	5
G. Waters	142	336	Old Agency Parkway/Greenwood Crossing	6
C. Campbell	164	TBA	Greenwood Crossing/ MPT	7
C. Littleton	174	TBA	Steed Rd. / Parkway Dr.	8

There will be a roll call briefing at **0630** hours with officers on post no later than **0715** hours. Officers are to utilize **TAC-1** channel for the event and wear special detail uniform along with traffic safety vest.

Post 1

Officer will work traffic so that runners may travel south on Highland Colony Parkway through Steed Rd. Once all runners have cleared Steed Officer will rover the course and assist where needed.

Post 2

Officer will work traffic as participants make their way through the intersection and enter the multi-purpose trail and continue south. Upon the return of the participants officer will stop traffic to allow the participants to cross Highland Colony Parkway into the Renaissance.

Post 3

Officer will work traffic so that all east and west bound traffic is held to allow participants to cross Old Agency Road.

Post 4

Officer will block the right lane so that participants can exit the multi-purpose trail onto Highland Colony Parkway. Officer will make sure that all traffic stays in the left lane as the 10K will return in the oncoming right lane back onto MPT.

Post 5

Officer will work traffic so that participants may turn right onto Old Agency Parkway and upon return of participants work traffic so that the runners may enter the inside lane closest to curb (left side looking north).

Post 6

Officer will work traffic making sure participants have right of way as they travel west and upon returning, making sure they get back out onto Old Agency Parkway headed east.

Post 7

Officer will work traffic making sure participants have right of way as they exit the multi-purpose trail onto Greenwood Crossing south to Old Agency Parkway.

Post 8

Officer will work traffic making sure that participants are able to cross Steed Road into the far right lane as they make their way to the finish.

THE FACE OF THIS DOCUMENT HAS A COLORED BACKGROUND ON WHITE PAPER. THIS PAPER IS ALTERATION PROTECTED.

THE SALVATION ARMY
JACKSON WOMEN'S AUXILIARY
P.O. BOX 31954
JACKSON, MS 39286

BANKCORP SOUTH
JACKSON, MS 39201
85-127/842

000179

DATE
Apr 11, 2018

AMOUNT
$1,000.00

One Thousand Dollars and 00 Cents

Pay to the Order of:

CITY OF RIDGELAND

VOID AFTER 90 DAYS
THE SALVATION ARMY BY:

Gwendolyn Bell
AUTHORIZED SIGNATURE

Jessica Hedgie
COUNTER SIGNATURE

⑈000179⑈ ⑆084201278⑆8211003843⑈

THIS CHECK HAS A COLORED SAFETY PANTOGRAPH AND A SALVATION ARMY WATERMARK ON THE REVERSE SIDE.

THE SALVATION ARMY

THE FACE OF THIS DOCUMENT HAS A COLORED BACKGROUND ON WHITE PAPER. THIS PAPER IS ALTERATION PROTECTED.

THE SALVATION ARMY
JACKSON WOMEN'S AUXILIARY
P.O. BOX 31954
JACKSON, MS 39286

BANKCORP SOUTH
JACKSON, MS 39201
85-127/842

000180

DATE
Apr 11, 2018

AMOUNT
$100.00

One Hundred Dollars and 00 Cents

Pay to the Order of:

CITY OF RIDGELAND

VOID AFTER 90 DAYS
THE SALVATION ARMY BY:

Gwendolyn Bell
AUTHORIZED SIGNATURE

Jessica Hedgie
COUNTER SIGNATURE

⑈000180⑈ ⑆084201278⑆8211003843⑈

THIS CHECK HAS A COLORED SAFETY PANTOGRAPH AND A SALVATION ARMY WATERMARK ON THE REVERSE SIDE.

the city of RIDGELAND

police department

July 11, 2018

TO: Mayor & Board of Aldermen

FROM: Eric Redd, Assistant Chief of Police

SUBJECT: Special Event – Living Testament (Going Blue for Myositis)

I have attached a request for a Special Event Permit from D'Andre Jones with Living Testament. This event is to raise awareness and funds for those with the rare muscle disease Myositis and is scheduled for Sunday, August 19, 2018 from 2:00 p.m. until 6:00 p.m. to be held at Old Trace Park. Event activities will include a 100 foot slip-n-slide and a disc jockey.

Mr. Jones is expecting a crowd of approximately 250 throughout the day. The facilities at Old Trace Park will be available for use to accommodate participants and will provide portable restrooms on site, if needed. A first aid/medical station will also be available on site. Living Testament staff will be responsible for set-up and clean-up upon conclusion of the event.

This event will not generate overtime for the police department and they will be hiring their own security. The on-duty beat officer will conduct periodic patrols of the area and assist, if needed.

Checks in the amount of $100.00 and $1,000.00 representing requisite filing fee and bond money are attached along with the application for Permit to Play On-Premises Music and Facility Use Application.

Your consideration and approval will be greatly appreciated.

CC: Lt. Tony Willridge

Attachments (1)

115 west school street · ridgeland, ms 39157
ph: 601.856.2121 · www.ridgelandms.org

Gene F. McGee, cmo - mayor · John R. Neal - chief of police
board of aldermen: D.I. Smith, cmo - at-large · Ken Heard, cmo - ward 1 · Chuck Gautier, cmo - ward 2
Kevin Holder, cmo, mayor pro tempore - ward 3 · Brian P. Ramsey, cmo - ward 4 · Bill Lee - ward 5 · Wesley Hamlin, cmo - ward 6

the city of RIDGELAND

CITY OF RIDGELAND
SPECIAL EVENT PERMIT APPLICATION

(Please allow minimum 30 days for approval)

EVENT NAME: Going Blue for Myositis

EVENT LOCATION: Old Trace Park

EVENT DATE: Beginning 8-19-18 to Ending 8-19-18 Multiple Days: ☐ YES ☒ NO

EVENT HOURS: Beginning 2:00pm to Ending 6:00pm

TYPE OF EVENT: Awareness and fund raising

EVENT POINT OF CONTACT: D'Andre Jones CELL NUMBER: (713)-705-7726
(This person must remain on scene during the entire event)

NAME OF ORGANIZATION: Living Testament

ADDRESS: 6335 Whitestone rd. CITY/STATE/ZIP: Jackson, MS 39206

ESTIMATED CROWD SIZE: 250 NUMBER OF EVENT PERSONNEL: 9

ARRANGEMENTS FOR RESTROOM FACILITIES: ☒ YES ☐ NO LOCATION:

ARRANGEMENTS FOR SITE CLEAN-UP: ☒ YES ☐ NO DETAILS: My staff will be instructed to make sure everything is cleaned before we leave the site.

RECYCLING PROGRAM FOR WASTE: ☒ YES ☐ NO DETAILS: All paper and plastic will be disposed of in the designated recycling areas.

The City of Ridgeland will assist organizers in planning and locating recycle bins for recyclable waste through local companies. Event organizers are encouraged to maintain the City of Ridgeland's vision of a green environment by having your event recycle its waste.

Will the organizers of this event use the services of an UAS (unmanned aircraft system): ☐ YES ☒ NO
If Yes, who is the operator of the system: Cell Number:
If an UAS/Drone will be utilized, a copy of the following required documents must be attached to this application:

- Section 333 Exemption or Aircraft Certification
- Certificate of Authorization (COA)
- Aircraft Registration and Markings
- Pilot Certificate

FIRST AID/MEDICAL STATION(s): ☒ YES ☐ NO LOCATION(s): On site

POLICE/SECURITY PERSONNEL REQUIRED: 2 ☐ Police Dept. Assigned ☒ Self-Hired ☐ Not Applicable

ASSISTANCE FROM OTHER CITY DEPARTMENTS: ☐ Fire Department ☐ Public Works/Streets ☐ Recreation/Parks

Applicant Printed Name: D'Andre Jones Contact Number: (713)-705-7726

Applicant Signature: D'Andre Jones Date: 7-4-18

Application Instructions

1). You must present to the Chief of Police or his designee your plan for parking and traffic control. You must state in this plan whether or not police or private security personnel will be needed to direct and handle traffic and parking.

2). City of Ridgeland Special Events Ordinance section 10-33(2) requires adequate security be provided at special events. This requirement is one security officer for every 400 people in attendance. A private security company may be used but preference shall be given to the hiring of off duty personnel. The assistance from Ridgeland Police Department for road course races/walks to secure intersections shall not be considered as part of the security requirement. The personnel assigned for traffic control are in addition to any requirement for on site security personnel required in the ordinance.

3). If the event is to have outdoor music, a Permit to Play on Premises Music will be required from the applicant agreeing to comply with the noise ordinance of the City of Ridgeland, MS.

4). If there is a need for Police Dept., Fire Dept., Public Works Dept. and/or Rec/Parks Dept. personnel to work in controlling the special event, the applicant will agree to pay this cost from the filing of a bond fee.

5). The applicant may be required to post a bond fee in the minimum amount of one thousand dollars ($1,000.00) with the City Clerk. This is to ensure that the event area is immediately cleaned up after its conclusion, and any City employee who works overtime as a result of the special event, will be compensated from the bond proceeds.

6). Submit the above application and information to the Office of the Chief of Police with a non-refundable filing fee of one hundred dollars ($100.00) along with the above referenced bond fee. This application will be forwarded to the Patrol Division Commander or a designee who will review the application for all required documentation. This application and documentation will be presented to the Ridgeland Board of Aldermen for subsequent approval. **Please allow a minimum of 30 days to complete the process and receive approval.**

7). Event organizers should submit a map outlining the area where an event is to be held. Points of interest (entrance/exit points, first aid stations, etc…) shall be included on this map. If the event is a road race/walk, a map reflecting the proposed course route along with a description of the route shall be included. If any portion of the route will include sections of the Natchez Trace Parkway, you must first obtain approval from the Natchez Trace Chief (phone no. 662-680-4014; Ridgeland office 601-856-7321) and documentation reflecting this approval must be submitted with this application.

8). If the event is to be held at Old Trace Park and/or Madison Landing, you must first seek approval from PRVWSD Parks and Recreation (601-856-6319) and obtain a Facility Use Application which must be submitted with this application.

9). The number of event personnel will represent the number of people from the organization who will be assisting with the overall operation of the event. This will include any volunteers from the organization.

10). The arrangements for restroom facilities as addressed in the Ridgeland Code of Ordinances indicate 1 restroom per 150 people in attendance. These may be portable restrooms or existing restroom structures.

11). The event organizer or organization will be responsible for clean-up at the conclusion of the event. The City of Ridgeland encourages organizations to participate in a recycle program for any waste or debris to be discarded.

12). The first aid station located on the event site shall be manned by a state certified EMT.

13). The number of police/security personnel shall be determined by the expected crowd size. The event organizer may staff the event to satisfy this requirement through off-duty law enforcement personnel. The Ridgeland Police Department will assist the organizers if they choose the police department assigned option, or the event organizers may choose the self-hire option to select their own personnel to comply with the ordinance.

For Police Department Use Only

This application was received by the Ridgeland Police Department on 7/9/18 and has been reviewed by the appropriate personnel. This application has been APPROVED / DENIED by the Chief of Police or Designee. If approved by Ridgeland PD, this application will be submitted for consideration at the Ridgeland Mayor and Board of Alderman meeting to be held on 7-17-18.

Chief of Police or Designee: _____ DATE: 7/11/18

Number of Overtime Officers: Ø Estimated OT Cost: Ø

Additional Overtime Cost for City Departments: FIRE Ø P/W Ø REC/PARKS Ø

the city of RIDGELAND

CITY OF RIDGELAND
APPLICATION FOR
PERMIT TO PLAY ON PREMISES MUSIC

(Please allow minimum 30 days for approval)

DATE OF APPLICATION: 7-6-18

EVENT NAME: Going Blue for Myositis

EVENT LOCATION: Old Trace Park

DESCRIPTION OF ON-PREMISES ACTIVITY: 100 ft slip and slide with blue foam to raise awareness and funds for those with myositis.

DATE OF ACTIVITY: Beginning 8-19-18 to Ending 8-19-18

HOURS OF ACTIVITY: Beginning 2:00pm to Ending 6:00pm

ACTIVITY POINT OF CONTACT: D'Andre Jones CELL NUMBER: (713)-705-7726
(This person must remain on scene during the entire event)

NAME OF ORGANIZATION: Living Testament

ADDRESS: 6335 Whitestone rd. CITY/STATE/ZIP: Jackson, MS 39206

MAXIMUM NOISE LEVEL (In Decibels) TO BE EMITTED AT NEAREST PREMISES BOUNDARY: 90 decibels

PROVIDE FACTS THAT WOULD SHOW THE ACTIVITY FOR WHICH THE PERMIT IS REQUESTED WOULD NOT DISTURB THE PEACE OF ANY FAMILY OR PERSON WITHIN THE AREA INTO WHICH SOUND SHALL CARRY: My DJ has been notified about the maximum noise level. Also also speakers will be facing the water and away from homes.

THE CHIEF OF POLICE SHALL HAVE THE AUTHORITY TO REVOKE ANY PERMIT ISSUED.

Applicants Signature: D'Andre Jones Date: 7-6-18

☒ APPROVED
☐ DENIED

Chief of Police or Designee:: SKd
Date: 7/11/18

In the event a permit is denied, the applicant may appeal the decision to the Mayor and Board of Aldermen. Any such appeal shall be taken not more than ten (10) days from the denial of a permit by giving written notice of the appeal to the Ridgeland City Clerk.

FACILITY USE APPLICATION

1. Name of Facility: Old Trace Park Event Name: Going Blue for Myositis
2. Date Requested Sunday Aug. 19, 2018 Time of Event: 2pm To 6pm
3. Sponsoring Organization: Living Testament
   Address: 6335 Whitestone rd. Jackson, MS 39206
   Contact Person: D'Andre Jones Contact Number: (713)-705-7726
   Email Address: drethe808@gmail.com
4. How many people do you anticipate attending the event? 250
5. Will Concessions or Products be sold: Yes: X No: ____
   Will a Gate Fee be charged: Yes: X No: ____
   Will Service Fees be charged: Yes: ____ No: X
6. Will there be amplified music at event? (not to exceed 90 decibels) Yes: X No: ____
7. Will there be equipment / structures brought in for set-up? Yes: X No: ____
8. State in detail the nature of the event. Please use map to show location of event and its activities within the facility. I will be creating a 100ft. slip and slide that will be covered in a blue foam to help raise awareness for a rare muscle disease called myositis.
9. State in detail your traffic control plan. Please use map to show details.

   N/A
10. State in detail your public toilet service plan:

    I plan on using the facilities at the park and will also provide portable toilets if needed.
11. Certificate of Liability Insurance is required. Must be submitted to the PRV Parks & Recreation Department 10 days prior to event. ($1Million minimum)

PERMIT WILL NOT BE VALID WITHOUT THE FOLLOWING SIGNATURES:

City of Ridgeland Special Events Permit
OR Rankin County Sheriff's Department: _____

Chief Perry Waggener of the PRVWSD Reservoir Patrol: _____

PRVWSD Parks & Recreation Department: _____

ROSS BARNETT RESERVOIR

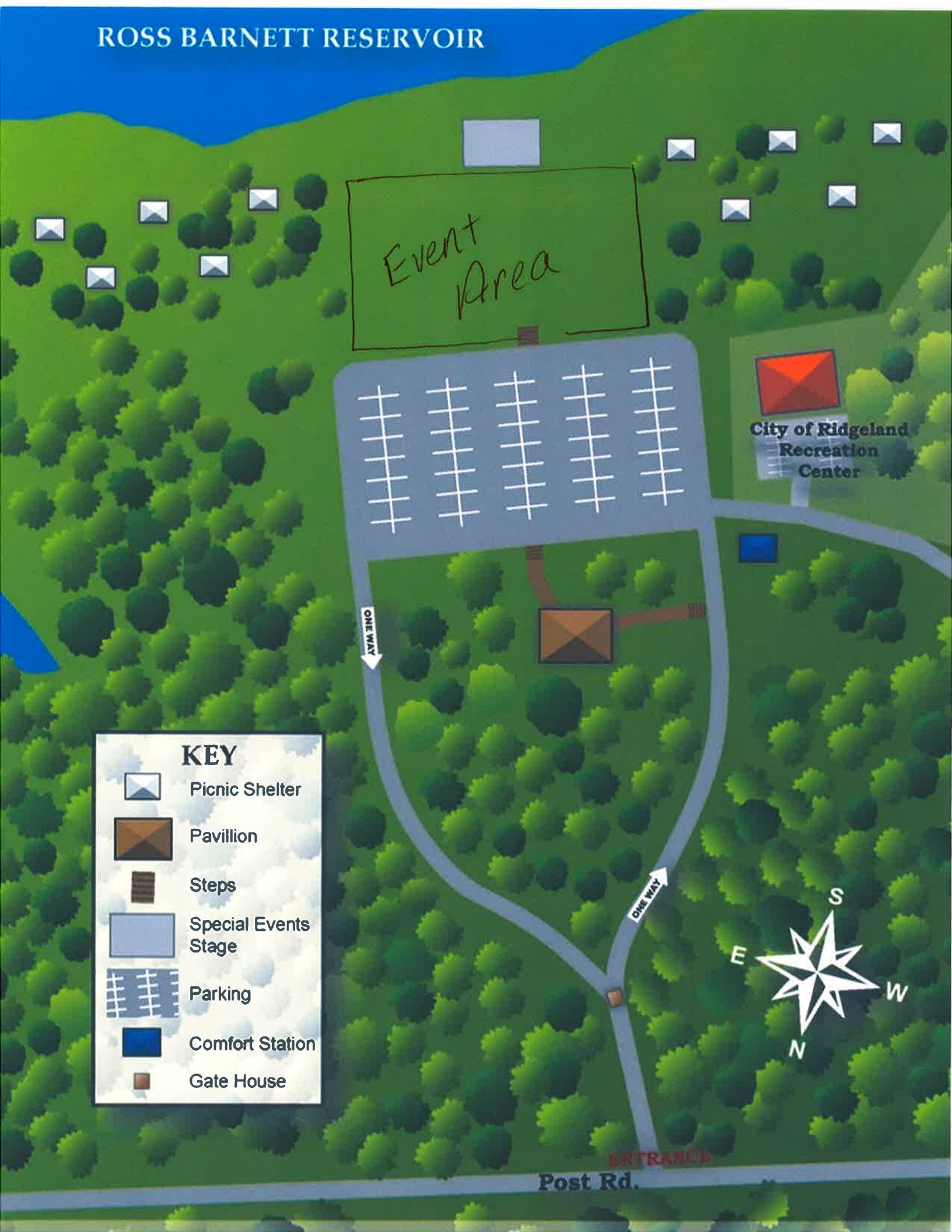

THIS DOCUMENT HAS AN ARTIFICIAL WATERMARK PRINTED ON THE BACK. THE FRONT OF THE DOCUMENT HAS A MICRO-PRINT SIGNATURE LINE. ABSENCE OF THESE FEATURES WILL INDICATE A COPY.

PERSONAL MONEY ORDER

Trustmark

600649050

M 3773473

85-27
653

DATE 7/9/2018

PAY TO THE ORDER OF City of Ridgeland

=NOT VALID FOR OVER ONE THOUSAND U.S. DOLLARS=

AMOUNT ****One Thousand and 00/100******** DOLLARS

DRAWER: TRUSTMARK NATIONAL BANK

PURCHASER, BY SIGNING YOU AGREE TO THE TERMS ON THE CUSTOMER COPY

00006 02

D'Andre Jones MP

PURCHASER, SIGNER FOR DRAWER

6335 Whitestone rd.

ADDRESS Jackson, MS 39206

DRAWEE: TRUSTMARK NATIONAL BANK, JACKSON, MS

⑈600649050⑈ ⑆065300279⑆ ⑈1002044600⑈

THIS DOCUMENT HAS AN ARTIFICIAL WATERMARK PRINTED ON THE BACK. THE FRONT OF THE DOCUMENT HAS A MICRO-PRINT SIGNATURE LINE. ABSENCE OF THESE FEATURES WILL INDICATE A COPY.

PERSONAL MONEY ORDER

Trustmark

600649049

M 3773473

85-27
653

DATE 7/9/2018

PAY TO THE ORDER OF City of Ridgeland

=NOT VALID FOR OVER ONE THOUSAND U.S. DOLLARS=

AMOUNT ****One Hundred and 00/100******** DOLLARS

DRAWER: TRUSTMARK NATIONAL BANK

PURCHASER, BY SIGNING YOU AGREE TO THE TERMS ON THE CUSTOMER COPY

00006 02

D'Andre Jones MP

PURCHASER, SIGNER FOR DRAWER

6335 Whitestone rd.

ADDRESS Jackson, MS 39206

DRAWEE: TRUSTMARK NATIONAL BANK, JACKSON, MS

⑈600649049⑈ ⑆065300279⑆ ⑈1002044600⑈

PROFESSIONAL SERVICES AGREEMENT

TO ENGAGE THE SERVICES OF BURNS COOLEY DENNIS, INC.

To perform Geotechnical Services for Proposed Fitness Building – Ridgeland Police Department

This Agreement has been entered into on the 6th day of July, 2018 between **City of Ridgeland,** hereinafter referred to as "Client," and **BURNS COOLEY DENNIS, INC.**, hereinafter referred to as " Geotechnical Engineer," for mutual consideration as hereinafter set forth.

A. Geotechnical Engineer agrees to conduct a geotechnical exploration for evaluation of foundation soils of the proposed lightly loaded, one story, pre-engineered metal structure encompassing approximately 1,000 sq. ft. to be constructed behind the Ridgeland Police Department on West School Street. The exploration will include the following services:

1. Perform two (2) auger borings to maximum depth of 10 ft.
2. Perform geotechnical soil laboratory tests for typical soils within construction zone of building foundation.
3. Perform classification tests on representative soil samples.
4. Prepare a report to present findings of the soil borings, subsurface soil laboratory testing and earthwork and foundation recommendations.

B. Geotechnical Engineer agrees to perform earthwork and concrete testing services during the construction of the proposed fitness building.

C. For the services described, Client agrees to compensate Geotechnical Engineer a lump sum fee of **$2,000.00**.

D. The General Conditions for Engineering Services presented on the following sheet are hereby incorporated into and made a part of this Agreement.

E. This Agreement is e-mailed for review and execution. Please print, sign and return either by e-mail or by fax to Burns Cooley Dennis, Inc. at (601) 856-3552.

Additional services, including construction observations and testing, are available and can be performed later at your request, but are specifically excluded from this Agreement (These additional services will be invoiced according to attached BCD fee schedule).

CITY OF RIDGELAND	BURNS COOLEY DENNIS, INC.
OWNER	GEOTECHNICAL ENGINEER
	RC Ahlrich
John Neal, Chief of Police	R. C. Ahlrich, Ph.D., P.E., Vice President
	July 6, 2018
Date	Date

GENERAL CONDITIONS FOR ENGINEERING SERVICES
BURNS COOLEY DENNIS, INC.

SECTION 1: RIGHT OF ENTRY

1.1 The Client will provide for right of entry of BURNS COOLEY DENNIS, INC. (BCD) and all project information in order to complete the work. While BCD will take all reasonable precautions to minimize damage to property, it is understood by Client that in the normal course of work some damage may occur, the correction of which is not part of this Agreement.

SECTION 2: DISPUTES

2.1 In the event that a dispute should arise relating to the performance of the services to be provided under this Agreement, and should that dispute result in litigation, it is agreed that the prevailing party shall be entitled to recover all reasonable costs incurred in the defense of the claim, including staff time, court costs, attorney's fees and other claim-related expenses.

SECTION 3: STANDARD OF CARE

3.1 Service performed by BCD under this Agreement will be conducted in a manner consistent with that level of care and skill ordinarily exercised by members of the profession currently practicing under similar conditions. No other warranty, express or implied, is made.

3.2 Client recognizes that subsurface conditions may vary from those encountered at the locations where borings or explorations are made by BCD and that our data, interpretations and recommendations are based solely on the information available to us. BCD will be responsible for those data, interpretations, and recommendations, but shall not be responsible for the interpretations of this information by others.

SECTION 4: INSURANCE

4.1 BCD represents that it and its agents, staff and consultants employed by it, is and are protected by workers' compensation insurance and that we have such coverage under public liability and property damage insurance policies which we deem to be adequate. Certificates of insurance for all such policies shall be provided to Client upon request in writing. Within the limits and conditions of such insurance, BCD agrees to indemnify and save Client harmless from and against any loss, damage or liability arising from any negligent acts by BCD and its agents, staff and consultants employed by BCD. BCD shall not be responsible for any loss, damage, or liability beyond the amounts, limits and conditions of such insurance. BCD shall not be responsible for any loss, damage or liability arising from any acts by Client, its agents, staff and other consultants employed by Client.

VENDOR NUMBER	NAME	DOCKET NUMBER	COMMENT	INVOICE NUMBER	INVOICE DATE	INVOICE AMOUNT
01-03969	APPLE INC	147448	APPLE CARE FOR PHONE	I 273626130700	6/25/2018	159.43
			APPLE CARE FOR PHONE	001-042-605	149.00	
			TAX	001-042-605	10.43	
01-04971	SHAHINIAN INSURANCE SERVI	147449	INS BALOON GLOW	I 201807104671	6/26/2018	790.00
			INS BALOON GLOW	001-340-650	790.00	
					TOTAL =	949.43

FUND TOTALS

FUND	NAME	TOTAL
001	GENERAL FUND	949.43
	TOTALS FOR ALL FUNDS =	949.43

VENDOR NUMBER	NAME	DOCKET NUMBER	COMMENT	INVOICE NUMBER	INVOICE DATE	INVOICE AMOUNT
01-03495	MISS DEPARTMENT OF REVENU	147450	TAG FOR FIRE DEPT	I 201807104672	6/29/2018	12.00
			TAG FOR FIRE DEPT	001-160-632	12.00	
				TOTAL =		12.00

FUND TOTALS

FUND	NAME	TOTAL
001	GENERAL FUND	12.00
	TOTALS FOR ALL FUNDS =	12.00

VENDOR NUMBER	NAME	DOCKET NUMBER	COMMENT	INVOICE NUMBER	DATE	AMOUNT
01-05258	A T & T GLOBAL SERVICES	147451	JUNE 2018	I GE24198	7/01/2018	229.64
			JUNE 2018	001-100-604	229.64	
01-02402	ACCESS CONTROL GROUP	147452	RFID WINDSHIELD TAGS	I 9671	6/25/2018	50.00
			RFID WINDSHIELD TAGS	001-100-540	50.00	
01-05436	MACKELTRA ADAMS	147453	REMITTANCE OF BOND FEE	I 201807124785	7/12/2018	250.00
			REMITTANCE OF BOND FEE	001-000-122	250.00	
01-01350	ADCAMP INC	147454	ASPHALT TAC	I 37702	6/30/2018	863.05
			ASPHALT TAC	001-201-575	863.05	
01-01350	ADCAMP INC	147455	TONS OF ASPHALT	I 37766	6/30/2018	4,472.72
			TONS OF ASPHALT	001-201-575	4,472.72	
01-01655	ADVANTAGE BUSINESS SYSTEM	147456	PRINTING	I 146898	6/18/2018	76.85
			BLACK/WHITE COPIES	001-340-604	47.25	
			COLORED COPIES	001-340-604	29.60	
01-02164	AETNA	147457	863057-10-00001: JULY 2018	I 201807124694	6/16/2018	2,717.80
			863057-10-00001: JULY 2018	001-010-480	106.00	
			863057-10-00001: JULY 2018	001-020-480	95.40	
			863057-10-00001: JULY 2018	001-040-480	84.80	
			863057-10-00001: JULY 2018	001-040-480	10.60	
			863057-10-00001: JULY 2018	001-092-480	10.60	
			863057-10-00001: JULY 2018	001-100-480	858.60	
			863057-10-00001: JULY 2018	001-160-480	593.60	
			863057-10-00001: JULY 2018	001-180-480	116.60	
			863057-10-00001: JULY 2018	001-201-480	307.40	
			863057-10-00001: JULY 2018	001-340-480	137.80	
			863057-10-00001: JULY 2018	005-101-480	21.20	
			863057-10-00001: JULY 2018	400-650-480	254.40	
			863057-10-00001: JULY 2018	404-650-480	21.20	
			863057-10-00001: JULY 2018	001-000-170	87.98	
			863057-10-00001: JULY 2018	005-000-170	0.00	
			863057-10-00001: JULY 2018	400-000-170	11.62	
			863057-10-00001: JULY 2018	404-000-170	0.00	
01-04417	ALLEN ENGINEERING AND SCI	147458	05-28-18 - 06-24-18 STORMWATER	I 00180464	6/24/2018	1,500.00
			05-28-18 - 06-24-18 STORMWATER	001-201-600	1,500.00	
01-01558	AMERICA'S CHOICE CHEMICAL	147459	HYDRAULIC OIL	I 12676	7/02/2018	2,498.76
			HYDRAULIC OIL	001-201-525	1,249.38	
			HYDRAULIC OIL	400-650-525	1,249.38	
01-04880	AMERICAN TIRE DISTRIBUTOR	147460	P326 TIRES	I S110269987	6/26/2018	475.76
			225/60/18 TIRES P326	001-100-632	471.76	
			TIRE DISPOSAL FEE	001-100-632	4.00	
01-01944	ATMOS ENERGY	147461	3015422613:05-29-18 - 06-28-18	I 201807124696	6/29/2018	81.77
			3015422613:05-29-18 - 06-28-18	001-160-630	81.77	

VENDOR NUMBER	NAME	DOCKET NUMBER	COMMENT	INVOICE NUMBER	DATE	AMOUNT
01-01944	ATMOS ENERGY	147462	3013187195:05-29-18 - 06-28-18	I 201807124697	7/02/2018	30.37
			3013187195:05-29-18 - 06-28-18	001-340-630	30.37	
01-03127	BEAL, KRISTEN	147463	REIMBURSE FOR PRAM TRAINING	I 201807124698	6/29/2018	16.00
			REIMBURSE FOR PRAM TRAINING	001-093-681	16.00	
01-04998	BICYCLE TOUR NETWORK	147464	BICYCLE CONFERENCE	I 201807104667	7/10/2018	385.00
			BICYCLE CONFERENCE	001-340-681	385.00	
01-04998	BICYCLE TOUR NETWORK	147465	BICYCLE CONFERENCE	I 201807104668	7/10/2018	385.00
			BICYCLE CONFERENCE	001-340-681	385.00	
01-06885	BIG TEN TIRE CO INC	147466	FD-UNIT 8	I 5048331	6/26/2018	1,753.38
			BEDLINER	001-160-632	450.00	
			TOOLBOX	001-160-632	889.99	
			NERF BARS	001-160-632	299.99	
			LABOR	001-160-632	105.00	
			SUPPLY CHARGES	001-160-632	8.40	
01-08420	BROWN BOTTLING GROUP INC	147467	DRINKS	I 324632	6/27/2018	999.87
			LEMONADE	001-340-650	176.85	
			PEPSI	001-340-650	176.85	
			MT DEW	001-340-650	176.85	
			DIET DEW	001-340-650	23.58	
			DIET DR. PEPPER	001-340-650	70.74	
			BOTTLE WATER	001-340-650	375.00	
01-08775	BUDGET OFFICE FURNITURE	147468	ADMIN ASSIST. CHAIRS	I 67189	6/25/2018	792.00
			ADMIN ASSIST. CHAIRS	001-100-540	792.00	
01-08775	BUDGET OFFICE FURNITURE	147469	ADMIN ASSIST. CHAIRS	I 67190	6/25/2018	299.00
			EXECUTIVE CHAIR	001-100-540	299.00	
01-02311	BUFKIN MECHANICAL, INC	147470	WORK ORDERS	I 72674	6/26/2018	118.00
			WOLCOTT TRI	001-340-637	118.00	
01-02311	BUFKIN MECHANICAL, INC	147471	WORK ORDERS	I 72769	6/07/2018	1,734.00
			WOLCOTT PARK LEAK	001-340-637	1,734.00	
01-02311	BUFKIN MECHANICAL, INC	147472	WATER LEAK	I 72786	6/29/2018	528.00
			WATER LEAK	001-340-637	528.00	
01-02311	BUFKIN MECHANICAL, INC	147473	WORK ORDERS	I 72796	6/12/2018	304.00
			FRP SHOP FOUNTAIN	001-340-637	304.00	
01-02311	BUFKIN MECHANICAL, INC	147474	WORK ORDERS	I 72799	6/26/2018	769.00
			FRP BLUE FIELD	001-340-637	769.00	
01-05106	C SPIRE BUSINESS SOLUTION	147475	677122: 07-01-18 - 07-31-18	I 1277685	7/01/2018	627.98
			677122: 07-01-18 - 07-31-18	001-020-604	20.16	
			677122: 07-01-18 - 07-31-18	001-042-604	73.81	

VENDOR NUMBER	NAME	DOCKET NUMBER	COMMENT	INVOICE NUMBER	DATE	AMOUNT	
01-05106	C SPIRE BUSINESS SOLUTION	147475	677122: 07-01-18 - 07-31-18	I 1277685	7/01/2018	627.98	CONT
			677122: 07-01-18 - 07-31-18	001-080-604	6.71		
			677122: 07-01-18 - 07-31-18	001-180-604	87.23		
			677122: 07-01-18 - 07-31-18	001-201-604	26.84		
			677122: 07-01-18 - 07-31-18	001-340-604	73.92		
			677122: 07-01-18 - 07-31-18	400-650-604	40.32		
			677122: 07-01-18 - 07-31-18	001-100-604	298.99		
01-03826	C SPIRE WIRELESS	147476	0031656076:05-23-18 - 06-22-18	I 201807124702	6/22/2018	313.69	
			0031656076:05-23-18 - 06-22-18	001-160-605	313.69		
01-03826	C SPIRE WIRELESS	147477	0031656124:05-23-18 - 06-22-18	I 201807124703	6/22/2018	403.34	
			0031656124:05-23-18 - 06-22-18	001-180-605	403.34		
01-03826	C SPIRE WIRELESS	147478	0031656148:05-23-18 - 06-22-18	I 201807124704	6/22/2018	1,033.43	
			0031656148:05-23-18 - 06-22-18	001-201-605	510.08		
			0031656148:05-23-18 - 06-22-18	400-650-605	438.88		
			0031656148:05-23-18 - 06-22-18	404-650-605	84.47		
01-01441	CAPITOL TOWING INC	147479	ARRESTEE TOW -87388	I 87388	7/03/2018	75.00	
			ARRESTEE TOW -87388	001-100-632	75.00		
01-01441	CAPITOL TOWING INC	147480	P307 TOW	I 87510	6/27/2018	55.00	
			P307 TOW #87510	001-100-632	55.00		
01-05287	CARDIO PARTNERS INC	147481	FD-02 SAT CABLE	I 629547	7/04/2018	186.00	
			02 SAT CABLE	001-160-540	186.00		
01-01136	CENTERPOINT ENERGY	147482	30982987: 05-30-18 - 06-29-18	I 201807124705	7/06/2018	47.54	
			30982987: 05-30-18 - 06-29-18	001-100-630	47.54		
01-01136	CENTERPOINT ENERGY	147483	31746860: 05-30-18 - 06-29-18	I 201807124706	7/06/2018	28.01	
			31746860: 05-30-18 - 06-29-18	001-201-630	28.01		
01-01136	CENTERPOINT ENERGY	147484	31762107: 05-30-18 - 06-29-18	I 201807124707	7/06/2018	96.34	
			31762107: 05-30-18 - 06-29-18	001-160-630	96.34		
01-01136	CENTERPOINT ENERGY	147485	31796030: 05-30-18 - 06-29-18	I 201807124708	7/06/2018	31.27	
			31796030: 05-30-18 - 06-29-18	001-092-630	31.27		
01-01136	CENTERPOINT ENERGY	147486	3194247: 05-30-18 - 06-30-18	I 201807124709	7/06/2018	28.01	
			3194247: 05-30-18 - 06-30-18	001-350-630	28.01		
01-01136	CENTERPOINT ENERGY	147487	31942485: 05-30-18 - 06-29-18	I 201807124710	7/06/2018	27.20	
			31942485: 05-30-18 - 06-29-18	001-340-630	27.20		
01-01136	CENTERPOINT ENERGY	147488	31942493: 05-30-18 - 06-29-18	I 201807124711	7/06/2018	38.58	
			31942493: 05-30-18 - 06-29-18	001-160-630	38.58		
01-01136	CENTERPOINT ENERGY	147489	31942501: 05-30-18 - 06-29-18	I 201807124712	7/06/2018	31.27	
			31942501: 05-30-18 - 06-29-18	400-650-630	31.27		

VENDOR NUMBER	NAME	DOCKET NUMBER	COMMENT	INVOICE NUMBER	DATE	AMOUNT
01-01136	CENTERPOINT ENERGY	147490	31942519: 05-30-18 - 06-29-18	I 201807124713	7/06/2018	28.82
			31942519: 05-30-18 - 06-29-18	400-650-630	28.82	
01-01136	CENTERPOINT ENERGY	147491	31984024: 05-30-18 - 06-29-18	I 201807124714	7/06/2018	692.21
			31984024: 05-30-18 - 06-29-18	001-100-630	692.21	
01-02764	CENTRAL MISSISSIPPI CRIME	147492	JUNE 2018	I 201807124701	7/09/2018	701.19
			JUNE 2018	001-000-330	701.19	
01-12050	CENTRAL PIPE SUPPLY INC	147493	WATER PARTS	I S100145973.001	6/27/2018	462.50
			4" MEGA LUG	400-650-575	111.60	
			4" MJ RUBBER	400-650-575	92.00	
			4"MJ 90 ELL	400-650-575	60.00	
			4" MJ FLAT FLANGE	400-650-575	62.40	
			4" TRANS RUBBER	400-650-575	16.00	
			1/2 ROD	400-650-575	11.00	
			1/2 NUTS	400-650-575	1.20	
			1/2 WASHER	400-650-575	0.80	
			RED RUBBER	400-650-575	20.80	
			CHAMBER ASSY.	400-650-575	76.30	
			LARGE O- RING	400-650-575	10.40	
01-12050	CENTRAL PIPE SUPPLY INC	147494	3/4 METER INDEX	I S100146176.001	6/28/2018	3,892.00
			3/4 METER INDEX	400-650-575	3,720.00	
			1" PVC INSERT	400-650-575	130.00	
			INDEX DRIVER WRENCH	400-650-575	42.00	
01-13025	CINTAS CORPORATION LOC #2	147495	08828	I 10526518	6/29/2018	30.00
			08828	001-340-540	30.00	
01-13025	CINTAS CORPORATION LOC #2	147496	02147	I 10526524	6/29/2018	45.61
			02147	001-340-540	45.61	
01-13025	CINTAS CORPORATION LOC #2	147497	04052	I 10526525	6/29/2018	52.99
			04052	001-340-540	52.99	
01-13025	CINTAS CORPORATION LOC #2	147498	02148	I 10526526	6/29/2018	58.85
			02148	001-180-540	47.45	
			02148	400-650-540	11.40	
01-13025	CINTAS CORPORATION LOC #2	147499	04448	I 10527824	7/03/2018	277.46
			04448	001-201-535	277.46	
01-13025	CINTAS CORPORATION LOC #2	147500	04450	I 10527825	7/03/2018	164.72
			04450	400-650-535	151.66	
			04450	404-650-535	13.06	
01-13025	CINTAS CORPORATION LOC #2	147501	04448	I 10527826	7/03/2018	2.59
			04448	001-201-540	2.59	
01-13025	CINTAS CORPORATION LOC #2	147502	04450	I 10527827	7/03/2018	47.32

VENDOR NUMBER	NAME	DOCKET NUMBER	COMMENT	INVOICE NUMBER	DATE	AMOUNT	
01-13025	CINTAS CORPORATION LOC #2	147502	04450	I 10527827	7/03/2018	47.32	CONT
			04450	400-650-540	47.32		
01-13025	CINTAS CORPORATION LOC #2	147503	00025	I 10527828	6/29/2018	312.40	
			00025	001-100-604	312.40		
01-13025	CINTAS CORPORATION LOC #2	147504	08828	I 10529406	7/06/2018	30.00	
			08828	001-340-540	30.00		
01-13025	CINTAS CORPORATION LOC #2	147505	02147	I 10529412	7/06/2018	45.61	
			02147	001-340-540	45.61		
01-13025	CINTAS CORPORATION LOC #2	147506	04052	I 10529413	7/06/2018	52.99	
			04052	001-340-540	52.99		
01-13025	CINTAS CORPORATION LOC #2	147507	02148	I 10529414	7/06/2018	58.85	
			02148	001-180-540	47.45		
			02148	400-650-540	11.40		
01-13025	CINTAS CORPORATION LOC #2	147508	04448	I 10530681A	7/10/2018	279.02	
			04448	001-201-535	279.02		
01-13025	CINTAS CORPORATION LOC #2	147509	04450	I 10530682	7/10/2018	169.39	
			04450	400-650-535	156.33		
			04450	404-650-535	13.06		
01-13025	CINTAS CORPORATION LOC #2	147510	04448	I 10530683	7/10/2018	2.59	
			04448	001-201-540	2.59		
01-13025	CINTAS CORPORATION LOC #2	147511	04450	I 10530684A	7/10/2018	47.32	
			04450	400-650-540	47.32		
01-13601	CLARION LEDGER - SUBSCRIP	147512	CL6284182: 07-01-18 - 07-31-18	I 201807124700	7/12/2018	21.00	
			CL6284182: 07-01-18 - 07-31-18	001-040-686	21.00		
01-02440	COMCAST CABLE	147513	8396410530254032:06-01 - 06-30	I 201807124715	5/27/2018	89.90	
			8396410530254032:06-01 - 06-30	001-160-604	89.90		
01-02440	COMCAST CABLE	147514	7396410560012870:06-28 - 07-27	I 201807124716	6/24/2018	104.85	
			7396410560012870:06-28 - 07-27	001-340-604	104.85		
01-02440	COMCAST CABLE	147515	7396410530214796:07-01 - 07-31	I 201807124717	6/27/2018	234.85	
			7396410530214796:07-01 - 07-31	001-160-604	234.85		
01-02440	COMCAST CABLE	147516	8396410530254032:07-01 - 07-31	I 201807124718	6/27/2018	89.90	
			8396410530254032:07-01 - 07-31	001-160-604	89.90		
01-02440	COMCAST CABLE	147517	8396410530116512:07-04 - 08-03	I 201807124719	7/01/2018	20.95	
			8396410530116512:07-04 - 08-03	001-100-604	20.95		
01-03236	COMPUTER GENERATED SOLUTI	147518	SUPPORT RENEWAL	I N000156211	6/19/2018	900.89	
			SUPPORT RENEWAL	001-010-635	51.30		

VENDOR NUMBER	NAME	DOCKET NUMBER	COMMENT	INVOICE NUMBER	DATE	AMOUNT	
01-03236	COMPUTER GENERATED SOLUTI	147518	SUPPORT RENEWAL	I N000156211	6/19/2018	900.89	CONT
			SUPPORT RENEWAL	001-020-635	30.78		
			SUPPORT RENEWAL	001-042-635	58.14		
			SUPPORT RENEWAL	001-080-635	3.41		
			SUPPORT RENEWAL	001-100-635	344.41		
			SUPPORT RENEWAL	001-160-635	235.29		
			SUPPORT RENEWAL	001-180-635	41.04		
			SUPPORT RENEWAL	001-201-635	37.51		
			SUPPORT RENEWAL	001-340-635	44.33		
			SUPPORT RENEWAL	400-650-635	54.68		
01-01618	CONNECTOR SPECIALISTS OF	147519	REPAIR HYDRAULIC HOSE	I 00797811	7/03/2018	54.88	
			REPAIR HYDRAULIC HOSE	001-201-635	54.88		
01-04436	COVEY, RUSSELL	147520	ADV TRAV: 08-05-18 - 08-10-18	I 201807124699	7/06/2018	167.86	
			ADV TRAV: 08-05-18 - 08-10-18	001-160-610	167.86		
01-04592	CRYSTAL CLEAN SWEEPING IN	147521	05-24-18 - 06-30-18 SERVICES	I 32489	6/30/2018	8,085.36	
			05-24-18 - 06-30-18 SERVICES	001-201-604	8,085.36		
01-16400	CUMMINS MID-SOUTH INC	147522	FD-ENGINE 2	I C6-1668	7/09/2018	1,565.17	
			TURBO ASSEMBLY	001-160-632	1,565.17		
01-16500	CUSTOM PRODUCTS CORP	147523	PAVEMENT MARKINGS	I 306191	6/26/2018	941.70	
			TEMP MARKER YELLOW	001-201-685	400.00		
			YELLOW TAPE	001-201-685	216.68		
			WHITE TAPE	001-201-685	325.02		
01-02613	DATAPROSE, LLC	147524	06-01-18 - 06-30-18	I DP1802037	6/30/2018	3,494.04	
			06-01-18 - 06-30-18	400-650-540	2,719.31		
			06-01-18 - 06-30-18	400-650-604	774.73		
01-17900	DEARING ADDRESSING & MAIL	147525	NEWSLETTER	I 25132	6/29/2018	406.57	
			EMAIL DOWNLOAD	001-340-620	25.75		
			CASS CERTIFY	001-340-620	7.00		
			USPS REQ. NCOA PROC	001-340-620	30.00		
			COMPUTER ADDRESS	001-340-620	26.88		
			FOLDING BY HAND	001-340-620	30.00		
			LASER SHEET	001-340-620	85.89		
			RUBBER STAMPING	001-340-620	20.00		
			WHITE TABS	001-340-620	20.00		
			POSTAGE CHARGES	001-340-620	121.05		
			TABBING MACH SETUP	001-340-620	40.00		
01-18050	DELL MARKETING L.P.	147526	MAYOR NEW PC	I 10251290710	6/28/2018	1,417.78	
			MAYOR NEW PC	001-020-730	1,227.13		
			MONITOR	001-020-730	168.12		
			SOUNDBAR	001-020-730	22.53		
01-01993	DEVINEY RENTAL AND SUPPLY	147527	WAND	I IV73698	7/09/2018	39.00	
			WAND	001-340-635	39.00		

VENDOR NUMBER	NAME	DOCKET NUMBER	COMMENT	INVOICE NUMBER	DATE	AMOUNT
01-18615	DICKEN, BILL	147528	JULY 10, 2018 MEETING	I 071018	7/10/2018	50.00
			JULY 10, 2018 MEETING	001-180-611	50.00	
01-18620	DICKERSON & BOWEN INC	147529	TONS OF ASPHALT	I 73556	6/19/2018	3,292.92
			TONS OF ASPHALT	001-201-575	3,292.92	
01-05360	DUNBAR, DAVID	147530	JULY 10, 2018 MEETING	I 071018	7/10/2018	50.00
			JULY 10, 2018 MEETING	001-180-611	50.00	
01-00690	DUNBARMONROE, PLLC	147531	COMCAST CABLE FRANCHISE	I 17273	7/10/2018	170.00
			COMCAST CABLE FRANCHISE	001-060-601	170.00	
01-20290	E S R I INC	147532	SOFTWARE RENEWAL	I 93485525	7/02/2018	7,757.00
			MAINTENANCE FEES	001-180-635	3,030.00	
			ARC GIS STANDARD	001-180-635	1,515.00	
			ARC GIS DESKTOP	001-180-635	707.00	
			ARC GIS SPATIAL	001-180-635	505.00	
			ARG GIS SERVER	001-180-635	1,000.00	
			ARC GIS WORKSHOP	001-180-635	1,000.00	
01-02850	ELITE WATER & COFFEE SERV	147533	WATER COOLER RENTAL	I 155949	6/30/2018	40.00
			WATER COOLER RENTAL	001-100-540	40.00	
01-21500	ENTERGY	147534	14870935	I 201807124720	7/03/2018	1,137.70
			14870935	001-000-016	1,137.70	
01-21500	ENTERGY	147535	14870968	I 201807124721	7/03/2018	43.70
			14870968	001-160-630	43.70	
01-21500	ENTERGY	147536	14870976	I 201807124722	7/03/2018	27,374.22
			14870976	001-201-684	27,374.22	
01-21500	ENTERGY	147537	14870984	I 201807124723	7/03/2018	5,725.45
			14870984	001-160-630	2,002.30	
			14870984	001-201-630	14.11	
			14870984	001-092-630	2,304.79	
			14870984	001-350-630	1,404.25	
01-21500	ENTERGY	147538	14870992	I 201807124724	7/03/2018	3,997.56
			14870992	001-340-630	3,997.56	
01-21500	ENTERGY	147539	14870943	I 201807124725	7/05/2018	26,986.49
			14870943	001-160-630	649.19	
			14870943	400-650-630	26,337.30	
01-21506	ENTERGY	147540	148884430: 05-24-18 - 06-25-18	I 201807124726	6/27/2018	1,824.52
			148884430: 05-24-18 - 06-25-18	001-201-684	1,824.52	
01-21506	ENTERGY	147541	114576762: 05-28-18 - 06-27-18	I 201807124727	6/29/2018	49.17
			114576762: 05-28-18 - 06-27-18	001-201-684	49.17	

VENDOR NUMBER	NAME	DOCKET NUMBER	COMMENT	INVOICE NUMBER	INVOICE DATE	INVOICE AMOUNT
01-21506	ENTERGY	147542	119515120: 05-25-18 - 06-25-18 I	201807124728	6/29/2018	47.39
			119515120: 05-25-18 - 06-25-18	001-340-630	47.39	
01-21506	ENTERGY	147543	125164566: 05-28-18 - 06-27-18 I	201807124729	6/29/2018	107.25
			125164566: 05-28-18 - 06-27-18	001-201-684	107.25	
01-21506	ENTERGY	147544	125336933: 05-28-18 - 06-27-18 I	201807124730	6/29/2018	39.51
			125336933: 05-28-18 - 06-27-18	001-201-684	39.51	
01-21506	ENTERGY	147545	125345504: 05-28-18 - 06-27-18 I	201807124731	6/29/2018	42.78
			125345504: 05-28-18 - 06-27-18	001-201-684	42.78	
01-21506	ENTERGY	147546	132314451: 05-28-18 - 06-27-18 I	201807124732	6/29/2018	1,743.22
			132314451: 05-28-18 - 06-27-18	400-650-630	1,743.22	
01-21506	ENTERGY	147547	154178826: 05-25-18 - 06-26-18 I	201807124733	6/29/2018	92.27
			154178826: 05-25-18 - 06-26-18	001-201-684	92.27	
01-21506	ENTERGY	147548	15484330: 05-28-18 - 06-27-18 I	201807124734	6/29/2018	6,467.03
			15484330: 05-28-18 - 06-27-18	001-100-630	6,467.03	
01-21506	ENTERGY	147549	17717240: 05-28-18 - 06-27-18 I	201807124735	6/29/2018	566.26
			17717240: 05-28-18 - 06-27-18	001-201-630	566.26	
01-21506	ENTERGY	147550	51277291: 05-28-18 - 06-27-18 I	201807124736	6/29/2018	1,068.54
			51277291: 05-28-18 - 06-27-18	001-160-630	1,068.54	
01-21506	ENTERGY	147551	64589617: 05-28-18 - 06-27-18 I	201807124737	6/29/2018	12.53
			64589617: 05-28-18 - 06-27-18	001-340-630	12.53	
01-21506	ENTERGY	147552	69877777: 05-28-18 - 06-27-18 I	201807124738	6/29/2018	7.85
			69877777: 05-28-18 - 06-27-18	001-340-630	7.85	
01-21506	ENTERGY	147553	69877793: 05-28-18 - 06-27-18 I	201807124739	6/29/2018	8.38
			69877793: 05-28-18 - 06-27-18	001-340-630	8.38	
01-21506	ENTERGY	147554	69877819: 05-28-18 - 06-27-18 I	201807124740	6/29/2018	7.85
			69877819: 05-28-18 - 06-27-18	001-340-630	7.85	
01-21506	ENTERGY	147555	86018090: 05-28-18 - 06-27-18 I	201807124741	6/29/2018	3,375.24
			86018090: 05-28-18 - 06-27-18	400-650-630	3,375.24	
01-21506	ENTERGY	147556	86296498: 05-25-18 - 06-26-18 I	201807124742	6/29/2018	19.31
			86296498: 05-25-18 - 06-26-18	400-650-630	19.31	
01-21506	ENTERGY	147557	86654423: 05-28-18 - 06-27-18 I	201807124743	6/29/2018	22.45
			86654423: 05-28-18 - 06-27-18	400-650-630	22.45	
01-21506	ENTERGY	147558	106735830: 05-26-18 - 06-28-18 I	201807124744	7/02/2018	23.06
			106735830: 05-26-18 - 06-28-18	001-201-684	23.06	

VENDOR NUMBER	NAME	DOCKET NUMBER	COMMENT	INVOICE NUMBER	INVOICE DATE	AMOUNT
01-21506	ENTERGY	147559	114576796: 05-28-18 - 06-23-18 I	201807124745	7/02/2018	40.46
			114576796: 05-28-18 - 06-23-18	001-201-684	40.46	
01-21506	ENTERGY	147560	114576804: 05-26-18 - 06-23-18 I	201807124746	7/02/2018	34.63
			114576804: 05-26-18 - 06-23-18	001-201-684	34.63	
01-21506	ENTERGY	147561	125337436: 05-29-18 - 06-28-18 I	201807124747	7/02/2018	53.63
			125337436: 05-29-18 - 06-28-18	001-201-684	53.63	
01-21506	ENTERGY	147562	129083648: 05-29-18 - 06-23-18 I	201807124748	7/02/2018	9.34
			129083648: 05-29-18 - 06-23-18	001-160-630	9.34	
01-21506	ENTERGY	147563	17853490: 05-28-18 - 06-27-18 I	201807124749	7/02/2018	1,520.42
			17853490: 05-28-18 - 06-27-18	001-340-630	1,520.42	
01-21506	ENTERGY	147564	64589682: 05-28-18 - 06-27-18 I	201807124750	7/02/2018	7.85
			64589682: 05-28-18 - 06-27-18	001-340-630	7.85	
01-21506	ENTERGY	147565	65003816: 05-29-18 - 06-28-18 I	201807124751	7/02/2018	39.17
			65003816: 05-29-18 - 06-28-18	001-201-684	39.17	
01-21506	ENTERGY	147566	67111021: 05-28-18 - 06-28-18 I	201807124752	7/02/2018	11.17
			67111021: 05-28-18 - 06-28-18	001-201-684	11.17	
01-21506	ENTERGY	147567	73076234: 05-29-18 - 06-28-18 I	201807124753	7/02/2018	48.14
			73076234: 05-29-18 - 06-28-18	001-201-684	48.14	
01-21506	ENTERGY	147568	73076317: 05-26-18 - 06-28-18 I	201807124754	7/02/2018	56.56
			73076317: 05-26-18 - 06-28-18	001-201-684	56.56	
01-21506	ENTERGY	147569	77345429: 05-29-18 - 06-28-18 I	201807124755	7/02/2018	52.71
			77345429: 05-29-18 - 06-28-18	001-201-684	52.71	
01-21506	ENTERGY	147570	97289623: 05-29-18 - 06-23-18 I	201807124756	7/02/2018	7.92
			97289623: 05-29-18 - 06-23-18	001-160-630	7.92	
01-21506	ENTERGY	147571	112618996: 05-30-18 - 06-29-18 I	201807124757	7/03/2018	76.12
			112618996: 05-30-18 - 06-29-18	001-201-684	76.12	
01-21506	ENTERGY	147572	112619010: 05-26-18 - 06-28-18 I	201807124758	7/03/2018	79.01
			112619010: 05-26-18 - 06-28-18	001-201-684	79.01	
01-21506	ENTERGY	147573	114576788: 05-29-18 - 06-28-18 I	201807124759	7/03/2018	44.18
			114576788: 05-29-18 - 06-28-18	001-201-684	44.18	
01-21506	ENTERGY	147574	114576812: 05-29-18 - 06-28-18 I	201807124760	7/03/2018	44.29
			114576812: 05-29-18 - 06-28-18	001-201-684	44.29	
01-21506	ENTERGY	147575	125333245: 05-30-18 - 06-29-18 I	201807124761	7/03/2018	39.99
			125333245: 05-30-18 - 06-29-18	001-201-684	39.99	

VENDOR NUMBER	NAME	DOCKET NUMBER	COMMENT	INVOICE NUMBER	DATE	AMOUNT
01-21506	ENTERGY	147576	125333369: 05-28-18 - 06-29-18	I 201807124762	7/03/2018	22.26
			125333369: 05-28-18 - 06-29-18	001-201-684	22.26	
01-21506	ENTERGY	147577	125333385: 05-28-18 - 06-29-18	I 201807124763	7/03/2018	22.48
			125333385: 05-28-18 - 06-29-18	001-201-684	22.48	
01-21506	ENTERGY	147578	125337220: 05-29-18 - 06-28-18	I 201807124764	7/03/2018	68.21
			125337220: 05-29-18 - 06-28-18	001-201-684	68.21	
01-21506	ENTERGY	147579	125337451: 05-29-18 - 06-28-18	I 201807124765	7/03/2018	41.73
			125337451: 05-29-18 - 06-28-18	001-201-684	41.73	
01-21506	ENTERGY	147580	64563828: 05-30-18 - 06-28-18	I 201807124766	7/03/2018	46.87
			64563828: 05-30-18 - 06-28-18	001-201-684	46.87	
01-21506	ENTERGY	147581	97880801: 05-29-18 - 06-28-18	I 201807124767	7/03/2018	56.89
			97880801: 05-29-18 - 06-28-18	001-201-684	56.89	
01-21506	ENTERGY	147582	112618939: 05-30-18 - 06-28-18	I 201807124768	7/05/2018	48.35
			112618939: 05-30-18 - 06-28-18	001-201-684	48.35	
01-21506	ENTERGY	147583	112618988: 05-31-18 - 07-02-18	I 201807124769	7/05/2018	70.43
			112618988: 05-31-18 - 07-02-18	001-201-684	70.43	
01-21506	ENTERGY	147584	18014480: 05-30-18 - 06-28-18	I 201807124770	7/05/2018	34.84
			18014480: 05-30-18 - 06-28-18	001-340-630	34.84	
01-21506	ENTERGY	147585	19579978: 05-30-18 - 07-02-18	I 201807124771	7/05/2018	7.33
			19579978: 05-30-18 - 07-02-18	001-340-630	7.33	
01-21506	ENTERGY	147586	67890202: 05-31-18 - 06-29-18	I 201807124772	7/05/2018	71.60
			67890202: 05-31-18 - 06-29-18	001-201-684	71.60	
01-21506	ENTERGY	147587	77233922: 05-30-18 - 07-02-18	I 201807124773	7/05/2018	7.67
			77233922: 05-30-18 - 07-02-18	001-201-630	7.67	
01-21506	ENTERGY	147588	95283941: 05-31-18 - 07-02-18	I 201807124774	7/05/2018	68.34
			95283941: 05-31-18 - 07-02-18	001-201-684	68.34	
01-21506	ENTERGY	147589	68325224: 05-29-18 - 06-28-18	I 201807124775	7/06/2018	440.73
			68325224: 05-29-18 - 06-28-18	001-201-684	440.73	
01-21506	ENTERGY	147590	111753950: 06-06-18 - 07-05-18	I 201807124776	7/11/2018	254.45
			111753950: 06-06-18 - 07-05-18	001-201-684	254.45	
01-02231	EWING IRRIGATION PRODUCTS	147591	IRRIGATION HEADS	I 5646476	6/23/2018	141.60
			IRRIGATION HEADS	001-340-575	141.60	
01-23490	FOLIAGE DESIGN SYSTEMS	147592	PLANT MAINTENANCE	I 946659	7/01/2018	167.50
			PLANT MAINTENANCE	001-100-604	167.50	

VENDOR NUMBER	NAME	DOCKET NUMBER	COMMENT	INVOICE NUMBER	DATE	AMOUNT
01-24500	FUELMAN OF MS-#127779	147593	127779; 06-25-18 - 07-01-18	I NP53660701	7/02/2018	129.67
			127779; 06-25-18 - 07-01-18	001-020-525	41.90	
			127779; 06-25-18 - 07-01-18	001-092-525	87.77	
01-01867	FUELMAN OF MS-#127780	147594	127780; 06-25-18 - 07-01-18	I NP53660702	7/02/2018	2,357.99
			127780; 06-25-18 - 07-01-18	001-201-525	1,124.56	
			127780; 06-25-18 - 07-01-18	400-650-525	1,136.23	
			127780; 06-25-18 - 07-01-18	404-650-525	97.20	
01-01867	FUELMAN OF MS-#127780	147595	127780; 07-02-18 - 07-08-18	I NP53725734	7/09/2018	1,077.88
			127780; 07-02-18 - 07-08-18	001-201-525	426.31	
			127780; 07-02-18 - 07-08-18	400-650-525	651.57	
01-01868	FUELMAN OF MS-#127781	147596	127781; 06-25-18 - 07-01-18	I NP53660703	7/02/2018	577.53
			127781; 06-25-18 - 07-01-18	001-160-525	577.53	
01-01868	FUELMAN OF MS-#127781	147597	127781; 07-02-18 - 07-08-18	I NP53725735	7/09/2018	522.45
			127781; 07-02-18 - 07-08-18	001-160-525	522.45	
01-01869	FUELMAN OF MS-#127782	147598	127782; 06-25-18 - 07-01-18	I NP53660704	7/02/2018	160.61
			127782; 06-25-18 - 07-01-18	001-180-525	160.61	
01-01869	FUELMAN OF MS-#127782	147599	127782; 07-02-18 - 07-08-18	I NP53725736	7/09/2018	32.58
			127782; 07-02-18 - 07-08-18	001-180-525	32.58	
01-01870	FUELMAN OF MS-#127783	147600	127783; 06-25-18 - 07-01-18	I NP53660705	7/02/2018	3,631.62
			127783; 06-25-18 - 07-01-18	001-100-525	3,631.62	
01-01870	FUELMAN OF MS-#127783	147601	127783: 07-02-18 - 07-08-18	I NP53725737	7/09/2018	2,736.46
			127783: 07-02-18 - 07-08-18	001-100-525	2,736.46	
01-01871	FUELMAN OF MS-#127785	147602	127785; 06-25-18 - 07-01-18	I NP53660706	7/02/2018	426.02
			127785; 06-25-18 - 07-01-18	001-340-525	426.02	
01-24935	GATEWAY TIRE & SERVICE CE	147603	TIRES	I IA02137513	6/27/2018	689.84
			TIRES	001-340-632	623.84	
			MOUNT/BALANCE	001-340-632	40.00	
			NITROGEN FILL	001-340-632	10.00	
			TIRE DISPOSAL	001-340-632	12.00	
			TIRE TAX	001-340-632	4.00	
01-24935	GATEWAY TIRE & SERVICE CE	147604	MOUNT/BALANCE P326 TIRES	I IA02137805	6/27/2018	66.00
			MOUNT/BALANCE P326 TIRES	001-100-632	66.00	
01-24935	GATEWAY TIRE & SERVICE CE	147605	VALVE STEM	I IA02139776	6/29/2018	56.94
			LARGE REAR FLAT	001-340-632	25.00	
			SMALL REAR FLAT	001-340-632	15.00	
			GATEWAY TUBE	001-340-632	16.94	
01-00644	GREEN EARTH PRODUCTS	147606	SHOP TOWEL AND OIL DRY	I 41451	7/05/2018	703.46
			SHOP TOWELS	400-650-540	328.76	

VENDOR NUMBER	NAME	DOCKET NUMBER	COMMENT	INVOICE NUMBER	DATE	AMOUNT	
01-00644	GREEN EARTH PRODUCTS	147606	SHOP TOWEL AND OIL DRY	I 41451	7/05/2018	703.46	CONT
			OIL DRY	400-650-540	374.70		
01-02977	GRINER DRILLING SERVICE,	147607	REINSTALL MOTOR	I 5180602	6/11/2018	520.00	
			REINSTALL MOTOR	400-650-603	520.00		
01-02977	GRINER DRILLING SERVICE,	147608	REINSTALL MOTOR	I 5180625	6/29/2018	825.00	
			REINSTALL MOTOR	400-650-603	575.00		
			SHAFT	400-650-603	250.00		
01-27765	HARCROS CHEMICALS INC	147609	1 TON CHLORINE	I 770107038	6/26/2018	600.00	
			1 TON CHLORINE	400-650-575	600.00		
01-27765	HARCROS CHEMICALS INC	147610	1 TON CHLORINE	I 770107039	6/26/2018	600.00	
			1 TON CHLORINE	400-650-575	600.00		
01-27765	HARCROS CHEMICALS INC	147611	150lb CHLORINE	I 770107094	6/28/2018	1,170.00	
			150lb CHLORINE	400-650-575	1,170.00		
01-27950	HARLEY-DAVIDSON OF CENTRA	147612	HD-2017A FRONT TIRE	I 37628	6/26/2018	322.70	
			HD-2017A FRONT TIRE	001-100-632	241.95		
			WHEEL WEIGHTS	001-100-632	2.25		
			LABOR	001-100-632	75.00		
			EPA DISPOSAL	001-100-632	3.50		
01-02680	HIGHLAND BUILDING SERVICE	147613	CLEANING	I 2285	7/01/2018	790.00	
			CLEANING	001-340-604	640.00		
			EXTRA CLEANING	001-340-604	150.00		
01-32675	INTERSTATE BATTERY SYSTEM	147614	P309 BATTERY	I 689902	6/25/2018	89.62	
			MTP 49/H8	001-100-632	89.62		
01-32675	INTERSTATE BATTERY SYSTEM	147615	31-MHD BATTERY	I 689922	6/25/2018	229.90	
			31-MHD BATTERY	001-201-632	229.90		
01-32675	INTERSTATE BATTERY SYSTEM	147616	P346 BATTERY	I 689940	6/27/2018	133.90	
			MTP BATTERY	001-100-632	117.95		
			BATTERY INSTALL	001-100-632	15.95		
01-04057	ITSAVVY	147617	MOPHIE CASE	I 01035165	6/06/2018	82.65	
			MOPHIE CASE	001-042-501	65.62		
			SCREEN PROTECTOR	001-042-501	17.03		
01-04057	ITSAVVY	147618	REPLACEMENT UPS	I 01037211	6/14/2018	1,068.52	
			REPALCEMENT UPS	005-101-730	997.12		
			PDU BASIC	005-101-730	71.40		
01-04057	ITSAVVY	147619	REPLACEMENT UPS	I 01037742	6/18/2018	720.95	
			BATTERY MODULE	005-101-730	446.60		
			5 YEAR WARRANTY	005-101-730	274.35		
01-02458	JACKSON ICE CO	147620	ICE	I 5886446	6/28/2018	475.00	

VENDOR NUMBER	NAME	DOCKET NUMBER	COMMENT	INVOICE NUMBER	DATE	AMOUNT	
01-02458	JACKSON ICE CO	147620	ICE	I 5886446	6/28/2018	475.00	CONT
			ICE	001-340-650	475.00		
01-33800	JACKSON PAPER COMPANY	147621	JANITORIAL/CID SUPPLY	I 1069905	6/13/2018	169.52	
			ENMOTION TOWELS	001-100-510	144.00		
			FOAM CUPS	001-100-540	25.52		
01-33800	JACKSON PAPER COMPANY	147622	JANITORIAL/CID SUPPLY	I 1070563	6/18/2018	164.90	
			LG NITRILE GLOVES	001-100-540	164.90		
01-33800	JACKSON PAPER COMPANY	147623	JANITORIAL SUPPLIES	I 1071627	6/22/2018	166.00	
			ENMOTION PAPERTOWELS	001-092-510	96.00		
			24x33 CAN LINERS	001-092-510	36.51		
			38x58 CAN LINERS	001-092-510	22.45		
			STICK MOP	001-092-510	11.04		
01-33800	JACKSON PAPER COMPANY	147624	JANITORIAL SUPPLIES	I 1071916	6/26/2018	9.62	
			VINYL GLOVES 100 CT	001-092-510	9.62		
01-33800	JACKSON PAPER COMPANY	147625	JANITORIAL SUPPLIES	I 1072434	6/28/2018	223.44	
			43x48 CAN LINERS	001-350-510	80.28		
			TORK J TOILET TISSUE	001-350-510	47.16		
			ENMOTION TLSS TOWELS	001-350-510	96.00		
01-33875	JACKSON POWERTRAIN INC	147626	U JOINTS	I 96115	6/26/2018	189.30	
			U JOINTS	001-201-632	189.30		
01-02267	JACKSON-HIRSH, INC	147627	FD-LAMINATING POUCHES	I 0991779	6/28/2018	268.54	
			LAMINATING POUCHES	001-160-540	111.00		
			LAMINATING TAGS	001-160-540	135.00		
			SHIPPING	001-160-540	22.54		
01-03188	LADD'S	147628	PULL BEHIND BLOWER	I 01-104320	6/25/2018	7,151.60	
			PULL BEHIND BLOWER	001-201-730	7,151.60		
01-05344	LAKELAND GLASS AND TINT	147629	WINDSHIELD REPLACEMENT	I 21867	6/26/2018	200.00	
			WINDSHIELD P331	001-100-632	200.00		
01-38850	LOVE IRRIGATION INC	147630	VALVE REBUILD KIT	I S-54229	6/27/2018	194.46	
			SPRINKLER HEAD VALVE	400-650-575	194.46		
01-02031	LOWE'S BUSINESS ACCOUNT	147631	TAX CORRECTION REFUND	C 18387	6/29/2018	1.33CR	
			TAX CORRECTION REFUND	001-092-540	1.33CR		
01-02031	LOWE'S BUSINESS ACCOUNT	147632	FENCING	I 02718	6/26/2018	204.96	
			FENCING	001-340-540	204.96		
01-02031	LOWE'S BUSINESS ACCOUNT	147633	JOINT COMPOUND-GOOF OFF	I 14994	6/27/2018	30.52	
			FLOOR GLUE REMOVER	001-010-540	25.09		
			JOINT COMPOUND	001-100-540	5.43		
01-02031	LOWE'S BUSINESS ACCOUNT	147634	FD-AIR HOSE	I 23550	7/03/2018	47.47	

VENDOR NUMBER	NAME	DOCKET NUMBER	COMMENT	INVOICE NUMBER	DATE	AMOUNT	
01-02031	LOWE'S BUSINESS ACCOUNT	147634	FD-AIR HOSE	I 23550	7/03/2018	47.47	CONT
			FEMALE COUPLER	001-160-540	4.74		
			PLUG & COUPLER KIT	001-160-540	14.24		
			HOSE	001-160-540	28.49		
01-02031	LOWE'S BUSINESS ACCOUNT	147635	LASER LEVEL	I 23669	6/29/2018	20.32	
			LASER LEVEL	001-092-540	20.32		
01-05221	LYNN, RANDALL	147636	JULY 10, 2018 MEETING	I 071018	7/10/2018	50.00	
			JULY 10, 2018 MEETING	001-180-611	50.00		
01-39300	M A G P P A	147637	FD - CONFERENCE	I 1529958209199	6/25/2018	160.00	
			REGISTRATION FEE	001-160-681	160.00		
01-39300	M A G P P A	147638	CONFERENCE FEE	I 1530041657501	6/26/2018	160.00	
			CONFRERENCE FEE	400-650-681	160.00		
01-39300	M A G P P A	147639	CONFERENCE FEE	I 1530041847126	6/26/2018	160.00	
			CONFRERENCE FEE	400-650-681	160.00		
01-39300	M A G P P A	147640	CONFERENCE REGISTRATION	I 1530628067452	7/03/2018	160.00	
			CONFERENCE REGISTRATION	001-040-681	160.00		
01-02372	MAC'S FRESH MARKET	147641	CWC LUNCH	I 201807024662	5/31/2018	394.89	
			CWC LUNCH	001-201-540	390.15		
			DRINKS	001-201-540	4.74		
01-41000	MADISON COUNTY JOURNAL	147642	ZONING HEARING-J MEARS-THE RES	I 300059453	6/30/2018	121.56	
			ZONING HEARING-J MEARS-THE RES	001-180-615	121.56		
01-01078	MADISON COUNTY WASTEWATER	147643	ADM ASSESSMENT: JULY 2018	I 3377	7/01/2018	3,450.00	
			ADM ASSESSMENT: JULY 2018	400-650-604	3,450.00		
01-01078	MADISON COUNTY WASTEWATER	147644	SRF LOAN: AUG 2018	I 3381	7/01/2018	1,409.79	
			SRF LOAN: AUG 2018	400-650-842	1,409.79		
01-01078	MADISON COUNTY WASTEWATER	147645	PARKWAY EAST: AUG 2018	I 3388	7/01/2018	2,021.54	
			PARKWAY EAST: AUG 2018	400-650-845	2,021.54		
01-01078	MADISON COUNTY WASTEWATER	147646	BOZEMAN & OLD CANTON:AUG 2018	I 3391	7/01/2018	1,832.14	
			BOZEMAN & OLD CANTON:AUG 2018	400-650-848	1,832.14		
01-01078	MADISON COUNTY WASTEWATER	147647	TRUSTMARK LOAN: AUG 2018	I 3398	7/01/2018	5,809.84	
			TRUSTMARK LOAN: AUG 2018	400-650-846	5,809.84		
01-05253	MAGEE-PRAYTOR, LYNETTE	147648	JULY 10, 2018 MEETING	I 071018	7/10/2018	50.00	
			JULY 10, 2018 MEETING	001-180-611	50.00		
01-42310	MARS MARKETING PROMOTIONA	147649	WRISTBANDS	I 35436	6/26/2018	140.78	
			WRISTBANDS	001-340-650	89.00		
			RESET	001-340-650	35.00		
			SHIPPING	001-340-650	16.78		

VENDOR NUMBER	NAME	DOCKET NUMBER	COMMENT	INVOICE NUMBER	DATE	AMOUNT
01-42882	MCGRAW GOTTA-GO	147650	TOILETS	I 18381B	6/29/2018	4,225.00
			TOILETS	001-340-650	1,875.00	
			DELUXE RESTROOM TRAI	001-340-650	1,200.00	
			DELIVERY RESTROOM TR	001-340-650	150.00	
			HADICAP UNIT WITH BA	001-340-650	175.00	
			HAND WASH STATIONS	001-340-650	375.00	
			DELIVERY	001-340-650	450.00	
01-00837	MISS CHEMICAL SUPPLY INC	147651	ORANGE ASPHALT CLEANER	I 35071	6/25/2018	3,298.90
			ORANGE ASPHALT CLEANER	001-201-540	3,298.90	
01-00837	MISS CHEMICAL SUPPLY INC	147652	MOSQUITO SPRAY	I 35076	7/02/2018	4,025.00
			MOSQUITO SPRAY	001-201-575	4,025.00	
01-04591	MISS DEPARTMENT OF PUBLIC	147653	JUNE 2018	I 201807124777	7/09/2018	2,154.96
			JUNE 2018	001-000-118	2,154.96	
01-00953	MISS INDUSTRIES FOR THE B	147654	OFFICE SUPPLIES	I 0035443	6/26/2018	10.56
			PEN HOLDER	001-040-500	2.59	
			ADHESIVE PEN HOLDER	001-040-500	1.98	
			PANEL WALL HOOKS	001-040-500	5.99	
01-47890	MISS TENT AND PARTY RENTA	147655	TENT & CHAIRS	I 103614	7/05/2018	2,598.00
			POLE TENT	001-340-650	1,237.50	
			FRAME TENT	001-340-650	275.00	
			8FT BANQUET TABLE	001-340-650	450.00	
			BLACK FOLDING CHAIRS	001-340-650	462.50	
			DELIVERY	001-340-650	50.00	
			PICKUP	001-340-650	50.00	
			DAMAGE WAIVER	001-340-650	73.00	
01-47950	MISS VALLEY ELECTRIC SUPP	147656	LIGHT SUPPLIES	I S1298774.003	7/05/2018	865.49
			RECEPTICAL	400-650-540	2.00	
			W WAY RECEPTCAL	400-650-540	17.00	
			GFI RECEPTICAL	400-650-540	3.26	
			GANG BOX	400-650-540	14.00	
			CONNECTOR	400-650-540	2.86	
			PIPE	400-650-540	3.62	
			BULB	400-650-540	22.00	
			BULB	400-650-540	116.00	
			BALLIS	400-650-540	440.00	
			BULB	400-650-540	48.00	
			BULB	400-650-540	80.00	
			CONNECTOR	400-650-540	36.00	
			CONNECTOR	400-650-540	22.00	
			SEALTITE	400-650-540	58.75	
01-01061	MOONJUMP OF MADISON	147657	FD-FAFK	I 201807094665	6/27/2018	450.00
			SLIDE RENTAL	001-160-692	450.00	
01-05432	ROBERT MOORE	147658	JULY 10, 2018 MEETING	I 071018	7/10/2018	50.00

VENDOR NUMBER	NAME	DOCKET NUMBER	COMMENT	INVOICE NUMBER	DATE	AMOUNT	
01-05432	ROBERT MOORE	147658	JULY 10, 2018 MEETING	I 071018	7/10/2018	50.00	CONT
			JULY 10, 2018 MEETING	001-180-611	50.00		
01-05425	MORGAN, TAYLOR	147659	JULY 10, 2018 MEETING	I 071018	7/10/2018	50.00	
			JULY 10, 2018 MEETING	001-180-611	50.00		
01-53160	NORTHERN TOOL & EQUIPMENT	147660	TRUCK BOX	I 6402067534	6/21/2018	249.99	
			TRUCK BOX	001-201-540	249.99		
01-53350	NORTHSIDE SUN	147661	1/2 PAGE AD	I 201807094666	6/29/2018	700.00	
			1/2 PAGE AD	001-093-615	700.00		
01-01133	O'REILLY AUTO PARTS	147662	MINI FUSES FOR CHARGER AC	I 219585	6/26/2018	13.96	
			10A FUSES	001-100-632	2.99		
			15A FUSES	001-100-632	2.99		
			20A FUSES	001-100-632	2.99		
			ASSORTMENT FUSES	001-100-632	4.99		
01-01133	O'REILLY AUTO PARTS	147663	FD-SUPPLIES	I 219810	6/28/2018	125.95	
			LITHIUM GREASE	001-160-540	13.98		
			RECEIVER LOCK	001-160-540	26.99		
			RATCHET	001-160-540	34.99		
			BOOSTER CABLE	001-160-540	49.99		
01-53600	OFFICE DEPOT INC	147664	SUPPLIES	I 2201865197	6/28/2018	23.97	
			BINDER COMBS 1/4"	400-650-500	9.99		
			BINDER COMBS 5/8"	400-650-500	7.99		
			BINDER COMBS 3/8"	400-650-500	5.99		
01-53715	OFFICE PRODUCTS PLUS INC	147665	CLASP ENVELOPES	I 832922-0	6/12/2018	19.50	
			CLASP ENVELOPES	001-100-500	19.50		
01-53715	OFFICE PRODUCTS PLUS INC	147666	LETTER SIZE FOLDERS	I 834880-0	6/29/2018	84.05	
			LETTER SIZE FOLDERS	001-180-500	82.04		
			ERASERS	001-180-500	2.01		
01-53715	OFFICE PRODUCTS PLUS INC	147667	LETTER SIZE FOLDERS	I 834880-1	7/02/2018	18.80	
			MECHANICAL PENCIL	001-180-500	18.80		
01-53715	OFFICE PRODUCTS PLUS INC	147668	FD-SUPPLIES	I 835239-0	7/05/2018	89.29	
			1/2" BINDERS	001-160-500	23.04		
			SHARPIES	001-160-500	10.50		
			1 1/2" BOOK RINGS	001-160-500	34.67		
			1" BOOK RINGS	001-160-500	21.08		
01-55060	PEARL RIVER VALLEY WATER	147669	90400: 05-21-18 - 06-21-18	I 201807124778	6/29/2018	167.87	
			90400: 05-21-18 - 06-21-18	001-340-630	167.87		
01-04399	PITNEY BOWES GLOBAL FINAN	147670	05-01-18 - 07-31-18 LEASE	I 3306623430	7/03/2018	418.77	
			05-01-18 - 07-31-18 LEASE	001-040-635	418.77		
01-03279	PNC EQUIPMENT FINANCE	147671	COMMERCIAL LEASE EQUIPMENT	I 111397	7/06/2018	4,333.53	

VENDOR NUMBER	NAME	DOCKET NUMBER	COMMENT	INVOICE NUMBER	DATE	AMOUNT	
01-03279	PNC EQUIPMENT FINANCE	147671	COMMERCIAL LEASE EQUIPMENT	I 111397	7/06/2018	4,333.53	CONT
			COMMERCIAL LEASE EQUIPMENT	001-340-604	4,333.53		
01-56700	POLK DECORATIVE CENTER	147672	OVERPAYMENT-PRIVILEGE LICENSE	I 201807114685	6/29/2018	30.00	
			OVERPAYMENT-PRIVILEGE LICENSE	001-000-351	30.00		
01-57350	PRASSEL LUMBER COMPANY IN	147673	STRAPS	I 874194	6/27/2018	195.42	
			RATCHET STRAPS	001-340-540	195.42		
01-57350	PRASSEL LUMBER COMPANY IN	147674	PORLAND CEMENT	I 874868	7/05/2018	496.00	
			PORLAND CEMENT	001-201-540	496.00		
01-57400	PRECISION CAR AUDIO	147675	OVERPAYMENT- PRIVILEGE LICENSE	I 201807114680	6/25/2018	25.00	
			OVERPAYMENT- PRIVILEGE LICENSE	001-000-351	25.00		
01-58325	PUBLIC AGENCY TRAINING CO	147676	EVIDENCE CUST. TRAINING	I 230514	6/13/2018	295.00	
			J. WATKINS TRAINING	001-100-681	295.00		
01-58550	QUALITY CHEMICAL & SUPPLY	147677	FD-STATION 4	I 181760	6/26/2018	137.97	
			CENTER PULL TOWELS	001-160-510	76.62		
			STRAIGHT UP	001-160-510	61.35		
01-58550	QUALITY CHEMICAL & SUPPLY	147678	FD-STATION 3	I 181761	6/26/2018	63.27	
			HURRICAN	001-160-510	33.96		
			PAPER TOWELS	001-160-510	29.31		
01-58550	QUALITY CHEMICAL & SUPPLY	147679	FD-CENTRAL STATION	I 181762	6/26/2018	180.51	
			PAPER TOWELS	001-160-510	146.55		
			HURRICAN	001-160-510	33.96		
01-58550	QUALITY CHEMICAL & SUPPLY	147680	NEUTRAL DIS. CLEANER	I 181841	6/29/2018	189.50	
			NEUTRAL DIS. CLEANER	001-100-510	97.32		
			PH NEUTRAL CLEANER	001-100-510	92.18		
01-05349	RETAIL MAINTENANCE SOLUTI	147681	FD-STATION 3 CEILINGS	I 1832	6/13/2018	3,920.00	
			PAINT CEILING GRID	001-160-637	720.00		
			PAINT ABOVE GRID	001-160-637	3,200.00		
01-03894	RICHARDSON ATHLETICS LLC	147682	FENCING	I 28172	6/26/2018	20,358.40	
			SPORTPANEL BLACK FEN	001-340-730	21,598.40		
			SALES DISCOUNT	001-340-730	3,840.00CR		
			FREIGHT	001-340-730	2,600.00		
01-60825	RICK'S PRO TRUCK & AUTO A	147683	BED MAT	I 323458	6/28/2018	99.95	
			BED MAT	400-650-540	99.95		
01-04133	RIDGETOWNE ANIMAL HOSPITA	147684	NEXTGUARD FOR BIKKEL	I 201807094663	7/09/2018	146.12	
			NEXTGUARD FOR BIKKEL	001-100-604	146.12		
01-04133	RIDGETOWNE ANIMAL HOSPITA	147685	BIKKEL JOINT MEDS	I 201807094664	6/27/2018	70.95	
			BIKKEL JOINT MEDS	001-100-604	70.95		

VENDOR NUMBER	NAME	DOCKET NUMBER	COMMENT	INVOICE NUMBER	DATE	AMOUNT
01-02496	RJ YOUNG COMPANY	147686	CANON DR-M160II SCANNER	I INV2501703	5/25/2018	969.00
			CANON DR-M160II SCANNER	005-101-730	969.00	
01-04854	SITEONE LANDSCAPE SUPPLY	147687	SPRINKLER HEAD	I 86706064	6/26/2018	37.91
			SPRINKLER HEAD	400-650-540	37.91	
01-00252	SKILL PATH SEMINARS	147688	MANAGEMENT COURSE	I 11797008	5/03/2018	299.00
			MGR COURSE WILLIAMS	001-100-681	299.00	
01-00252	SKILL PATH SEMINARS	147689	MANAGEMENT COURSE	I 11797009	5/03/2018	299.00
			MGR COURSE MCDANIELS	001-100-681	299.00	
01-05099	SOUTHERN BILLING SERVICES	147690	07-01-18 - 07-31-18 SERVICES	I 2838	7/05/2018	785.18
			07-01-18 - 07-31-18 SERVICES	001-020-605	112.17	
			07-01-18 - 07-31-18 SERVICES	001-040-605	205.64	
			07-01-18 - 07-31-18 SERVICES	001-180-605	149.56	
			07-01-18 - 07-31-18 SERVICES	001-201-605	56.08	
			07-01-18 - 07-31-18 SERVICES	001-340-605	130.86	
			07-01-18 - 07-31-18 SERVICES	400-650-605	130.87	
01-05099	SOUTHERN BILLING SERVICES	147691	07-01-18 - 07-31-18 SERVICES	I 2839	7/05/2018	895.74
			07-01-18 - 07-31-18 SERVICES	001-100-605	804.34	
			07-01-18 - 07-31-18 SERVICES	001-160-605	91.40	
01-04508	BC LANDSCAPE AND LAWN SER	147692	CENTIPEDE SOD	I 033335	6/25/2018	453.00
			CENTIPEDE SOD	400-650-575	453.00	
01-03627	SOUTHERN TELECOMMUNICATIO	147693	ACCT 2361: 6018538610	I 201807124779	6/28/2018	1,420.94
			ACCT 2361: 6018538610	001-020-605	0.00	
			ACCT 2361: 6018538610	001-040-605	72.97	
			ACCT 2361: 6018538610	001-100-605	240.60	
			ACCT 2361: 6018538610	001-160-605	452.43	
			ACCT 2361: 6018538610	001-180-605	0.00	
			ACCT 2361: 6018538610	001-201-605	63.77	
			ACCT 2361: 6018538610	001-340-605	202.95	
			ACCT 2361: 6018538610	001-350-605	165.04	
			ACCT 2361: 6018538610	400-650-605	223.18	
01-66850	SOUTHERN TIRE MART INC	147694	FD-LADDER 4	I 15399787	6/27/2018	713.45
			AFTER HOURS SVC CALL	001-160-632	220.00	
			FUEL SURCHARGE	001-160-632	17.50	
			VALVE STEM	001-160-632	6.95	
			TIRE DISPOSAL FEE	001-160-632	10.00	
			TIRE	001-160-632	457.00	
			REIMB. WASTE TIRE FE	001-160-632	2.00	
			FET	001-160-632	52.83	
			FETBGOV	001-160-632	52.83CR	
01-66850	SOUTHERN TIRE MART INC	147695	FD-ENGINE 3	I 15400840	6/28/2018	847.88
			TIRE	001-160-632	475.00	
			FET	001-160-632	61.43	

VENDOR NUMBER	NAME	DOCKET NUMBER	COMMENT	INVOICE NUMBER	DATE	AMOUNT	
01-66850	SOUTHERN TIRE MART INC	147695	FD-ENGINE 3	I 15400840	6/28/2018	847.88	CONT
			REIMB OF WASTE TIRE	001-160-632	2.00		
			AFTER HOURS FEE	001-160-632	275.00		
			FUEL SURCHARGE	001-160-632	17.50		
			VALVE STEM	001-160-632	6.95		
			TIRE DISPOSAL	001-160-632	10.00		
01-66850	SOUTHERN TIRE MART INC	147696	FD-ENGINE 2	I 15401003	6/29/2018	460.70	
			SERVICE CALL	001-160-632	40.00		
			FUEL SURCHARGE	001-160-632	17.50		
			TIRE CHANGE	001-160-632	30.00		
			TIRE DISPOSAL FEE	001-160-632	10.00		
			VALVE STEM	001-160-632	6.95		
			TIRE	001-160-632	354.25		
			FET	001-160-632	25.23		
			REIMB WASTE TIRE FEE	001-160-632	2.00		
			FET GOV	001-160-632	25.23CR		
01-68200	STATE TREASURER	147697	JUNE 2018	I 201807124780	7/09/2018	78,864.05	
			JUNE 2018	001-000-107	824.27		
			JUNE 2018	001-000-113	8,432.74		
			JUNE 2018	001-000-114	280.00		
			JUNE 2018	001-000-227	0.00		
			JUNE 2018	001-000-332	68,898.05		
			JUNE 2018	001-000-116	382.25		
			JUNE 2018	001-000-117	46.74		
			JUNE 2018	001-000-335	0.00		
01-68250	STATE TREASURER FUND: 337	147698	JUNE 2018 ANALYTICAL FEES	I 90068915	7/02/2018	780.00	
			JUNE 2018 ANALYTICAL FEES	001-100-604	780.00		
01-68950	SUBER, CONNIE	147699	JULY 10, 2018 MEETING	I 071018	7/10/2018	50.00	
			JULY 10, 2018 MEETING	001-180-611	50.00		
01-69095	SULLIVAN ELECTRIC	147700	REPAIR LIGHTS & CRANE	I 137125	7/05/2018	1,080.00	
			REPAIR LIGHTS & CRANE	400-650-603	1,080.00		
01-69095	SULLIVAN ELECTRIC	147701	SERVICE ORDERS	I 137126	7/09/2018	3,510.00	
			FRP LAMP/TRAIL	001-340-637	1,530.00		
			TENNIS CENTER	001-340-637	630.00		
			WOLCOTT PARK	001-340-637	810.00		
			FRIENDSHIP PARK	001-340-637	540.00		
01-69740	SYSCO FOOD SERVICES OF JA	147702	ICE CREAM	I 181443741	6/28/2018	825.35	
			FUDGE BAR	001-340-650	34.90		
			NUTT BAR	001-340-650	75.75		
			CHOCOLATE CUP	001-340-650	42.70		
			VANILLA CONE	001-340-650	113.40		
			ICE CREAM SANDWICH	001-340-650	100.60		
			TURTLE SUNDAE	001-340-650	139.80		
			VANILLA CUP	001-340-650	40.80		
			ORANGE SHERBERT	001-340-650	147.00		

VENDOR NUMBER	NAME	DOCKET NUMBER	COMMENT	INVOICE NUMBER	DATE	AMOUNT	
01-69740	SYSCO FOOD SERVICES OF JA	147702	ICE CREAM	I 181443741	6/28/2018	825.35	CONT
			SHIPPING	001-340-650	125.70		
			FUEL	001-340-650	4.70		
01-69790	T S C INC	147703	BANNER	I 19468-1	6/29/2018	150.00	
			BANNER	001-340-650	150.00		
01-03419	THINKWEBSTORE.COM	147704	JULY 2018	I 5775	7/05/2018	800.00	
			JULY 2018	001-093-604	800.00		
01-02035	TIERCE, PAULA	147705	ADV TRAV: 08-08-18 - 08-10-18	I 201807124781	7/12/2018	342.01	
			ADV TRAV: 08-08-18 - 08-10-18	001-080-610	342.01		
01-05002	TOMMY COZIAR SIGNS	147706	SIGNS	I 201807104670	6/25/2018	434.00	
			WHITE VINYL NUMBERS	001-340-637	30.00		
			LITTER DECALS	001-340-637	200.00		
			CHILDREN AT PLAY	001-340-637	32.00		
			CHILDREN AT PLAY	001-340-637	32.00		
			DIRECTIONAL VINYL	001-340-637	140.00		
01-02437	TOSHIBA FINANCIAL SERVICE	147707	PRINTER FEE	I 22895224	6/25/2018	266.77	
			PRINTER FEE	001-340-604	266.77		
01-02131	TOTAL CONTROL TRAINING IN	147708	FIRE ARM INSTR. RECERT.	I 180507	7/05/2018	300.00	
			FIRE ARM INSTR. RECERT.	001-100-681	300.00		
01-04746	TRANE U.S. INC	147709	OVERPAYMENT-PRIVILEGE LICENSE	I 201807114684	6/29/2018	87.00	
			OVERPAYMENT-PRIVILEGE LICENSE	001-000-351	87.00		
01-04418	TRANSUNION RISK AND ALTER	147710	ACCT 44061: JUNE 2018	I 201807124782	7/01/2018	209.00	
			ACCT 44061: JUNE 2018	001-100-604	209.00		
01-04160	KC EXPRESS LLC	147711	JUNE 2018 SERVICES	I 3323	7/02/2018	385.00	
			JUNE 2018 SERVICES	001-340-604	385.00		
01-02393	TYLER TECHNOLOGIES	147712	INSITE TRANSACTION FEES	I 025-228713	6/30/2018	3,073.00	
			INSITE TRANSACTION FEES	400-650-604	3,073.00		
01-02393	TYLER TECHNOLOGIES	147713	UTILITY BILLING NOTIFICATION	I 025-228976	6/30/2018	124.70	
			UTILITY BILLING NOTIFICATION	400-650-604	124.70		
01-00544	U.S. LAWNS OF JACKSON	147714	LAWN SERVICE	I 39124	7/01/2018	499.00	
			LAWN SERVICE JULY	001-100-637	499.00		
01-00544	U.S. LAWNS OF JACKSON	147715	LANDSCAPE MAINTENANCE	I 39175	7/01/2018	8,165.84	
			LANDSCAPE MAINTENANCE	001-340-604	8,165.84		
01-00544	U.S. LAWNS OF JACKSON	147716	MONTHLY LANDSCAPTING	I 39176	7/01/2018	200.00	
			CITY SIGN	001-201-604	200.00		
01-00544	U.S. LAWNS OF JACKSON	147717	HARBOR DRIVE	I 39177	7/01/2018	1,017.18	
			HARBOR DRIVE	001-201-604	1,017.18		

VENDOR NUMBER	NAME	DOCKET NUMBER	COMMENT	INVOICE NUMBER	INVOICE DATE	AMOUNT
01-00544	U.S. LAWNS OF JACKSON	147718	MONTHLY LANDSCAPTING	I 39178	7/01/2018	3,599.00
			JESSAMINE CEMETERY	001-201-604	1,100.00	
			SPILLWAY ROAD	001-201-604	2,499.00	
01-00544	U.S. LAWNS OF JACKSON	147719	COUNTY LINE ROAD	I 39179	7/01/2018	3,778.50
			COUNTY LINE ROAD	001-201-604	3,778.50	
01-00544	U.S. LAWNS OF JACKSON	147720	LAKE HARBOUR/NORTHPARK DR	I 39180	7/01/2018	964.41
			LAKE HARBOUR/NORTHPARK DR	001-201-604	964.41	
01-00544	U.S. LAWNS OF JACKSON	147721	JACKSON ST PARKING LOT	I 39181	7/01/2018	775.00
			JACKSON ST PARKING LOT	001-201-604	775.00	
01-00544	U.S. LAWNS OF JACKSON	147722	I-55 INTERCHANGE	I 39182	7/01/2018	7,897.91
			I-55 INTERCHANGE	001-201-604	7,897.91	
01-03710	UNION AUTO PARTS	147723	BELT	I 1227520-00	6/25/2018	29.88
			BELT	001-340-632	29.88	
01-03710	UNION AUTO PARTS	147724	PARTS	I 1227878-00	6/26/2018	106.10
			POWER STEERING LINE	001-340-632	17.28	
			BATTERY	001-340-632	88.82	
01-03710	UNION AUTO PARTS	147725	P307 RADIATOR REPLACEMENT	I 1229228-00	6/27/2018	598.22
			RIGHT FAN MOTOR	001-100-632	127.78	
			LEFT FAN MOTOR	001-100-632	128.89	
			FAN BLADES	001-100-632	58.44	
			RADIATOR	001-100-632	248.89	
			ANTIFREEZE	001-100-632	34.22	
01-03710	UNION AUTO PARTS	147726	PARTS FOR 328	I 1234440-00	7/05/2018	461.78
			FRONT BRAKES	001-100-632	83.11	
			REAR BRAKES	001-100-632	83.11	
			FRONT ROTORS	001-100-632	295.56	
01-03710	UNION AUTO PARTS	147727	OIL FLITERS	I 1234523-00	7/05/2018	224.16
			OIL FLITERS	001-100-632	72.96	
			OIL FLITERS	001-100-632	71.88	
			OIL FLITERS	001-100-632	79.32	
01-03710	UNION AUTO PARTS	147728	AIR FILTER 330	I 1234525-00	7/05/2018	13.14
			AIR FILTER	001-100-632	13.14	
01-03710	UNION AUTO PARTS	147729	RADIATOR ASSEMBLY p316	I 1234933-00	7/05/2018	598.22
			RADIATOR	001-100-632	248.89	
			FAN BLADES	001-100-632	58.44	
			FAN MOTOR	001-100-632	128.89	
			FAN MOTOR	001-100-632	127.78	
			ANTIFREEZE	001-100-632	34.22	
01-03710	UNION AUTO PARTS	147730	THERMOSTAT HOUSING p316	I 1235164-00	7/05/2018	23.11

VENDOR NUMBER	NAME	DOCKET NUMBER	COMMENT	INVOICE NUMBER	DATE	AMOUNT	
01-03710	UNION AUTO PARTS	147730	THERMOSTAT HOUSING p316	I 1235164-00	7/05/2018	23.11	CONT
			THERMOSTAT HOUSING	001-100-632	23.11		
01-03710	UNION AUTO PARTS	147731	REAR PADS P344	I 1236569-00	7/09/2018	46.94	
			REAR PADS P344	001-100-632	46.94		
01-05434	UNITED LC CAPITAL LLC	147732	OVERPMT 2017 PRIVILEGE LICENSE	I 201807114682	6/28/2018	9.50	
			OVERPMT 2017 PRIVILEGE LICENSE	001-000-351	9.50		
01-05434	UNITED LC CAPITAL LLC	147733	OVRPMNT 2018 PRIVILEGE LICENSE	I 201807114683	6/28/2018	20.00	
			OVRPMNT 2018 PRIVILEGE LICENSE	001-000-351	20.00		
01-02027	UNITED STATES TREASURY	147734	646001550 FORM 720 2017	I 201807124783	7/12/2018	865.78	
			646001550 FORM 720 2017	001-000-159	865.78		
01-01663	UTILITY SERVICE CO, INC	147735	OLDCANTON RD TANK	I 451405	7/01/2018	7,207.45	
			OLDCANTON RD TANK	400-650-604	7,207.45		
01-01663	UTILITY SERVICE CO, INC	147736	NATCHEZ TRACE TANK	I 451407	7/01/2018	4,080.55	
			NATCHEZ TRACE TANK	400-650-604	4,080.55		
01-01663	UTILITY SERVICE CO, INC	147737	CONCRETE GST HARDY RD TANK	I 451408	7/01/2018	2,843.12	
			CONCRETE GST HARDY RD TANK	400-650-604	2,843.12		
01-74660	VENTURE TECHNOLOGIES	147738	FD-SWITCH	I 634389	6/29/2018	1,422.00	
			SWITCH	001-160-730	1,137.00		
			SERVICE	001-160-730	285.00		
01-02597	VERIZON WIRELESS	147739	742166727-00001:05-26 - 06-25	I 9809800985	6/25/2018	120.05	
			742166727-00001:05-26 - 06-25	001-100-605	120.05		
01-02456	W F M N-FM SUPERTALK MS	147740	HEATWAVE CLASSIC ADVERTISEMENT	I 4787-00028-0001	6/30/2018	750.00	
			HEATWAVE CLASSIC ADVERTISEMENT	001-340-615	750.00		
01-05322	W H J T - FM	147741	REMOTE TALENT ADVERTISEMENT	I 5775-00056-0000	6/30/2018	150.00	
			REMOTE TALENT ADVERTISEMENT	001-340-615	150.00		
01-05322	W H J T - FM	147742	BALLOON GLOW ADVERTISEMENT	I 990-00216-0000	6/30/2018	1,900.00	
			BALLOON GLOW ADVERTISEMENT	001-340-615	1,900.00		
01-05422	W I I N - AM	147743	REMOTE TALENT ADVERTISEMENT	I 5775-00057-0000	6/30/2018	150.00	
			REMOTE TALENT ADVERTISEMENT	001-340-615	150.00		
01-05422	W I I N - AM	147744	BALLOON GLOW ADVERTISEMENT	I 990-00217-0000	6/30/2018	300.00	
			BALLOON GLOW ADVERTISEMENT	001-340-615	300.00		
01-01241	W J K K - FM "MIX 98.7"	147745	REMOTE TALENT ADVERTISEMENT	I 5775-00053-0000	6/30/2018	150.00	
			REMOTE TALENT ADVERTISEMENT	001-340-615	150.00		
01-01241	W J K K - FM "MIX 98.7"	147746	BALLOON GLOW ADVERTISEMENT	I 990-00213-0000	6/30/2018	1,900.00	
			BALLOON GLOW ADVERTISEMENT	001-340-615	1,900.00		

VENDOR NUMBER	NAME	DOCKET NUMBER	COMMENT	INVOICE NUMBER	DATE	AMOUNT
01-01269	W U S J-FM "US 96.3"	147747	REMOTE TALENT ADVERTISEMENT	I 5775-00054-0000	6/30/2018	225.00
			REMOTE TALENT ADVERTISEMENT	001-340-615	225.00	
01-01269	W U S J-FM "US 96.3"	147748	BALLOON GLOW ADVERTISEMENT	I 990-00214-0000	6/30/2018	1,900.00
			BALLOON GLOW ADVERTISEMENT	001-340-615	1,900.00	
01-01268	W Y O Y-FM "101.7...Y101"	147749	REMOTE TALENT ADVERTISEMENT	I 5775-00055-0000	6/30/2018	150.00
			REMOTE TALENT ADVERTISEMENT	001-340-615	150.00	
01-01268	W Y O Y-FM "101.7...Y101"	147750	BALLOON GLOW ADVERTISEMENT	I 990-00215-0000	6/30/2018	800.00
			BALLOON GLOW ADVERTISEMENT	001-340-615	800.00	
01-01268	W Y O Y-FM "101.7...Y101"	147751	BALLOON GLOW ADVERTISEMENT	I 9969-00002-0000	6/30/2018	904.00
			BALLOON GLOW ADVERTISEMENT	001-340-615	904.00	
01-75450	WALMART	147752	SUPPLIES	I 05550	6/29/2018	53.72
			COFFEE	001-340-540	19.96	
			SPOONS	001-340-540	8.88	
			CITRONELLA	001-340-540	24.88	
01-75450	WALMART	147753	BALLOON GLOW SUPPLIES	I 07759A	6/28/2018	56.66
			GATORADE	001-340-650	17.94	
			RED BULL	001-340-650	6.24	
			CHEEZ-IT	001-340-650	2.88	
			WHEAT THINS	001-340-650	2.16	
			LAYS KETTLE	001-340-650	2.50	
			DORITOS	001-340-650	3.98	
			SALSA	001-340-650	5.96	
			TOSTITOS	001-340-650	3.48	
			PRETZELS	001-340-650	2.88	
			BEEF JERKY	001-340-650	7.98	
			POSTER BOARD	001-340-650	0.66	
01-75450	WALMART	147754	JANITORIAL SUPPLIES	I 08380	6/26/2018	322.13
			GLADE AEROSOL	001-092-510	1.94	
			LIGHTBULBS	001-092-510	7.94	
			COFFEE	001-092-510	64.90	
			FAB AP CLEANER	001-092-510	2.53	
			FEBREEZE	001-092-510	4.94	
			LYSOL WIPES	001-092-510	4.47	
			TIDE PEN	001-092-510	5.94	
			BLEACH	001-092-510	2.36	
			COFFEE FILTERS	001-092-510	4.41	
			MEGA TOILET TISSUE	001-092-510	75.88	
			TOILET TISSUE	001-092-510	49.88	
			PAPERTOWEL 3PK	001-092-510	38.80	
			HAND SOAP	001-092-510	7.94	
			COFFEE CREAMER	001-092-510	11.86	
			CLOROX WIPES 3PK	001-092-510	9.23	
			FACIAL TISSUES 4PK	001-092-510	7.94	
			CLOROX SCENTED WIPES	001-350-510	9.96	

VENDOR NUMBER	NAME	DOCKET NUMBER	COMMENT	INVOICE NUMBER	DATE	AMOUNT	
01-75450	WALMART	147754	JANITORIAL SUPPLIES	I 08380	6/26/2018	322.13	CONT
			CLOROX WIPES 3PK	001-350-510	9.23		
			DISINFCTNG HANDWIPES	001-350-510	1.98		
01-75450	WALMART	147755	SUPPLIES	I 08684	7/05/2018	60.80	
			DAWN SOAP	400-650-540	6.88		
			SUGAR	400-650-540	2.86		
			CREAMER	400-650-540	4.63		
			COFFEE	400-650-540	20.79		
			PINESOL	400-650-540	19.76		
			BLEACH	400-650-540	5.88		
01-75750	WARING OIL CO	147756	FD-OIL & DIESEL	I 001677195	6/20/2018	539.28	
			OIL	001-160-525	525.00		
			OIL TAX	001-160-525	4.40		
			COMPLIANCE FEE	001-160-525	9.88		
01-75750	WARING OIL CO	147757	FD-OIL & DIESEL	I 001677675	6/21/2018	248.82	
			DIESEL	001-160-525	233.18		
			MS ENVIRONMENTAL TAX	001-160-525	0.36		
			FEDERAL LUST TAX	001-160-525	0.09		
			MISS SPECIAL FUELS	001-160-525	5.12		
			COMPLIANCE FEE	001-160-525	9.88		
			FED OIL SPILL TAX	001-160-525	0.19		
01-75750	WARING OIL CO	147758	FUEL	I 001679501	6/26/2018	1,558.49	
			DIESEL FUEL	001-340-525	840.84		
			GASOLINE	001-340-525	648.56		
			ENVIRONMENT TAX	001-340-525	1.07		
			ENVIRONMENT TAX	001-340-525	1.46		
			LUST TAX	001-340-525	0.63		
			STATE AND LOCAL GOV	001-340-525	33.77		
			SPECIAL FUELS	001-340-525	20.93		
			COMPLIANCE FEE	001-340-525	9.88		
			OIL SPILL TAX	001-340-525	1.35		
01-75900	WASTE MANAGEMENT OF MS	147759	JUNE 2018 SERVICES	I 0009800-1894-9	7/03/2018	115,959.13	
			JUNE 2018 SERVICES	003-220-682	82,665.97		
			JUNE 2018 SERVICES	003-220-683	33,293.16		
01-75900	WASTE MANAGEMENT OF MS	147760	JUNE 2018 SERVICES	I 2870091-0078-8	6/21/2018	1,100.00	
			JUNE 2018 SERVICES	001-340-682	800.00		
			JUNE 2018 SERVICES	001-201-682	80.00		
			JUNE 2018 SERVICES	400-650-682	80.00		
			JUNE 2018 SERVICES	001-100-682	80.00		
			JUNE 2018 SERVICES	001-350-682	60.00		
01-04506	WELLS MARBLE & HURST PLLC	147761	2014 ZONING ORDINANCE MATTERS	I 115106	7/03/2018	6,447.00	
			2014 ZONING ORDINANCE MATTERS	001-180-601	6,447.00		
01-05435	WOMACK MACHINE SUPPLY	147762	OVERPAYMENT-PRIVILEGE LICENSE	I 201807114681	6/26/2018	6.40	
			OVERPAYMENT-PRIVILEGE LICENSE	001-000-351	6.40		

VENDOR NUMBER	NAME	DOCKET NUMBER	COMMENT	INVOICE NUMBER	INVOICE DATE	INVOICE AMOUNT
01-02552	YOUNG, ELLIOTT S	147763	REIMBURSE FOR TRAVEL TO MML	I 201807124784	6/29/2018	31.87
			REIMBURSE FOR TRAVEL TO MML	001-040-610	31.87	

TOTAL = 520,959.93

FUND TOTALS

FUND	NAME	TOTAL
001	GENERAL FUND	318,483.26
003	SANITATION	115,959.13
005	COURT SERVICES FEE FUND	2,779.67
400	PUBLIC UTILITIES FUND	83,508.88
404	EMCRS OPERATION & MAINT	228.99
	TOTALS FOR ALL FUNDS =	520,959.93

PACKET: 16996 Regular Payments

VENDOR SET: 01 **** CHECK LISTING ****

BANK : PYBK PAYROLL RELATED DISB

June 2018 Month end

VENDOR	NAME / I.D.	DESC	CHECK TYPE	CHECK DATE	DISCOUNT	AMOUNT	CHECK NO#	CHECK AMOUNT
00027	MISS DEPT OF HUMAN SERVICE							
	I-CO5201806054448	VARIOUS CHILD SUPP MONTHLY	R	6/29/2018		75.00CR	137410	
	I-CO5201806194592	VARIOUS CHILD SUPP MONTHLY	R	6/29/2018		75.00CR	137410	150.00

PACKET: 16996 Regular Payments
VENDOR SET: 01 *** DRAFT/OTHER LISTING ***
BANK : PYBK PAYROLL RELATED DISB

VENDOR	NAME / I.D.	DESC	ITEM TYPE	ITEM DATE	DISCOUNT	AMOUNT	ITEM NO#	ITEM AMOUNT
00010	STATE TAX COMMISSION							
	I-T2 201806054448	STATE TAX WITHHOLDING	D	6/29/2018		12,433.00CR	000315	
	I-T2 201806194592	STATE TAX WITHHOLDING	D	6/29/2018		12,497.00CR	000315	24,930.00
00011	GOVT EMPL DEFERRED COMP P							
	I-ANN201806054448	ANNUITY	D	6/29/2018		1,094.50CR	000316	
	I-ANN201806194592	ANNUITY	D	6/29/2018		2,234.50CR	000316	3,329.00
00029	CITY OF RIDGELAND PAYROLL							
	I-RET201806054448	RETIREMENT	D	6/29/2018		106,213.70CR	000317	
	I-RET201806194592	RETIREMENT	D	6/29/2018		109,829.58CR	000317	216,043.28

* * T O T A L S * *	NO#	DISCOUNTS	CHECK AMT	TOTAL APPLIED
REGULAR CHECKS:	1	0.00	150.00	150.00
HANDWRITTEN CHECKS:	0	0.00	0.00	0.00
PRE-WRITE CHECKS:	0	0.00	0.00	0.00
DRAFTS:	3	0.00	244,302.28	244,302.28
VOID CHECKS:	0	0.00	0.00	0.00
NON CHECKS:	0	0.00	0.00	0.00
CORRECTIONS:	0	0.00	0.00	0.00
REGISTER TOTALS:	4	0.00	244,452.28	244,452.28

TOTAL ERRORS: 0 TOTAL WARNINGS: 0

PACKET: 16996 Regular Payments

VENDOR SET: 01 *** DRAFT/OTHER LISTING ***

BANK : PYBK PAYROLL RELATED DISB

VENDOR	NAME / I.D.	DESC	ITEM TYPE	ITEM DATE	DISCOUNT	AMOUNT	ITEM NO#	ITEM AMOUNT

** POSTING PERIOD RECAP **

FUND	PERIOD	AMOUNT
001	6/2018	218,829.49CR
005	6/2018	1,879.18CR
400	6/2018	22,441.87CR
404	6/2018	1,301.74CR
ALL		244,452.28CR

DEPT: ALL
PAYROLL NO#: 01
PAY PERIOD BEGINNING: 6/15/2018
PAY PERIOD ENDING: 6/28/2018

July 6, 2018 payroll

*** GRAND TOTALS ***

EARNINGS			BENF/REIMB	
DESC	HRS	AMOUNT	DESC	AMOUNT
SAL	1,062.00	41,662.52	VEH	174.00
SMON	0.00	9,231.91		
REG	17,929.00	311,219.12		
R/O	15.00	247.10		
O/T	784.50	19,976.51		
CE	18.76	0.00		
CMPRG	11.25	0.00		
COMP	38.75	717.72		
SICK	388.75	7,509.96		
VAC	2,033.50	40,616.73		
HOL	654.50	13,069.14		
FNRL	30.00	456.84		
MLT	48.00	496.80		
PARAM	0.00	1,153.85		
SHIFT	0.00	550.00		
TASKF	20.00	786.00		
FUGTF	17.00	450.33		
MBNHI	18.00	476.82		

DEDUCTIONS			
CD	ABBV	EMPLOYEE	EMPLOYER
AFA	AFACC	965.23	
AFC	AFCAN	1005.21	
AFD	AFSHO	792.82	
AFH	AFHOS	472.15	
AFS	AFSPE	268.12	
ANN	ANUTY	1044.50	
C18	CHSUP	202.50	
C19	CHSUP	130.50	
C32	CHSUP	225.00	
C33	CHSUP	25.00	
C39	CHSUP	152.50	
C42	CHSUP	147.50	
C43	CHSUP	110.00	
C54	CHSUP	72.50	
C56	CHSUP	130.00	
C57	CHSUP	75.00	
C58	CHSUP	164.00	
C59	CHSUP	285.25	
C60	CHSUP	193.00	
C61	CHSUP	90.00	
C63	CHSUP	96.00	
C66	CHSUP	107.50	
C67	CHSUP	177.50	
C68	CHSUP	107.50	
C69	CHSUP	225.00	
CAF	ADMFE	111.75	131.12
CCF	CANCF	48.74	
CHC	CHCAR	749.99	
CO5	CHSUP	75.00	
CRU	CRUN	4860.00	
D42	GARNI	8.58	
D56	GARNI	230.24	
DCF	DENCF	2021.53	1196.80
DEN	DENTL		2097.92
FCE	FLEX	4.96	
HCF	HTHCF	13064.11	13338.39
HCP	HECOP		1.13
HLT	HELTH		31702.84
HRF	HRF	172.36	264.47
LIF	LIFE	46.48	1234.90
PBA	POBEN	223.25	
RET	RET	39716.39	69735.67

TAXES			
DESC	TAXABLE	EMPLOYEE	EMPLOYER
FED W/H	387,356.06	34,476.01	
ST WH MS	387,356.06	13,103.00	
FICA	428,116.95	26,543.25	26543.25
MEDI	428,116.95	6,207.69	6207.69

DEPT: ALL
PAYROLL NO#: 01
PAY PERIOD BEGINNING: 6/15/2018
PAY PERIOD ENDING: 6/28/2018

** (CONTINUED) **

DATE	ORG FN	ACCOUNT	CODE/RATE	HOURLY RATE	HOURS	AMOUNT	PROJECT
				T29 TAXLE	1472.60		
				UNR UNREM	2234.73		
TOTALS:	23,069.01	448,621.35	174.00		72304.99	119703.24	80,329.95 32750.94

DEPARTMENT RECAP

DEPT NO#	GROSS	REGULAR	OVERTIME	LEAVE	OTHER	BENEFITS	DEDUCTIONS	TAXES	NET
001-010	14,485.85	14,351.53	0.00	134.32	0.00	0.00	1,674.28	2,206.73	10,604.84
001-020	5,882.86	5,882.86	0.00	0.00	0.00	0.00	1,090.40	1,089.87	3,702.59
001-040	22,224.81	20,183.10	0.00	2,041.71	0.00	0.00	3,656.64	3,651.32	14,916.85
001-092	1,254.40	1,254.40	0.00	0.00	0.00	0.00	348.79	141.24	764.37
001-100	140,823.82	107,783.09	4,785.45	25,992.13	2,263.15	0.00	22,362.15	25,126.91	93,334.76
001-160	103,465.08	75,936.74	14,276.19	12,098.30	1,153.85	0.00	18,745.58	18,451.74	66,267.76
001-180	23,152.87	21,320.47	0.00	1,832.40	0.00	0.00	3,840.41	4,344.47	14,967.99
001-201	53,113.04	44,839.51	816.02	7,161.13	194.38	102.00	7,897.57	9,546.42	35,567.05
001-340	31,608.39	28,465.89	0.00	3,142.50	0.00	0.00	3,601.39	5,625.00	22,382.00
005-101	3,770.56	3,770.56	0.00	0.00	0.00	0.00	824.72	660.63	2,285.21
400-650	46,561.67	35,873.40	98.85	10,464.70	52.72	72.00	7,715.37	9,158.99	29,615.31
404-650	2,452.00	2,452.00	0.00	0.00	0.00	0.00	547.69	326.63	1,577.68
TOTALS	448,795.35	362,113.55	19,976.51	62,867.19	3,664.10	174.00	72,304.99	80,329.95	295,986.41

REGULAR INPUT: 263 MANUAL INPUT: 0 CHECK STUB COUNT: 1 DIRECT DEPOSIT STUB COUNT: 262

Alan Hart

From: Mason Pennaman <steelbuilder05@yahoo.com>
Sent: Tuesday, July 10, 2018 4:47 PM
To: Alan Hart
Subject: Towery Progress July 10th

Finished with siding on back side of house and presently completing the rest of siding on Whole house.