MEETING OF THE
MAYOR AND BOARD OF ALDERMAN OF THE
CITY OF RIDGELAND, MISSISSIPPI
June 5, 2018
6:00 PM

INVOCATION

PLEDGE OF ALLEGIANCE

CONSIDERATION OF MINUTES FROM PRIOR BOARD MEETING

May 15, 2018 Board Minutes

CONSIDERATION OF MINUTES FROM PRIOR WORK SESSION

May 14, 2018 Work Session Minutes

1. AGENDA ITEMS

a) Approve Special Event Permit for Township at Colony Park - Movies in the Park

b) Consider Architectural Lighting Improvements to the C Spire Building

c) Consider Site Plan / Architectural Review for Rice Road Place

2. CONSENT ITEMS

a) Accept Withdrawal of Petition and Application for Conditional Use Permit by State Street Group Realty, LLC for a Climate Controlled Storage Facility

b) Accept Withdrawal from JP Kruger for Site Plan / Architectural changes to Ridgeland Service Center for the use of the front of the building for a car wash

c) Declare Surplus Property for Ridgeland Police Department

d) Approve Special Event Permit for Mississippi Race Management - Ella Strong Triathlon

e) Approve Special Event Permit for Krispy Kreme Doughnuts - National Doughnut Day

f) Approve East County Line Road Rehabilitation Contractor's Final Change Order #1, Final Pay Estimate #1 and Project Close-Out Documents

g) Approve Lake Harbour Drive Extension Preliminary Engineering Pay Estimate #55

h) Approve East Lake Harbour Drive Rehabilitation/Northpark Drive to Breakers Lane CE&I Pay Estimate #3

i) Approve I-55 Split Diamond Interchange - MDOT Easement & Construction Agreement Amendment #1 to Original Agreement dated June 25, 2013

j) Declare Property Surplus and Authorize Sale to Madison County School District

k) Receive April 2018 Privilege License Report

3. PAYMENT OF CLAIMS

a) Payment of Claims 146381 - 146815 Excluding Costco Related Charges in Claim #146674 ($2,376,010.54)

b) Payment of Costco Related Charges in Claim #146674

4. EXECUTIVE SESSION

ADJOURNMENT

INFORMATION FOR MAYOR AND BOARD

700 Towery Court Update

City Attorney Statement for Services thru 5/25/2018

MEETING OF THE
MAYOR AND BOARD OF ALDERMAN OF THE
CITY OF RIDGELAND, MISSISSIPPI
May 15, 2018
6:00 PM

The Mayor opened the May 15, 2018 meeting of the Mayor and Board of Aldermen to order. Present were Alderman Chuck Gautier, Alderman Wesley Hamlin (via telephone), Alderman Ken Heard, Alderman Kevin Holder, Alderman Brian Ramsey, Alderman D.I. Smith, Alderman Bill Lee, City Attorney Jerry Mills, City Attorney John Scanlon, and City Clerk Paula Tierce. The meeting was opened with an invocation by Alderman Chuck Gautier followed by the pledge of allegiance.

****

The Mayor and Board of Aldermen were provided the April 2018 Financial Statement and the May 2018 Sales Tax Report.

****

Next came the recognition of Corporal Kelly Chapin for being selected "Officer of the Month" for April 2018. Mayor McGee announced that during the recent Lake Harbour Drive rehabilitation, Corporal Kelly Chapin was responsible for ensuring that traffic control in the areas impacted by this project was conducted efficiently. His display of supervisory skills in managing traffic control officers and on duty personnel was outstanding as this project was conducted primarily during rush hour traffic. Corporal Chapin maintained constant oversight of traffic throughout each day, assisting to move equipment through the intersections as needed. He was also in constant contact with the project foreman and met with the Federal Highway Safety Commission, MDOT and the owners of Dickerson & Bowen to discuss any issues and/or concerns. In addition, Corporal Chapin compiled reports of accidents that may have occurred at the site and reported same to the project managers. Approximately 150 hours of man hours were worked during this project to ensure the safety of our citizens. Corporal Kelly Chapin's experience, supervisory skills and dedication are indicative of a motivated and professional officer. Corporal Chapin continues to be a valid asset to the Ridgeland Police Department. Mayor McGee thanked Corporal Kelly Chapin for his hard work and service to the City of Ridgeland and encouraged him to keep up the good work.

****

Next came the matter of accepting the Minutes of the May 1, 2018 Board of Aldermen meeting. The Minutes were accepted with no corrections noted.

****

Next came the consideration of the Site Plan Review for Ridgeland Service Center Car Wash. Alderman Ken Heard moved to table the matter until the second meeting in June. The Motion was seconded by Alderman D.I. Smith and a vote was taken thereon as follows:

Vote: Aye(s): Alderman Chuck Gautier, Alderman Wesley Hamlin, Alderman Ken Heard, Alderman Kevin Holder, Alderman Brian Ramsey, Alderman D.I. Smith, Alderman Bill Lee

Nay(s): None

Abstention(s): None

The Mayor then declared the Motion carried.

****

(Alderman Chuck Gautier left the meeting and recused himself.)

Next came the consideration of the Special Event Permit for Feet Fleet Sports - The Big Run. Alderman Brian Ramsey moved to approve. The Motion was seconded by Alderman Kevin Holder and a vote was taken thereon as follows:

Vote: Aye(s): Alderman Wesley Hamlin, Alderman Ken Heard, Alderman Kevin Holder, Alderman Brian Ramsey, Alderman D.I. Smith, Alderman Bill Lee

Nay(s): None

Absent: Alderman Chuck Gautier

The Mayor then declared the Motion carried. A copy of the Special Event Permit is attached hereto as Exhibit "A".

(Alderman Chuck Gautier rejoined the meeting.)

****

Next came the consideration of the items set out on the Consent Agenda. Alderman Kevin Holder moved to approve the Consent Agenda:

a) - Site Plan / Architectural Review for Go Shine Carwash including a variance to the driveway spacing requirements - Order Attached Hereto As Exhibit "B"

b) - Approve Police Department Budget Amendment Decreasing 001-000-394 (Sale of Equipment) $5,971.81 and Increasing 001-100-740 (Capital Vehicles) $5,971.81 - Resolution Attached Hereto As Exhibit "C"

c) - Accept Donation from Merrill Lynch and Approve Police Department Budget Amendment Decreasing 010-000-348 (Police Donation Fund) $1,352.00 and Increasing 001-100-730 (Capital Machinery & Equipment) $1,352.00 - Resolution Attached Hereto As Exhibit "D"

d) - Receive EMC Insurance Claim Check and Approve Police Department Budget Amendment Decreasing 001-000-354 (Insurance Proceeds) $3,121.45 and Increasing 001-100-632 (Vehicle Expense) $3,121.45 - Resolution Attached Hereto As Exhibit "E"

e) - Approve Special Event Permit for Pediatric Brain Tumor Foundation - Ride for Kids - Order Attached Hereto As Exhibit "F"

f) - Approve Special Event Permit for Business Communications, Inc - Customer Appreciation Crawfish Boil - Order Attached Hereto As Exhibit "G"

g) - Approve Special Event Permit for The Bike Crossing - Mayhem Ride for Rehab - Order Attached Hereto As Exhibit "H"

h) - Approve East Lake Harbour Drive Rehabilitation Contractor Pay Request #2 - Order

Attached Hereto As Exhibit "I"

i) - Designate Mayor Gene McGee and One Alternate as Voting Delegates at the MML 2018 Annual Conference - Resolution Attached Hereto As Exhibit "J"

j) - Budget Amendment (Finance & Administration) - Resolution Attached Hereto As Exhibit "K"

The motion was seconded by Alderman D. I. Smith and a vote was taken thereon as follows:

Vote: Aye(s): Alderman Chuck Gautier, Alderman Wesley Hamlin, Alderman Ken Heard, Alderman Kevin Holder, Alderman Brian Ramsey, Alderman D.I. Smith, Alderman Bill Lee

Nay(s): None

Abstention(s): None

The Mayor then declared the Motion carried.

****

Next came the payment of Claims 146006 -146380 and May 11, 2018 Payroll ($2,317,745.800). Alderman Ken Heard moved to approve. The Motion was seconded by Alderman Chuck Gautier and a vote was taken thereon as follows:

Vote: Aye(s): Alderman Chuck Gautier, Alderman Wesley Hamlin, Alderman Ken Heard, Alderman Kevin Holder, Alderman Brian Ramsey, Alderman D.I. Smith, Alderman Bill Lee

Nay(s): None

Abstention(s): None

The Mayor then declared the Motion carried.

****

There being no further business before the Board of Aldermen, the Mayor announced that he was closing the formal portion of the meeting and that Paula Tierce, City Clerk, would be providing information regarding the FY2019 budget. The meeting adjourned at 6:38 p.m.

WITNESS MY SIGNATURE, this the _____ day of May, 2018.

_____
GENE F. MCGEE, MAYOR

ATTEST:

_____
PAULA TIERCE, CITY CLERK

MINUTES OF THE WORK SESSION
OF THE MAYOR AND BOARD OF ALDERMEN
OF THE CITY OF RIDGELAND
MAY 14, 2018
6:00 P.M.

The Mayor opened the work session of May 14, 2018 of the Mayor and Board of Aldermen. Present were Alderman D. I. Smith, Alderman Bill Lee, Alderman Chuck Gautier, Alderman Kevin Holder, Alderman Brian Ramsey, Alderman Ken Heard, Alderman Wesley Hamlin, City Attorney Jerry Mills, City Attorney John Scanlon, and City Clerk Paula Tierce.

The Mayor presented the proposed agenda. Each item was discussed with no action being taken by the Mayor & Board of Aldermen.

An update on 700 Towery Court was given by Community Development Director, Alan Hart.

Mayor McGee introduced Kristen Beal as the replacement of Sandra Monohan in the position of Community Relations.

The meeting concluded at 6:25 p.m.

WITNESS MY SIGNATURE, this the _____ day of May, 2018.

_____
Mayor Gene F. McGee

ATTEST:

_____
Paula Tierce, City Clerk

the city of RIDGELAND

police department

May 24, 2018

TO: Mayor & Board of Aldermen

FROM: John R. Neal, Chief of Police

SUBJECT: Special Event – Movies in the Park – Township at Colony Park

I have attached a request for a Special Event Permit from Julie Darling with Township of Colony Park. This event is Movies in the Park scheduled Saturday, June 9, 2018 from 6:00 p.m. until10:00 p.m. to be held on the grassy plot just north of the lake in the Township at Colony Park. Map with location is attached for your review.

Ms. Darling is expecting approximately 200 participants who will be allowed to bring their dogs. Portable restrooms will be available on site to accommodate participants and event volunteers will be responsible for set-up and clean-up upon conclusion of the event.

This event will not generate overtime for the police department and the on-duty beat officer will conduct periodic patrols of the area.

Attached are checks in the amount of $100.00 and $1,000.00 representing requisite filing fee and bond money. Also attached is the application for Permit to Play On-Premises Music.

Your consideration and approval will be greatly appreciated.

CC: Lt. Tony Willridge

Attachments (1)

115 west school street · ridgeland, ms 39157
ph: 601.856.2121 · www.ridgelandms.org

Gene F. McGee, cmo - mayor · John R. Neal - chief of police
board of aldermen: D.I. Smith, cmo - at-large · Ken Heard, cmo - ward 1 · Chuck Gautier, cmo - ward 2
Kevin Holder, cmo, mayor pro tempore - ward 3 · Brian P. Ramsey, cmo - ward 4 · Bill Lee - ward 5 · Wesley Hamlin, cmo - ward 6

the city of RIDGELAND

CITY OF RIDGELAND
SPECIAL EVENT PERMIT APPLICATION

(Please allow minimum 30 days for approval)

EVENT NAME: Movies in the Park

EVENT LOCATION: The Township at Colony Park

EVENT DATE: Beginning Sat 6/9 to Ending Sat 6/9 Multiple Days: ☐ YES ☒ NO

EVENT HOURS: Beginning 6 pm to Ending 10 pm

TYPE OF EVENT: Family Movie Viewing w/ Bark in the Park (dogs)

EVENT POINT OF CONTACT: Julie Darling CELL NUMBER: 580 736 3451
(This person must remain on scene during the entire event)

NAME OF ORGANIZATION: The Township at Colony Park

ADDRESS: 361 Township Ave Suite 200 CITY/STATE/ZIP: Ridgeland

ESTIMATED CROWD SIZE: 500 NUMBER OF EVENT PERSONNEL: 10+

ARRANGEMENTS FOR RESTROOM FACILITIES: ☒ YES ☐ NO LOCATION: Parking lot

ARRANGEMENTS FOR SITE CLEAN-UP: ☒ YES ☐ NO DETAILS: done by employees of The Township

RECYCLING PROGRAM FOR WASTE: ☐ YES ☒ NO DETAILS:

The City of Ridgeland will assist organizers in planning and locating recycle bins for recyclable waste through local companies. Event organizers are encouraged to maintain the City of Ridgeland's vision of a green environment by having your event recycle its waste.

Will the organizers of this event use the services of an UAS (unmanned aircraft system): ☐ YES ☒ NO
If Yes, who is the operator of the system: Cell Number:
If an UAS/Drone will be utilized, a copy of the following required documents must be attached to this application:

- Section 333 Exemption or Aircraft Certification
- Certificate of Authorization (COA)
- Aircraft Registration and Markings
- Pilot Certificate

FIRST AID/MEDICAL STATION(s): ☐ YES ☒ NO LOCATION(s):

POLICE/SECURITY PERSONNEL REQUIRED: ☐ Police Dept. Assigned ☐ Self-Hired ☐ Not Applicable

ASSISTANCE FROM OTHER CITY DEPARTMENTS: ☐ Fire Department ☐ Public Works/Streets ☐ Recreation/Parks

Applicant Printed Name: Julie Darling Contact Number: 601-499-0981

Applicant Signature: Julie Darling Date: 5/15/18

Application Instructions

1). You must present to the Chief of Police or his designee your plan for parking and traffic control. You must state in this plan whether or not police or private security personnel will be needed to direct and handle traffic and parking.

2). City of Ridgeland Special Events Ordinance section 10-33(2) requires adequate security be provided at special events. This requirement is one security officer for every 400 people in attendance. A private security company may be used but preference shall be given to the hiring of off duty personnel. The assistance from Ridgeland Police Department for road course races/walks to secure intersections shall not be considered as part of the security requirement. The personnel assigned for traffic control are in addition to any requirement for on site security personnel required in the ordinance.

3). If the event is to have outdoor music, a Permit to Play on Premises Music will be required from the applicant agreeing to comply with the noise ordinance of the City of Ridgeland, MS.

4). If there is a need for Police Dept., Fire Dept., Public Works Dept. and/or Rec/Parks Dept. personnel to work in controlling the special event, the applicant will agree to pay this cost from the filing of a bond fee.

5). The applicant may be required to post a bond fee in the minimum amount of one thousand dollars ($1,000.00) with the City Clerk. This is to ensure that the event area is immediately cleaned up after its conclusion, and any City employee who works overtime as a result of the special event, will be compensated from the bond proceeds.

6). Submit the above application and information to the Office of the Chief of Police with a non-refundable filing fee of one hundred dollars ($100.00) along with the above referenced bond fee. This application will be forwarded to the Patrol Division Commander or a designee who will review the application for all required documentation. This application and documentation will be presented to the Ridgeland Board of Aldermen for subsequent approval. **Please allow a minimum of 30 days to complete the process and receive approval.**

7). Event organizers should submit a map outlining the area where an event is to be held. Points of interest (entrance/exit points, first aid stations, etc…) shall be included on this map. If the event is a road race/walk, a map reflecting the proposed course route along with a description of the route shall be included. If any portion of the route will include sections of the Natchez Trace Parkway, you must first obtain approval from the Natchez Trace Chief (phone no. 662-680-4014; Ridgeland office 601-856-7321) and documentation reflecting this approval must be submitted with this application.

8). If the event is to be held at Old Trace Park and/or Madison Landing, you must first seek approval from PRVWSD Parks and Recreation (601-856-6319) and obtain a Facility Use Application which must be submitted with this application.

9). The number of event personnel will represent the number of people from the organization who will be assisting with the overall operation of the event. This will include any volunteers from the organization.

10). The arrangements for restroom facilities as addressed in the Ridgeland Code of Ordinances indicate 1 restroom per 150 people in attendance. These may be portable restrooms or existing restroom structures.

11). The event organizer or organization will be responsible for clean-up at the conclusion of the event. The City of Ridgeland encourages organizations to participate in a recycle program for any waste or debris to be discarded.

12). The first aid station located on the event site shall be manned by a state certified EMT.

13). The number of police/security personnel shall be determined by the expected crowd size. The event organizer may staff the event to satisfy this requirement through off-duty law enforcement personnel. The Ridgeland Police Department will assist the organizers if they choose the police department assigned option, or the event organizers may choose the self-hire option to select their own personnel to comply with the ordinance.

For Police Department Use Only

This application was received by the Ridgeland Police Department on 5/15/18 and has been reviewed by the appropriate personnel. This application has been APPROVED / DENIED by the Chief of Police or Designee. If approved by Ridgeland PD, this application will be submitted for consideration at the Ridgeland Mayor and Board of Alderman meeting to be held on 6-5-18.

Chief of Police or Designee: _____ DATE: 24 MAY 2018

Number of Overtime Officers: Ø Estimated OT Cost: Ø

Additional Overtime Cost for City Departments: FIRE Ø P/W Ø REC/PARKS Ø

the city of RIDGELAND

CITY OF RIDGELAND
APPLICATION FOR
PERMIT TO PLAY ON PREMISES MUSIC

(Please allow minimum 30 days for approval)

DATE OF APPLICATION: 5/15/18

EVENT NAME: Movies In The Park

EVENT LOCATION: The Township @ Colony Park

DESCRIPTION OF ON-PREMISES ACTIVITY: Movie on a large screen

DATE OF ACTIVITY: Beginning 6/9/18 to Ending 6/9/18

HOURS OF ACTIVITY: Beginning 6 pm to Ending 10 pm

ACTIVITY POINT OF CONTACT: _____ CELL NUMBER: _____

(This person must remain on scene during the entire event)

NAME OF ORGANIZATION: The Township at Colony Park

ADDRESS: 1107 Highland Colony Parkway CITY/STATE/ZIP: Ridgeland

MAXIMUM NOISE LEVEL (In Decibels) TO BE EMITTED AT NEAREST PREMISES BOUNDARY: 110

PROVIDE FACTS THAT WOULD SHOW THE ACTIVITY FOR WHICH THE PERMIT IS REQUESTED WOULD NOT DISTURB THE PEACE OF ANY FAMILY OR PERSON WITHIN THE AREA INTO WHICH SOUND SHALL CARRY:

This is an annual event + there have not been any complaints in past

THE CHIEF OF POLICE SHALL HAVE THE AUTHORITY TO REVOKE ANY PERMIT ISSUED.

Applicants Signature: Julie T Daly Date: 5/15/18

☑ APPROVED Chief of Police or Designee:

☐ DENIED Date: 24 MAY 2018

In the event a permit is denied, the applicant may appeal the decision to the Mayor and Board of Aldermen. Any such appeal shall be taken not more than ten (10) days from the denial of a permit by giving written notice of the appeal to the Ridgeland City Clerk.

Location of event
Bridge Over Bridge

The Township at Colony Park CBD Association, Inc.
361 Township Avenue, Suite 200
Ridgeland, MS 39157
601-368-9950

Trustmark National Bank
PO Box 22749
Jackson, MS 39225-2749

2330

Pay: **** ONE HUNDRED AND 00/100 DOLLARS

05/15/18 $*****100.00

TO THE ORDER OF

City of Ridgeland
PO Box 217
Ridgeland, MS 39158

THIS DOCUMENT CONTAINS HEAT SENSITIVE INK. TOUCH OR PRESS HERE - RED IMAGE DISAPPEARS WITH HEAT.

⑈00000 2330⑈ ⑆065300279⑆ 100204398 2⑈

ORIGINAL DOCUMENT PRINTED ON CHEMICAL REACTIVE PAPER WITH MICROPRINTED BORDER

The Township at Colony Park CBD Association, Inc.
361 Township Avenue, Suite 200
Ridgeland, MS 39157
601-368-9950

Trustmark National Bank
PO Box 22749
Jackson, MS 39225-2749

2329

Pay: **** ONE THOUSAND AND 00/100 DOLLARS

05/15/18 $***1,000.00

TO THE ORDER OF

City of Ridgeland
PO Box 217
Ridgeland, MS 39158

THIS DOCUMENT CONTAINS HEAT SENSITIVE INK. TOUCH OR PRESS HERE - RED IMAGE DISAPPEARS WITH HEAT.

⑈00000 2329⑈ ⑆065300279⑆ 100204398 2⑈

cspire

c spire

cspire

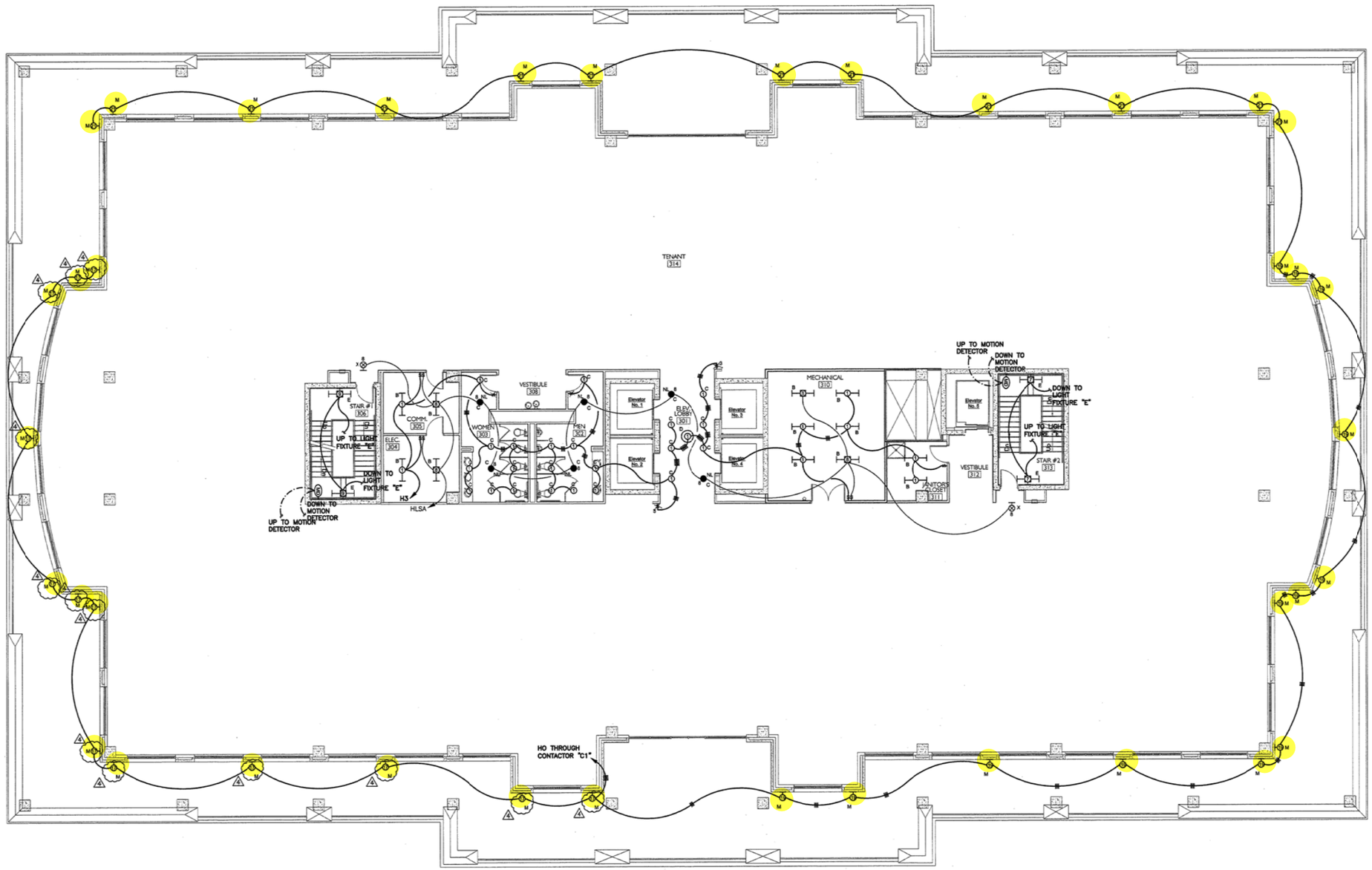

1 / E1.3 **LEVEL 3 - LIGHTING PLAN**

Scale: 1/8" = 1'

THE POWER SOURCE
945 MADISON AVE.
MADISON, MS 39110
VOICE (601) 605-4829
FAX (601) 605-4875
ACENG2000@AOL.COM

DALE AND ASSOCIATES ARCHITECTS P.A.
One Jackson Place, Suite 250
188 E. Capitol Street
Jackson, MS 39201-2100
P: 601.352.5362

CHRISTOPHER L. GREEN
REGISTERED PROFESSIONAL ENGINEER
16778
STATE OF MISSISSIPPI

300 Renaissance at Colony Park

300 Renaissance, LLC
Ridgeland, MS

Project No.:	05090
Date:	03 MARCH 2006
Drawn by:	STT
Checked:	CLG
Revisions:	
Revisions:	
Revisions:	
Revisions:	

E1.3

Specification Sheet

lumenbeam
Large
COLOR CHANGING

Project Name Cspire **Qty** 38

Type M **Catalog / Part Number**

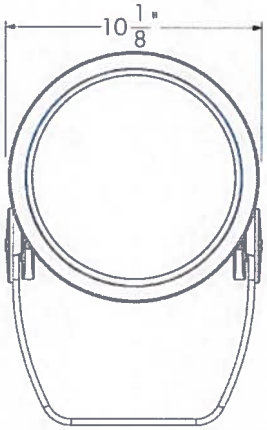

Front view

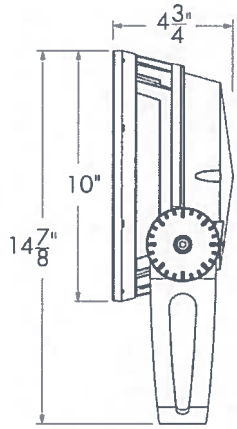

Side view

Photometric Summary

Based on RGBW color mix, full output

	Delivered output (lm)	Intensity (peak cd)
VN	2,233	93,100
NS	1,767*	60,125*
NF	1,631*	11,977*
FL	1,642*	4,543*
WFL	1,600*	1,513*

Photometric performance is measured in compliance with IESNA LM-79-08.
*Estimated. Consult website for the latest IES and LDT files.

Optics

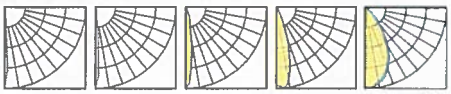

VN NS NF FL WFL

Control

lumentalk DMXrdm

Rating

c UL us CE RoHS

Description

The Lumenbeam Large Color Changing is a high-performance, 50W luminaire for applying dynamic color to multi-story facades and structures. It offers a wide array of options including a choice of optics for floodlighting or accent lighting; RGB, RGBW or RGBA color mixing; various mounting options, accessories, spread lenses and controls.

Features

Color and Color Temperature	Additive RGB, Additive RGB + white 4000K, Additive RGB + amber
Optics (nominal distribution)	6°, 10°, 20°, 40°, 60°
Optical Option	Linear spread lens horizontal distribution, Linear spread lens vertical distribution
Options	Short Yoke, 3G ANSI C136.31 Vibration Rating for bridge applications, Corrosion-resistant coating for hostile environments
Power Consumption	50 W
Warranty	5-year limited warranty

Performance

Delivered Output	1,795 lm (RGB full output, VN optic), 2,233 lm (RGBW full output, VN optic), 1,690 lm (RGBA full output, Vn optic)
Delivered Intensity	72,904 cd at nadir (RGB full output, VN optic), 93,100 cd at nadir (RGBW full output, VN optic), 66,141 cd at nadir (RGBA full output, optic VN)
Color Consistency	2 SDCM
Lumen Maintenance	L70 120,000 hrs (Ta 25 °C)

lumenpulse™
1220 Marie-Victorin Blvd., Longueuil, QC J4G 2H9 CA T 1.877.937.3003 | 514.937.3003 F 514.937.6289
info@lumenpulse.com www.lumenpulsegroup.com

Lumenpulse Group Inc. reserves the right to make changes to this product at any time without prior notice and such modification shall be effective immediately
2017.11.28 copyright © 2017 Lumenpulse Group Inc.
MG - R31

Physical

Housing Material	Low copper content high pressure die-cast aluminum
Yoke Material	Heavy aluminum (standard yoke included)
Lens Material	Clear tempered glass
Hardware Material	Stainless steel
Gasket Material	Silicone
Surface Finish	Electrostatically applied polyester powder coat
Weight	12 lbs
EPA	Front = 0.94 sq ft, Side = 0.56 sq ft

Electrical and control

Voltage	100 to 277 volts
Fixture Cable	Power and data in 1 cable, 3 ft cord standard (#16-5), other lengths available
Resolution (DMX/RDM)	Per fixture, 8-bit or 16-bit, 3 channels (RGB) or 4 channels (RGBW, RGBA)
Control	Lumentalk, DMX/RDM enabled

Environmental

Operating Temperature	-13 °F to 122 °F
IP Rating	IP66
IK Rating	IK10

Accessories (order separately)

Control Boxes	Power and control box - daisy chain configuration, Power and control box - star configuration
Control Systems	Lumentouch 2.0™, Lumencue, Lumentone
Diagnostic and Addressing Tools	LumenID, LumentalkID

lumenpulse™

1220 Marie-Victorin Blvd., Longueuil, QC J4G 2H9 CA T 1.877.937.3003 | 514.937.3003 F 514.937.6289
info@lumenpulse.com www.lumenpulsegroup.com

Lumenpulse Group Inc. reserves the right to make changes to this product at any time without prior notice and such modification shall be effective immediately
2017.11.28 copyright © 2017 Lumenpulse Group Inc.
MG - R31

Mounting options

SY - Short yoke

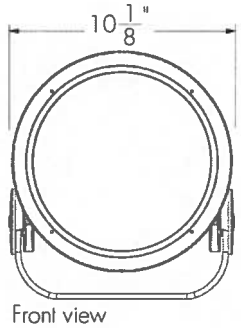

Front view

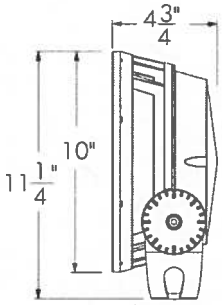

Side view

Mounting details

Mounting hole pattern - standard and short yoke

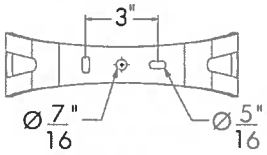

Adjustable pivot limits

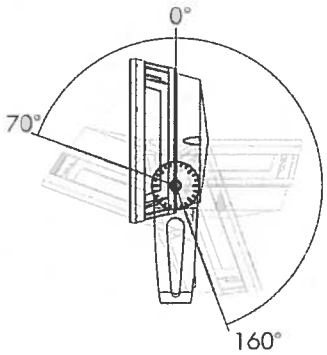

Standard yoke

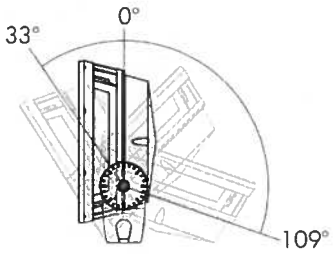

Short yoke

Optical options

LSLH - Linear spread lens horizontal distribution
LSLV - Linear spread lens vertical distribution

LSLH

LSLV

	Beam angle with LSLH/LSLV
VN	8° x 60°
NS	9° x 60°
NF	18° x 65°
FL	32° x 72°

Factory installed, not adjustable on site. Not available for WFL optic.
See 'Optical Accessories' section for field adjustable spread lens (LSLA).

lumenpulse™

1220 Marie-Victorin Blvd., Longueuil, QC J4G 2H9 CA T 1.877.937.3003 | 514.937.3003 F 514.937.6289
info@lumenpulse.com www.lumenpulsegroup.com

Lumenpulse Group Inc. reserves the right to make changes to this product at any time without prior notice and such modification shall be effective immediately
2017.11.28 copyright © 2017 Lumenpulse Group Inc.

Mounting accessories (order separately)

Round pole mounting accessory

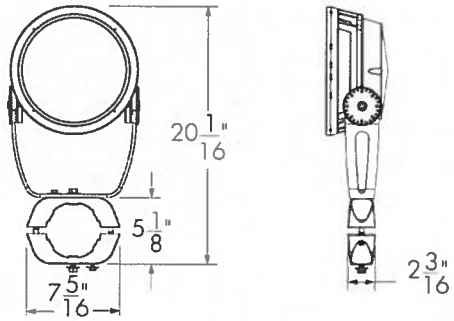

PM4 model shown.
Consult factory for square pole section.

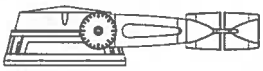

PM4-1, PM4.5-1, PM5-1 - Round pole mounting accessory - single fixture

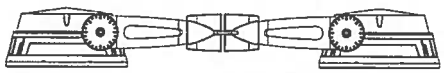

PM4-2, PM4.5-2, PM5-2 - Round pole mounting accessory - twin fixures
*One bracket assembly is supplied per 2 fixtures unless otherwise specified.

	PM4	PM4.5	PM5
For pole Ø	4" ± 1/16"	4.5" ± 1/16"	5" ± 1/16"

Consult factory for other pole diameters.

Tenon adapter

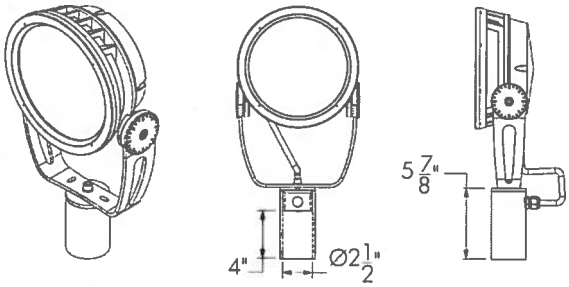

TN2 - Tenon adapter to fit on 2 3/8 in O.D. tenon

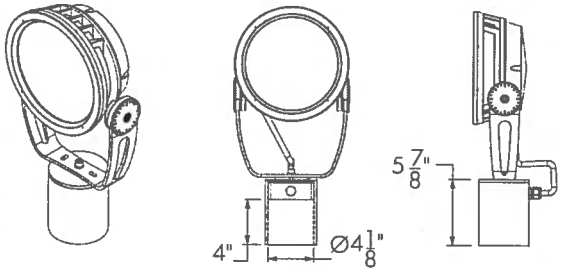

TN4 - Tenon adpater to fit on 4 in O.D. tenon

lumenpulse™
1220 Marie-Victorin Blvd., Longueuil, QC J4G 2H9 CA T 1.877.937.3003 | 514.937.3003 F 514.937.6289
info@lumenpulse.com www.lumenpulsegroup.com

Lumenpulse Group Inc. reserves the right to make changes to this product at any time without prior notice and such modification shall be effective immediately
2017.11.28 copyright © 2017 Lumenpulse Group Inc.
MG - R31

Optical accessories (order separately)

Installed optical accessories will affect the maximum pivot limits for each mounting option, consult factory for details.

SN - Snoot

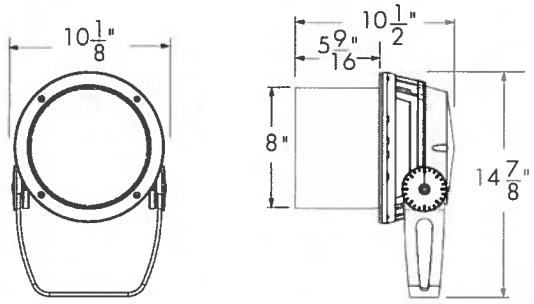

LBLSN-FINISH-BK
Interior surface painted black. Please specify desired exterior FINISH from list of available finishes.

SNW - Snoot wide

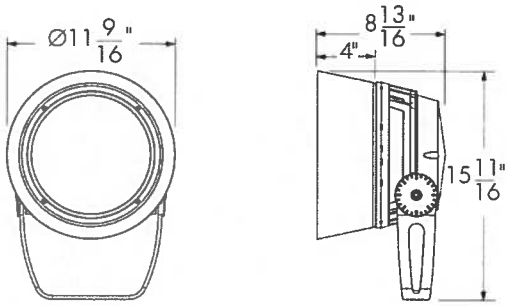

LBLSNW-FINISH-BK
Interior surface painted black. Please specify desired exterior FINISH from list of available finishes.

VS - Visor

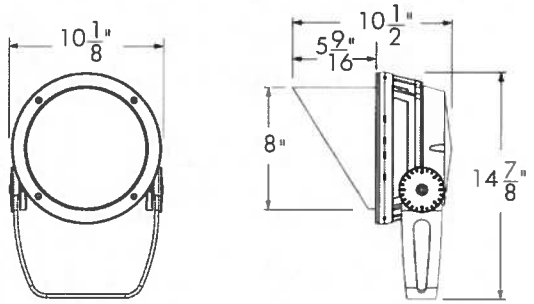

LBLVS-FINISH-BK
Interior surface painted black. Please specify desired exterior FINISH from list of available finishes.

LSLA - Linear spread lens adjustable

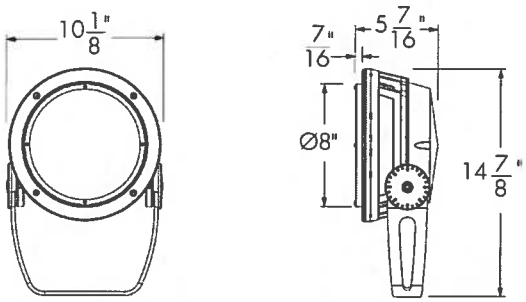

LBLLSLA-FINISH
Please specify desired exterior FINISH from list of available finishes.

WG - Wire guard

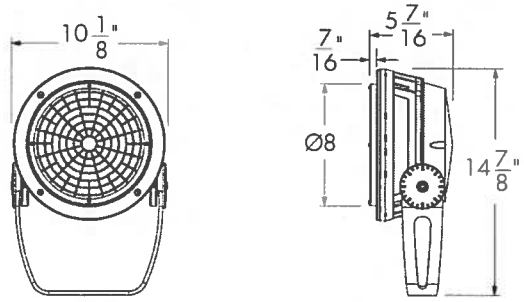

LBLWG-FINISH
Please specify desired exterior FINISH from list of available finishes.

Accessory combinations

+	Snoot	Snoot wide	Visor
Linear spread lens adjustable	YES	NO*	YES
Wire guard	YES	NO	YES

Accessory combinations must be ordered together on a single line
Ex: A snoot + wire guard combination order code is LBLSNWG-BK-BK.
*Consult factory for a linear spread lens adjustable + snoot wide combination.

lumenpulse™
1220 Marie-Victorin Blvd., Longueuil, QC J4G 2H9 CA T 1.877.937.3003 | 514.937.3003 F 514.937.6289
info@lumenpulse.com www.lumenpulsegroup.com

Lumenpulse Group Inc. reserves the right to make changes to this product at any time without prior notice and such modification shall be effective immediately
2017.11.28 copyright © 2017 Lumenpulse Group Inc.

Available exterior finishes for optical accessories

BK - Black Sandtex®
BRZ - Bronze Sandtex®
SI - Silver Sandtex®
WH - Smooth white
BKTX - Textured black
BRZTX - Textured bronze, non-metallic
GRATX - Textured medium gray
GRNTX - Textured green
WHTX - Textured white
CC - Custom color and finish (please specify RAL color)*

*Lumenpulse offers a wide selection of RAL CLASSIC (K7) colors with a smooth texture and high-gloss finish. Please consult factory for a list of available K7 colors, other RAL textures and glosses, or to match alternate color charts. Final color matching results may vary.

1220 Marie-Victorin Blvd., Longueuil, QC J4G 2H9 CA T 1.877.937.3003 | 514.937.3003 F 514.937.6289
info@lumenpulse.com www.lumenpulsegroup.com

Lumenpulse Group Inc. reserves the right to make changes to this product at any time without prior notice and such modification shall be effective immediately
2017.11.28 copyright © 2017 Lumenpulse Group Inc.
MG - R31

Typical wiring diagrams

Wiring color code

UL Color Code	USE
Green	Ground
Black	Live 100-277V
White	Neutral
Red/Purple	0-10V / Data +
Orange	0-10V / Data -

Lumentalk (LT)

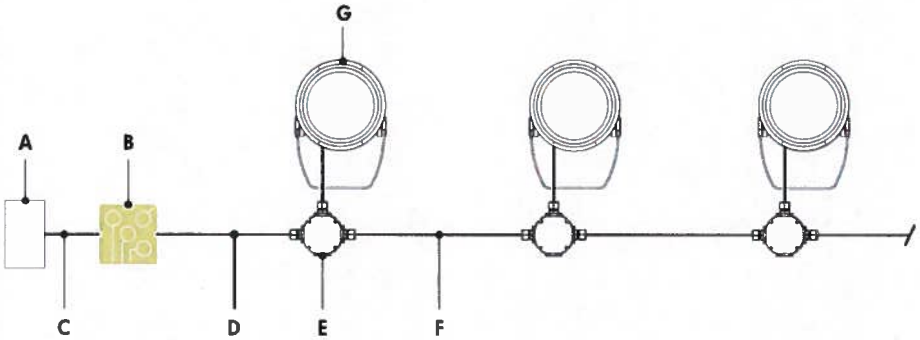

A - Third party DMX/RDM controller
B - Lumentranslator (LTL-DMX)
C - Data wiring (by others)
D - Power line (120-277V AC)
E - Junction box (by others)
F - Power wiring (by others)
G - Lumenbeam Large

Lumentalk (LT) - wiring detail

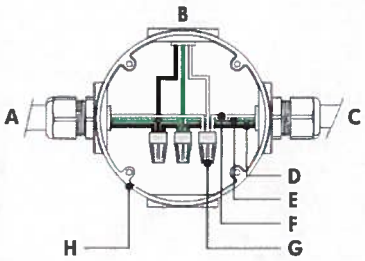

A - Power input (control over power line via Lumentalk system) or from previous fixture
B - To fixture
C - To next fixture
D - Live
E - Ground
F - Neutral
G - Wire-nuts (by others)
H - Junction box (by others)

- Consult factory for specific applications and maximum fixture count/cable length recommendations.
- Lumentalk enabled fixtures must be commissioned using LumentalkID software and a LID-LT. Consult factory for details.
- Maximum of 1 transmitter (Lumentranslator or Lumenlink) per system.
- No third party fixtures allowed on the same circuit.
- 1 DMX controller per Lumentalk network, maximum of 48 DMX channels per Lumentalk network (minimum step transition update rate is 1 second, minimum fade time between two colors is 1 minute). Consult factory for applications that require additional capabilities.
- 50 watts per fixture.

lumenpulse™
1220 Marie-Victorin Blvd., Longueuil, QC J4G 2H9 CA T 1.877.937.3003 | 514.937.3003 F 514.937.6289
info@lumenpulse.com www.lumenpulsegroup.com

Lumenpulse Group Inc. reserves the right to make changes to this product at any time without prior notice and such modification shall be effective immediately
2017.11.28 copyright © 2017 Lumenpulse Group Inc.

Star Layout (DMX/RDM)

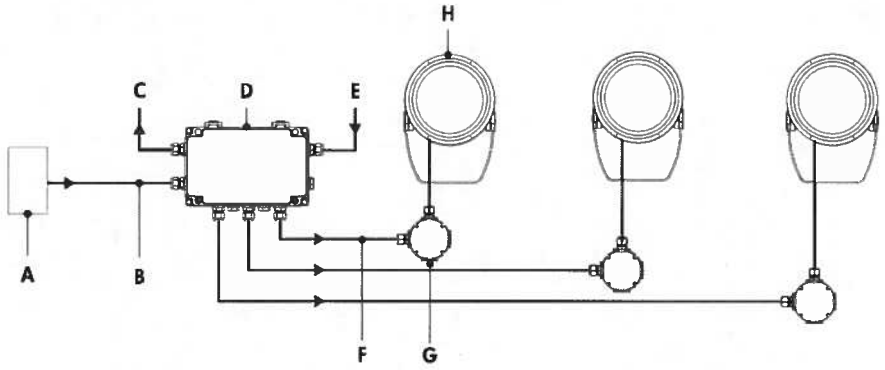

A - Third party DMX/RDM controller
B - Data input (Belden 9841 or equivalent, by others)
C - Data output to next CBX (optional, not isolated/not boosted)
D - CBX-ST
E - Power input (100-277V)
F - Power and data output to fixture (wiring by others)
G - Junction box (by others)
H - Lumenbeam Large

Star Layout (DMX/RDM) - wiring detail

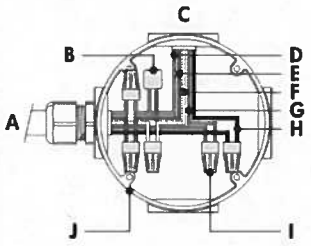

A - From CBX or previous fixture
B - Lumenterminator*
C - To fixture
D - Data -
E - Data +
F - Neutral
G - Ground
H - Live
I - Wire nuts (by others)
J - Junction box (by others)

Maximum number of fixtures per run (Based on15A maximum, 16AWG cable, fixtures spaced 10ft on center, first fixture 50ft from CBX)				
Configuration/Voltage	**120V**	**208V**	**240V**	**277V**
LBL	18	28	32	32

- Consult factory for specific applications and maximum fixture count/cable length recommendations.
- The DMX/RDM protocol states a maximum of 32 DMX/RDM enabled fixtures on any single run.
- Maximum of 4 DMX/RDM repeaters/CBX cascading in line.
- Maximum of 6 outputs per CBX-ST.
- RGB color mixture option requires 3 DMX addresses. RGBW color mixture option requires 4 DMX addresses. RGBA color mixture option requires 4 DMX addresses.
- 50 watts per fixture.

* DMX terminator is required at the end of each run to maintain data integrity. (6x) DMX lumenterminators included per CBX-ST. See installation instructions for details.

lumenpulse™
1220 Marie-Victorin Blvd., Longueuil, QC J4G 2H9 CA T 1.877.937.3003 | 514.937.3003 F 514.937.6289
info@lumenpulse.com www.lumenpulsegroup.com

Lumenpulse Group Inc. reserves the right to make changes to this product at any time without prior notice and such modification shall be effective immediately
2017.11.28 copyright © 2017 Lumenpulse Group Inc.

Daisy Chain Layout (DMX/RDM)

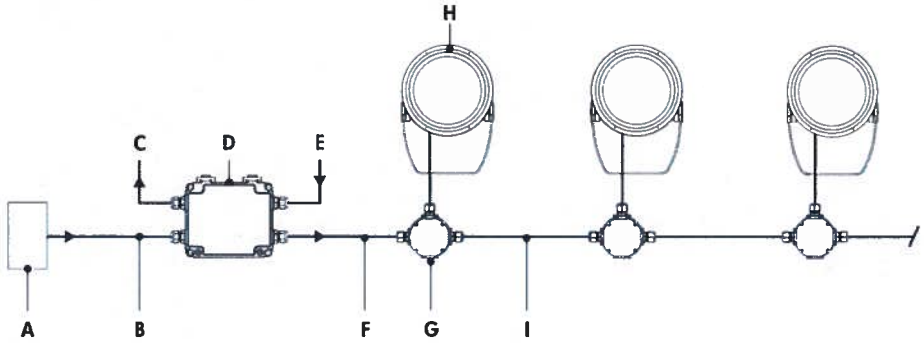

A - Third party DMX/RDM controller
B - Data input (Belden 9841 or equivalent, by others)
C - Data output to next CBX (optional, not isolated/not boosted)
D - CBX-DS
E - Power input (100-277V)
F - Power and data output to fixture (wiring by others)
G - Junction box (by others)
H - Lumenbeam Large
I - Power and data wiring (by others)

Daisy Chain Layout (DMX/RDM) - wiring detail (first or middle of run)

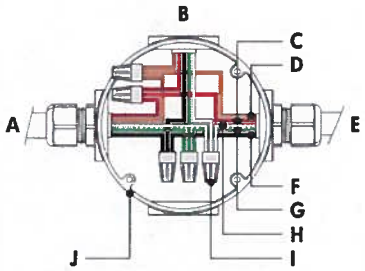

A - From CBX or previous fixture
B - To fixture
C - Data +
D - Data -
E - To next/from previous fixture
F - Live
G - Ground
H - Neutral
I - Wire-nuts (by others)
J - Junction box (by others)

Daisy Chain Layout (DMX/RDM) - wiring detail (end of run)

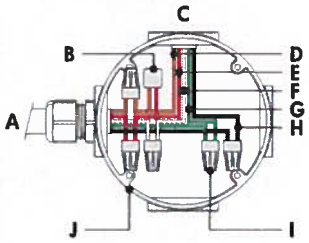

A - From CBX or previous fixture
B - Lumenterminator*
C - To fixture
D - Data -
E - Data +
F - Neutral
G - Ground
H - Live
I - Wire-nuts (by others)
J - Junction box (by others)

Maximum number of fixtures per run (Based on15A maximum, 16AWG cable, fixtures spaced 10ft on center, first fixture 50ft from CBX)				
Configuration/Voltage	**120V**	**208V**	**240V**	**277V**
LBL	18	28	32	32

- Consult factory for specific applications and maximum fixture count/cable length recommendations.
- The DMX/RDM protocol states a maximum of 32 DMX/RDM enabled fixtures on any single run.
- Maximum of 4 DMX/RDM repeaters/CBX cascading in line.
- Maximum of 1 output per CBX-DS.
- Maximum of 3 ft cable length between fixture and next junction box for daisy chain layout.
- RGB color mixture option requires 3 DMX addresses. RGBW color mixture option requires 4 DMX addresses. RGBA color mixture option requires 4 DMX addresses.
- 50 watts per fixture.

* DMX terminator is required at the end of each run to maintain data integrity. (2x) DMX lumenterminators included per CBX-DS. See installation instructions for details.

lumenpulse™
1220 Marie-Victorin Blvd., Longueuil, QC J4G 2H9 CA T 1.877.937.3003 | 514.937.3003 F 514.937.6289
info@lumenpulse.com www.lumenpulsegroup.com

Lumenpulse Group Inc. reserves the right to make changes to this product at any time without prior notice and such modification shall be effective immediately
2017.11.28 copyright © 2017 Lumenpulse Group Inc.

Accessories (order separately)

Control Boxes

CBX-DS-Power and control box - daisy chain configuration

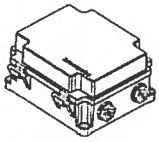

DMX/RDM control box. One power and data output to fixture or fixture run. Ethernet enabled option. Refer to CBX specification sheet for details.

CBX-ST-Power and control box - star configuration

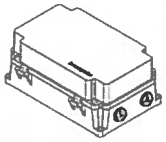

DMX/RDM control box. Up to six power and data outputs to fixtures or fixture runs. Ethernet enabled option. Refer to CBX specification sheet for details.

Control Systems

LTO2-Lumentouch 2.0™

Lumentouch is a wall mount DMX 512 controller keypad.

LCU-Lumencue

Lumencue is a USB / mini SD DMX 512 controller.

LTN-Lumentone

Lumentone is a simple pre-programmed DMX 512 controller with a push button rotary dial and live feedback.

Diagnostic and Addressing Tools

LID-LumenID

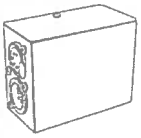

LumenID is a diagnostic and addressing DMX/RDM tool. It must be specified on all DMX applications. Refer to LID specification sheet for details.

LID-LT-LumentalkID

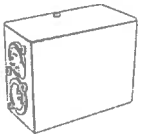

LumentalkID is a diagnostic and addressing tool. It must be specified for all Lumentalk (LT) applications. Refer to LID-LT specification sheet for details.

lumenpulse™

1220 Marie-Victorin Blvd., Longueuil, QC J4G 2H9 CA T 1.877.937.3003 | 514.937.3003 F 514.937.6289
info@lumenpulse.com www.lumenpulsegroup.com

Lumenpulse Group Inc. reserves the right to make changes to this product at any time without prior notice and such modification shall be effective immediately
2017.11.28 copyright © 2017 Lumenpulse Group Inc.
MG - R31

How to order

1	2	3	4	5	6	7	8
LBL	277	RGBW	NF			DMX/RDM	SY/TN2

9	10
UL	3 FT

1 . Housing

LBL	Lumenbeam™ Large

2 . Voltage

100	100 volts
120	120 volts
208	208 volts
220	220 volts
240	240 volts
277	277 volts

3 . Color and Color Temperature [1]

RGB	Additive RGB
RGBW	Additive RGB + white 4000K
RGBA	Additive RGB + amber

4 . Optics

VN	Very Narrow 6°
NS	Narrow Spot 10°
NF	Narrow Flood 20°
FL	Flood 40°
WFL	Wide Flood 60°

5 . Optical Option

LSLH	Linear spread lens horizontal distribution [2]
LSLV	Linear spread lens vertical distribution [2]

6 . Finish

BK	Black Sandtex®
BRZ	Bronze Sandtex®
SI	Silver Sandtex®
WH	Smooth white
BKTX	Textured black
BRZTX	Textured bronze non-metallic
GRATX	Textured medium gray
GRNTX	Textured green
WHTX	Textured white
CC	Custom color and finish (please specify RAL color) [3]

7 . Control

LT	Lumentalk [4]
DMX/RDM	DMX/RDM enabled

8 . Options

SY	Short Yoke
3GV	3G ANSI C136.31 Vibration Rating for bridge applications
CRC	Corrosion-resistant coating for hostile environments [5]

9 . Certification

UL	UL compliant
CE	CE compliant

lumenpulse™

1220 Marie-Victorin Blvd., Longueuil, QC J4G 2H9 CA T 1.877.937.3003 | 514.937.3003 F 514.937.6289
info@lumenpulse.com www.lumenpulsegroup.com

Lumenpulse Group Inc. reserves the right to make changes to this product at any time without prior notice and such modification shall be effective immediately
2017.11.28 copyright © 2017 Lumenpulse Group Inc.

10 . Cable Length [6]

3FT	3 ft [6] [7]
10FT	10 ft
20FT	20 ft
30FT	30 ft
50FT	50 ft
70FT	70 ft
100FT	100 ft

Notes:

[1] Consult factory for color mix with Royal Blue, 3000K or other white color temperature LEDs.

[2] Factory installed, not available for 60° optic. Field adjustable spread lens optical accessory available, order separately.

[3] Lumenpulse offers a wide selection of RAL CLASSIC (K7) colors with a smooth texture and high-gloss finish. Please consult factory for a list of available K7 colors, other RAL textures and glosses, or to match alternate color charts. Final color matching results may vary.

[4] A Lumentranslator and LumentalkID (LIDLT) must be specified for Lumentalk applications. Consult Lumentranslator and Lumentalk pages and specification sheets for details.

[5] Use only when exposed to salt spray and harsh chemicals. This option is not required for normal outdoor exposure.

[6] 3 ft cable length is standard unless otherwise specified.

[7] Maximum of 3 ft cable length for daisy chain DMX applications with CBX-DS.

lumenpulse™

1220 Marie-Victorin Blvd., Longueuil, QC J4G 2H9 CA T 1.877.937.3003 | 514.937.3003 F 514.937.6289
info@lumenpulse.com www.lumenpulsegroup.com

Lumenpulse Group Inc. reserves the right to make changes to this product at any time without prior notice and such modification shall be effective immediately
2017.11.28 copyright © 2017 Lumenpulse Group Inc.

Specification Sheet

lumentouch 2.0™

Client Cspire **Project name** _____

Order# _____ **Type** Color Control **Qty** 1

FEATURES AND BENEFITS

- Flat wall mounted lighting controller
- Can be used without a computer in stand alone mode
- Universal mounting plate compatible with most electrical backboxes
- MINI-USB connection for software programming
- Touch sensitive control panel
- 2 DMX universes (1024 channels)
- Unlimited memory via Micro SDCARD
- Integrated clock/calendar
- RS 232 serial and I/O ports
- Universal infrared receiver
- Standard with ETHERNET card

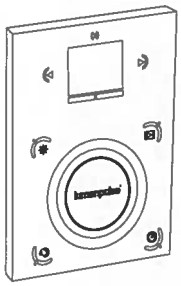

PACKAGE CONTENT

- Lumentouch hardware (stand alone wall mounted DMX controller)
- Mini-USB cable
- Micro SDCARD and adapter
- UL listed 6-7V DC power supply (100-240V AC input voltage) with connector block for DMX connection
- Compatible with Windows (XP, VISTA and 7, 32-bit or 64-bit)
- PDF User manual available for download on the Lumenpulse website
- Troubleshooting Tips document available for download on the Lumenpulse website
- Lumenstudio programming software available for download on the Lumenpulse website (Hardware manager is part of the Lumenstudio Software download)

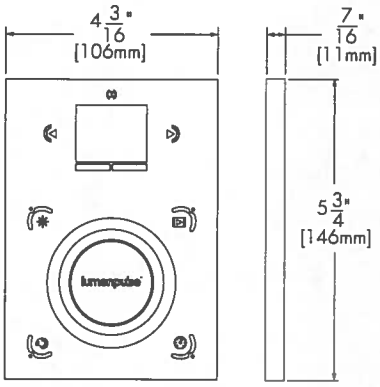

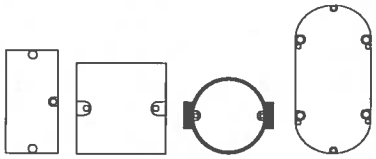

Universal back mounting plate
Hole pattern to fit most standard junction boxes
*Extended back boxes are recommended for all installations.

HOW TO ORDER

LTO2

Housing

1

* Please remove protective film before use to ensure proper operation of the controller.

© Copyright Lumenpulse 2017

1751 Richardson, Suite 1505
Montreal (Quebec) Canada
H3K 1G6

1.877.937.3003
P.514.937.3003
F. 514.937.6289
info@lumenpulse.com
www.lumenpulsegroup.com

5-year limited warranty.

Consult www.lumenpulsegroup.com for our complete Standard Terms and Conditions of Sales.

lumenpulse™ GROUP

Lumenpulse reserves the right to make changes to this product at any time without prior notice and such modification shall be effective immediately.

2017.03.30
NK - R6

CONNECTIONS

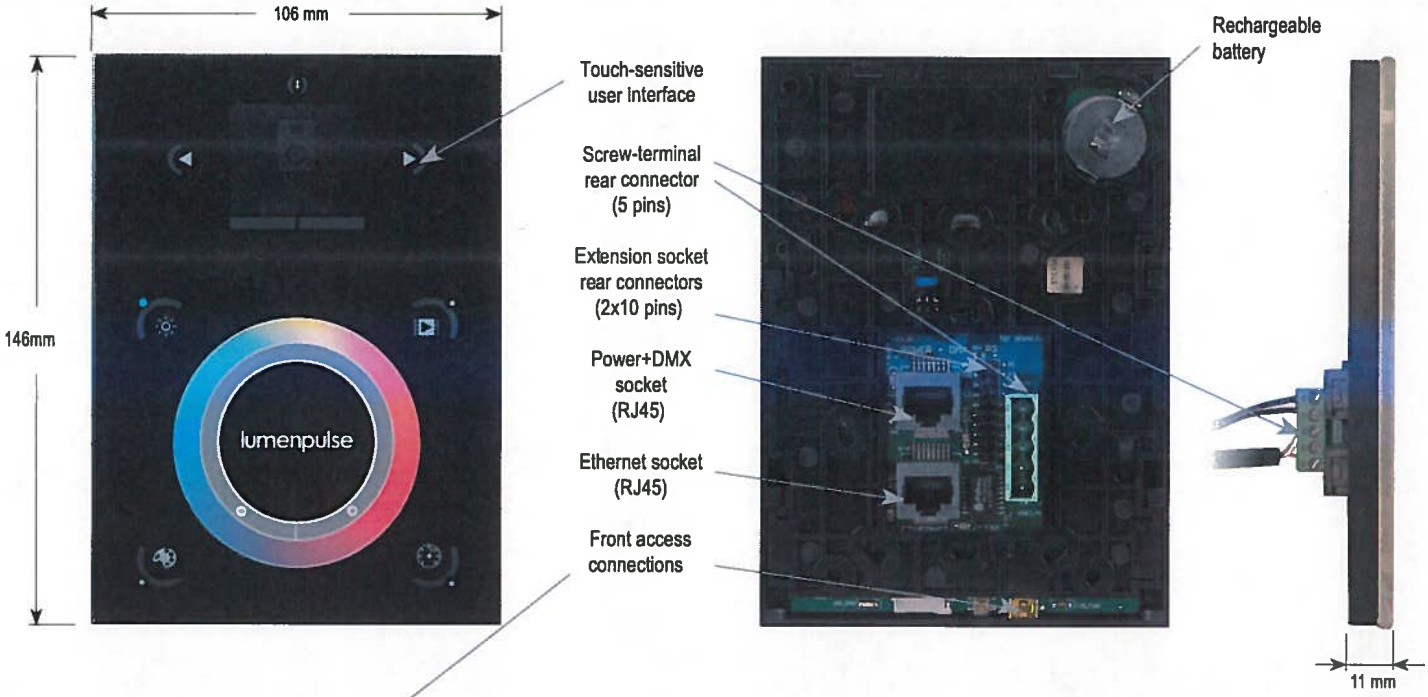

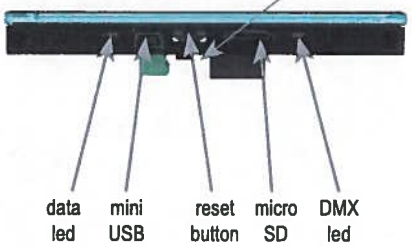

Input Power	6-7V DC 0.6A
Output Protocol	DMX512 (x2)
Programmability	PC, Mac, Tablet, Smartphone
Available colors	Black
Connections	USB, Ethernet, RS232, Clock, 8 dry contact ports, 5v Output Relay
Memory	microSD (32Gb Max)
Temperature	-10°C to 45°C
Mounting	Single or double gang wall socket
Dimensions	146 x 106 x 11mm
Weight	247g
Standards	EC, EMC, ROHS, ETL

© Copyright Lumenpulse 2017

1751 Richardson, Suite 1505
Montreal (Quebec) Canada
H3K 1G6

1.877.937.3003
P.514.937.3003
F. 514.937.6289
info@lumenpulse.com
www.lumenpulsegroup.com

5-year limited warranty.

Consult www.lumenpulsegroup.com for our complete Standard Terms and Conditions of Sales.

lumenpulse™ GROUP

Lumenpulse reserves the right to make changes to this product at any time without prior notice and such modification shall be effective immediately.

MOUNTING PATTERN

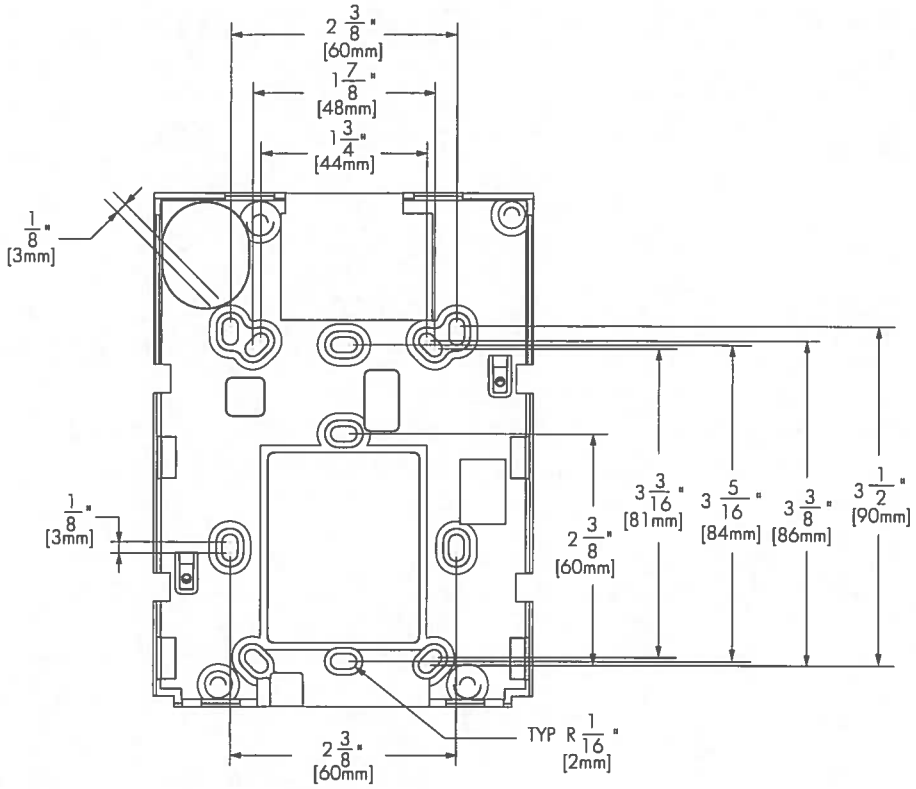

MOUNTING HOLE PATTERN

*Extended electrical back boxes are recommended for all installations

© Copyright Lumenpulse 2017

1751 Richardson, Suite 1505
Montreal (Quebec) Canada
H3K 1G6

1.877.937.3003
P.514.937.3003
F. 514.937.6289
info@lumenpulse.com
www.lumenpulsegroup.com

5-year limited warranty.

Consult www.lumenpulsegroup.com for our complete Standard Terms and Conditions of Sales.

lumenpulse™ GROUP

Lumenpulse reserves the right to make changes to this product at any time without prior notice and such modification shall be effective immediately.

INSTALLATION

1. Mount an electrical box inside the wall

The controller can be installed in any standard electrical backbox. If you use a double size box, you can insert the power supply inside.

2. Connect the wires

POWER: Connect a 6V to 7V DC 0.6A ACDC supply.
Be sure to not invert the + and the ground.

DMX: Connect the DMX cable to the lighting receivers (Leds, Dimmers, Fixtures..)
(for XLR: 1=ground 2=dmx- 3=dmx+)

Wire Identification
(From power supply to connector block)

POWER DC + (white trace wire)
POWER GROUND (black wire)

Wire Identification
(From power supply to wall plug)

VDC + (blue wire)
VDC - (brown wire)

3. Mount the interface on the wall

First, mount the back side of the interface on the wall with 2 or more screws
Secondly, plug the connectors :
- DMX and power (connector block or RJ45)
- Ethernet cable

The front panel is mounted by pressing it against the back plate and then sliding down. 2 screws should then be attached underneath to hold the controller in place.

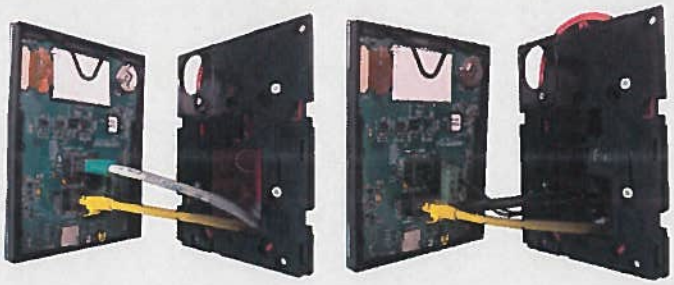

POWER+DMX
WITH THE
CONNECTOR BLOCK

POWER+DMX
WITH THE
RJ45 CABLE

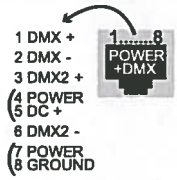

© Copyright Lumenpulse 2017

1751 Richardson, Suite 1505
Montreal (Quebec) Canada
H3K 1G6

1.877.937.3003
P.514.937.3003
F. 514.937.6289
info@lumenpulse.com
www.lumenpulsegroup.com

5-year limited warranty.

Consult www.lumenpulsegroup.com for our complete Standard Terms and Conditions of Sales.

lumenpulse™ GROUP

Lumenpulse reserves the right to make changes to this product at any time without prior notice and such modification shall be effective immediately.

EXTENSION CONNECTORS

****CHECK PIN CONFIGURATIONS. APPLYING POWER TO THE DMX INPUT WILL DAMAGE THE CONTROLLER****
****MAKE SURE THE CONTROLLER IS MOUNTED WITHOUT TOO MUCH FORCE BEHIND AS THIS CAN PUSH APART THE GLASS****
****LUMENPULSE RECOMMENDS USING A GANG BOX EXTENSION IF POSSIBLE**
TO INCREASE THE VOLUME OF THE WIRING COMPARTMENT FOR EASE OF INSTALLATION**

2x10 pins EXTENSION socket

DMX CHIP replacement

DMX universe #1

DMX universe #2

Ref: SP485ECN-L
MAX485 CSA

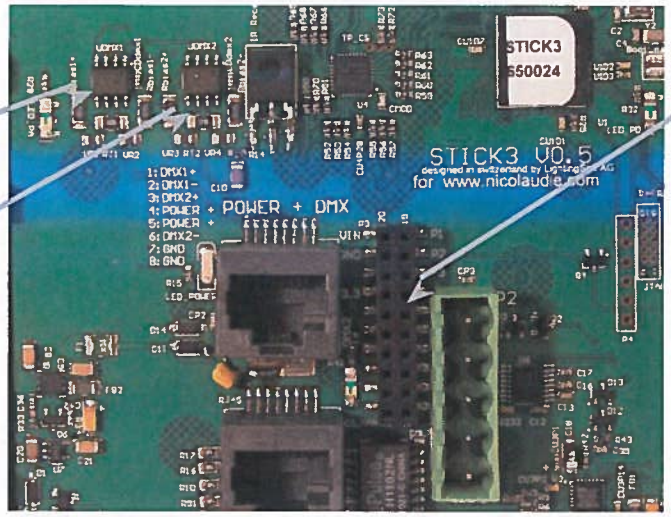

EXTENSION socket

VIN	20	19	PORT1
GND	18	17	PORT2
IR_RX	16	15	PORT3
3.3V	14	13	PORT4
Relay	12	11	PORT5
DMX2+	10	9	PORT6
DMX2-	8	7	PORT7
DMX1+	6	5	PORT8
DMX1-	4	3	RS232 RX
GND_DMX	2	1	RS232 TX

Compatible header connectors:
WURTH ELEKTRONIK ref: 61301021121
MOLEX ref: 10-89-7202
TE Connectivity ref: 1-87227-0
FCI ref: 77313-101-20LF
HARWIN ref: M20-9981046
SAMTEC ref: TSW-110-xx-T-D
FARNELL ref: 1841232
RS ref: 763-6754 673-7534 251-8165
MOUSER ref: 538-10-89-7202
DIGIKEY ref: WM26820-ND

BLACKOUT Relay (energy saving)

A relay can be connected between the RELAY and GND sockets of the 20 pin extension socket. This can be used to turn off other equipment such as lighting drivers. The signal is connected when the controller is in standby.

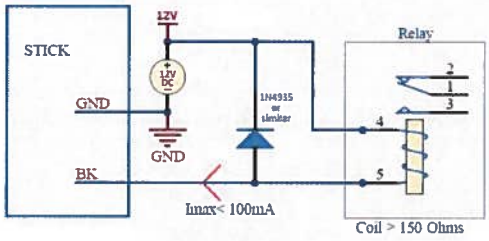

Example of relay :
FINDER Ref.
22.23.9.012.4000

RS232 triggering

Make a cable using the 3 pins : TX, RX and G (GND)
Set the RS232 parameters to : 9600bds 8 bits, no Parity, 2 Stop bits
Messages should be hexadecimal not decimal (ie. 1 = 01, 255 = ff etc.)

- To play a scene, send 4 bytes : **1 x y 255**
- To stop a scene, send 4 bytes : **2 x y 255**
- To pause a scene, send 4 bytes : **3 x y 255**
- To release a pause, send 4 bytes : **4 x y 255**
- To reset a scene, send 4 bytes : **5 x y 255**

When (y)=0, (x) can be set between 0 and 255
-to stop scene 145, send the command: 2 145 0 255
When (y)=1, (x) can be set between 0 and 243 to trigger scenes 256-499
-to play scene 300, send the command: 1 44 1 255

Dry Contact Port Triggering

It is possible to start scenes using the input ports (contact closure). To activate a port, a brief contact of at least 1/25 second must be established between the ports (1...8) and the ground (GND). Note: the scene will not be switched off when the switch is released.

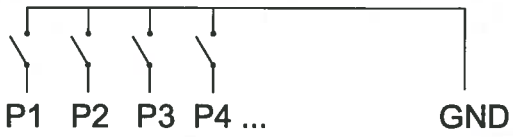

Network Control

The controller can be connected to a local network, allowing it to be controlled from a smartphone or tablet over WiFi.

- Connect the controller to a router or switch with an RJ45 cable
- The controller is set by default to get an IP address from the router via DHCP. If the network is not working with DHCP, a manual IP address and subnet mask can be set using the Hardware Manager
- If the network has a firewall enabled, allow ports 2430 and 2431

TCP Triggering

The controller can be connected to an existing automation system over a network and triggered via TCP packets on port 2431 or UDP packets on 2430. Refer to the remote protocol document for more information.

© Copyright Lumenpulse 2017

1751 Richardson, Suite 1505
Montreal (Quebec) Canada
H3K 1G6

1.877.937.3003
P.514.937.3003
F. 514.937.6289
info@lumenpulse.com
www.lumenpulsegroup.com

5-year limited warranty.

Consult www.lumenpulsegroup.com for our complete Standard Terms and Conditions of Sales.

lumenpulse™ GROUP

Lumenpulse reserves the right to make changes to this product at any time without prior notice and such modification shall be effective immediately.

SETTING UP THE CONTROLLER

iPhone/iPad/Android Control

The controller can be used with one of 3 different apps. Each available at Google Play and the App store.

DMX Lightpad 3

Designed to work seamlessly with the controller, DMX Lightpad 3 provides an easy way to control your lights over a local WiFi network. Use the wheel to change the dimmer, color or speed, and the arrows to select scenes and effects just like the wall panel. Swipe down to reveal quick access scene selection buttons.

Easy Remote

Create an entirely customized remote controller for your tablet or smartphone. Easy Remote is a powerful and intuitive app allowing you to easily add buttons, faders, color wheels and more. Connect to a WiFi network and the app will find all compatible devices.

Arcolis

The Arcolis application is a comprehensive tool allowing you to directly control and re-program the controller from your smartphone or tablet. This is a simple application which can be used by just about everyone in any situation. Mobile, easy to use and powerful, Arcolis is the ideal controller for dimming or switching traditional, LED and RGB color mixing DMX lighting fixtures. Program static and dynamic lighting scenes and effects. Arcolis is compatible with Android devices only.

Programming the Controller

The controller be programmed from a PC using the software available on our website.
Refer to the corresponding user manual for more information. The firmware can be updated using the Hardware Manager which is included with the programming software.

Lumenstudio Software and hardware (Windows)
http://www.lumenpulsegroup.com/products/128/lumentouch-20

© Copyright Lumenpulse 2017

1751 Richardson, Suite 1505
Montreal (Quebec) Canada
H3K 1G6

1.877.937.3003
P.514.937.3003
F. 514.937.6289
info@lumenpulse.com
www.lumenpulsegroup.com

5-year limited warranty.

Consult www.lumenpulsegroup.com for our complete Standard Terms and Conditions of Sales.

lumenpulse™ GROUP

Lumenpulse reserves the right to make changes to this product at any time without prior notice and such modification shall be effective immediately.

Specification Sheet

CBX™

CONTROL BOX FOR LINE VOLTAGE FIXTURES

Client _____ **Project name** Cspire

Order# _____ **Type** CBX **Qty** 3

Physical :

- Die-cast aluminum enclosure
- Two compartments: base for connections and cover for electronics
- Wall partition for separation of circuits
- Hinged cover with safety cable
- Electro-statically applied polyester powder coat finish
- Data input, 1/2" provision holes for 1/2" NPT, PG16 or 20mm
- Power input, 1/2" provision holes for 1/2" NPT, PG16 or 20mm
- Up to six outputs, 1/2" provision holes for 1/2" NPT, PG16 or 20mm
- Mounting detail on the bottom of the box
- TX & RX indicator LED lights for troubleshooting
- Onboard data termination switch
- Onboard test button
- Operating temperatures: -25°C to 50°C [-13F to 122F]
- Storage temperatures: -40°C to 85°C [-40F to 185F]
- Weight: small housing - 1.70 kg / 3.75 lbs, large housing - 3.61 kg / 7.95 lbs
- Suitable for indoor and outdoor applications, IP66
- Meets 3G ANSI C136.31 Vibration standard for bridge applications
- Optional corrosion-resistant coating for hostile environments*

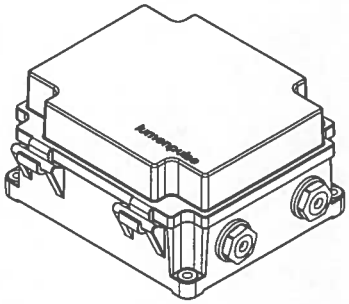

*UL listed watertight strain relief connectors and cables by others.

Seal all possible water entry points with RTV silicone (pressure glands, conduit). Sealing compound by others.

Electrical :

- 100 to 347V input
- DMX/RDM enabled

Related Products:

DMX dimming, Dynamic White and Color Changing for:
Lumenbeam Family
Lumenfacade Family
Lumencove Family
Lumenline Family

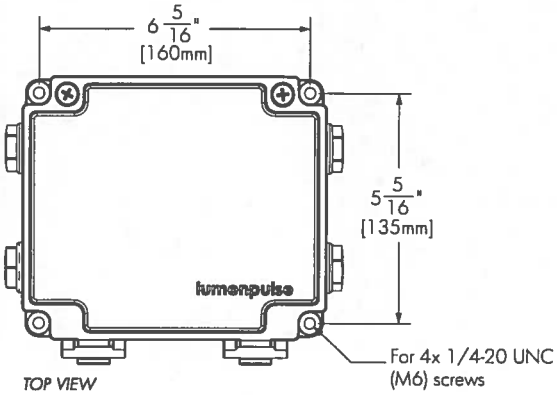

TOP VIEW

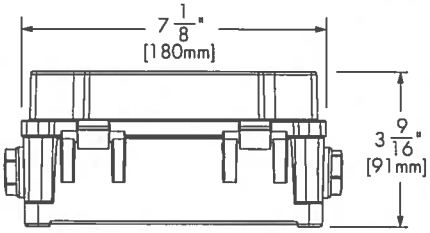

FRONT VIEW
SMALL HOUSING SHOWN (CBX-DS, 100-277V configuration)

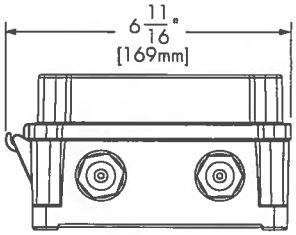

SIDE VIEW

* Use only when exposed to salt spray and harsh chemicals. This option is not required for normal outdoor exposure!

© Copyright lumenpulse Group Inc. 2018

1220 Marie-Victorin Boulevard
Longueuil (Quebec) Canada
J4G 2H9
1.877.937.3003
P. 514.937.3003
F. 514.937.6289
info@lumenpulse.com **www.lumenpulse.com**

5-year limited warranty.

Consult www.lumenpulse.com for our complete Standard Terms and Conditions of Sales.

lumenpulse™

Lumenpulse Group Inc. reserves the right to make changes to this product at any time without prior notice and such changes shall be effective immediately.

2018.02.06
NK - R13

DIMENSIONS - LARGE HOUSING

CBX-DS 347V, CBX-ST 100-347V

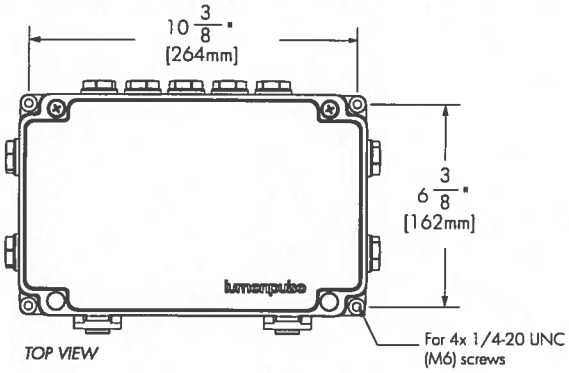

TOP VIEW

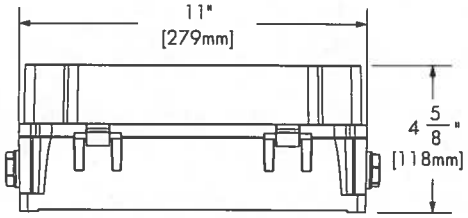

FRONT VIEW

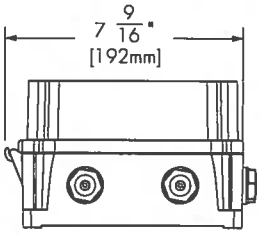

SIDE VIEW

DIMENSIONS - OPEN HOUSING

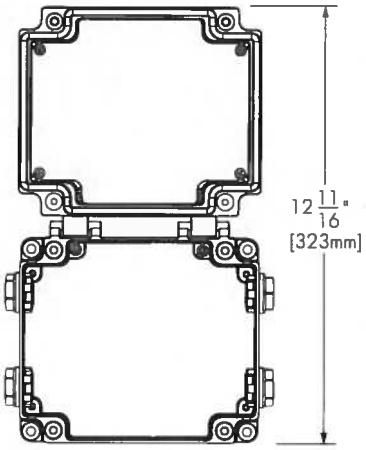

SMALL HOUSING

DS - Daisy Chain Configuration, 100-277V

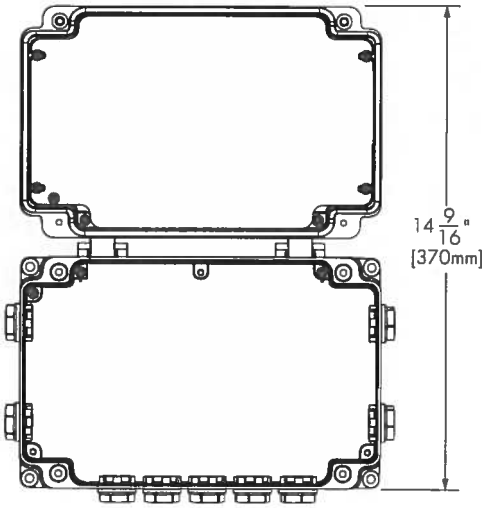

LARGE HOUSING

DS - Daisy Chain Configuration, 347V
ST - Star Configuration, 100-347V

© Copyright Lumenpulse Group Inc. 2018

1220 Marie-Victorin Boulevard
Longueuil (Quebec) Canada
J4G 2H9

1.877.937.3003
P. 514.937.3003
F. 514.937.6289

info@lumenpulse.com **www.lumenpulse.com**

5-year limited warranty.

Consult www.lumenpulse.com for our complete Standard Terms and Conditions of Sales.

lumenpulse™

Lumenpulse Group Inc. reserves the right to make changes to this product at any time without prior notice and such changes shall be effective immediately.

INPUT AND OUTPUT DETAILS

CBX-DS, 100-277V CONFIGURATION

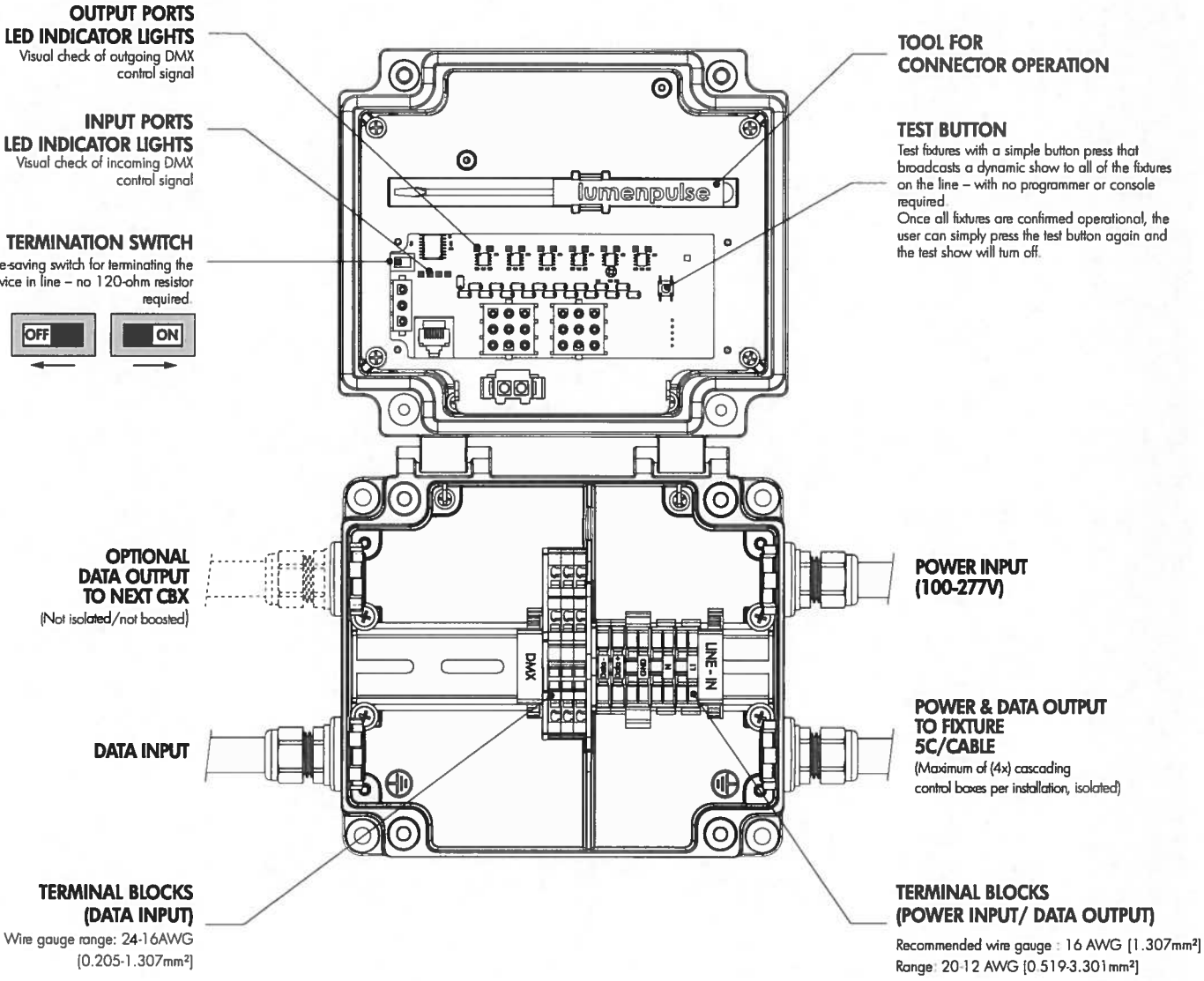

© Copyright Lumenpulse Group Inc. 2018

1220 Marie-Victorin Boulevard
Longueuil (Quebec) Canada
J4G 2H9

1.877.937.3003
P. 514.937.3003
F. 514.937.6289

info@lumenpulse.com **www.lumenpulse.com**

5-year limited warranty.

Consult www.lumenpulse.com for our complete Standard Terms and Conditions of Sales.

lumenpulse™

Lumenpulse Group Inc. reserves the right to make changes to this product at any time without prior notice and such changes shall be effective immediately.

INPUT AND OUTPUT DETAILS - continued

CBX-DS, 347V CONFIGURATION

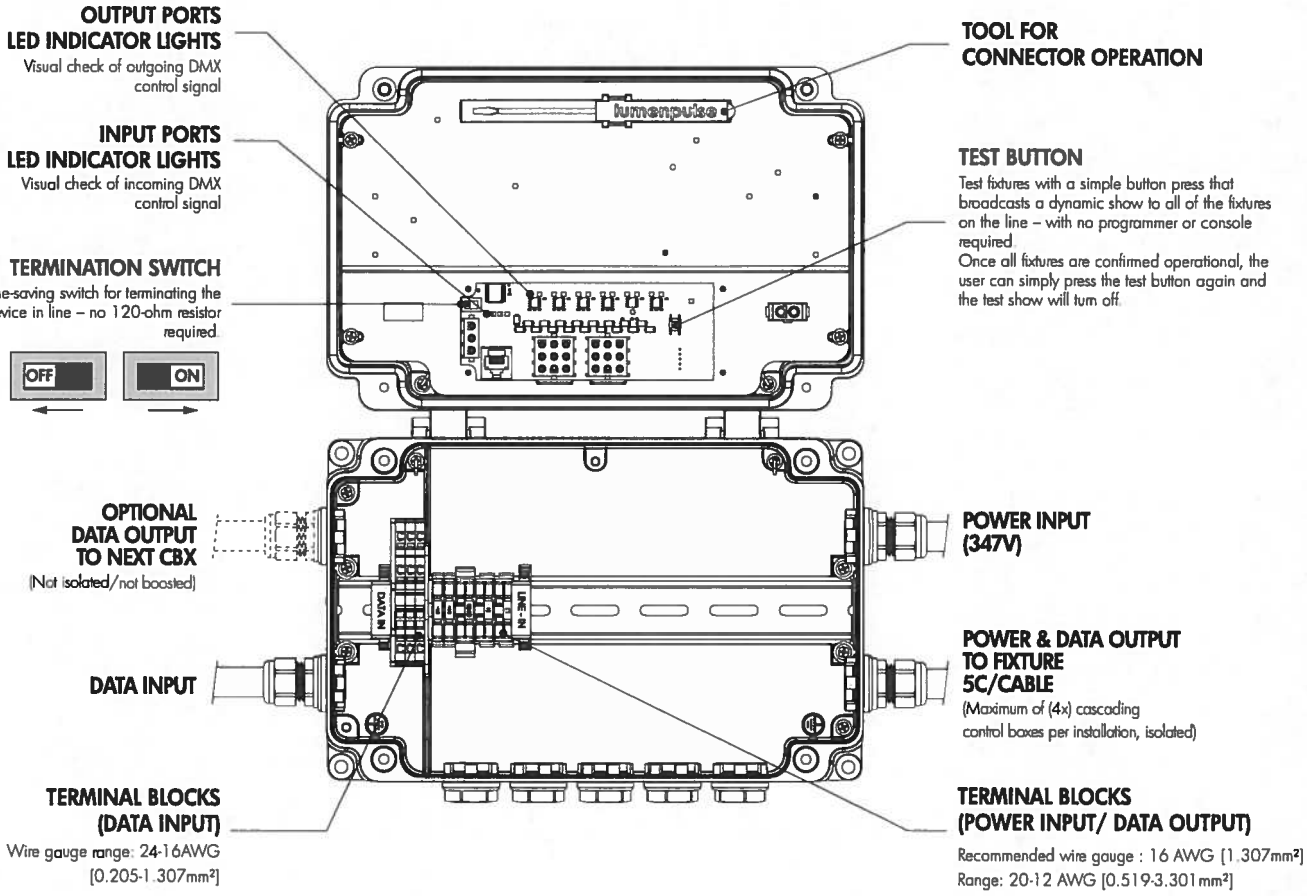

© Copyright Lumenpulse Group Inc. 2018

1220 Marie-Victorin Boulevard
Longueuil (Quebec) Canada
J4G 2H9

1.877.937.3003
P. 514.937.3003
F. 514.937.6289

info@lumenpulse.com **www.lumenpulse.com**

5-year limited warranty.

Consult www.lumenpulse.com for our complete Standard Terms and Conditions of Sales.

lumenpulse™

Lumenpulse Group Inc. reserves the right to make changes to this product at any time without prior notice and such changes shall be effective immediately.

INPUT AND OUTPUT DETAILS - continued

CBX-ST, 100-347V CONFIGURATION

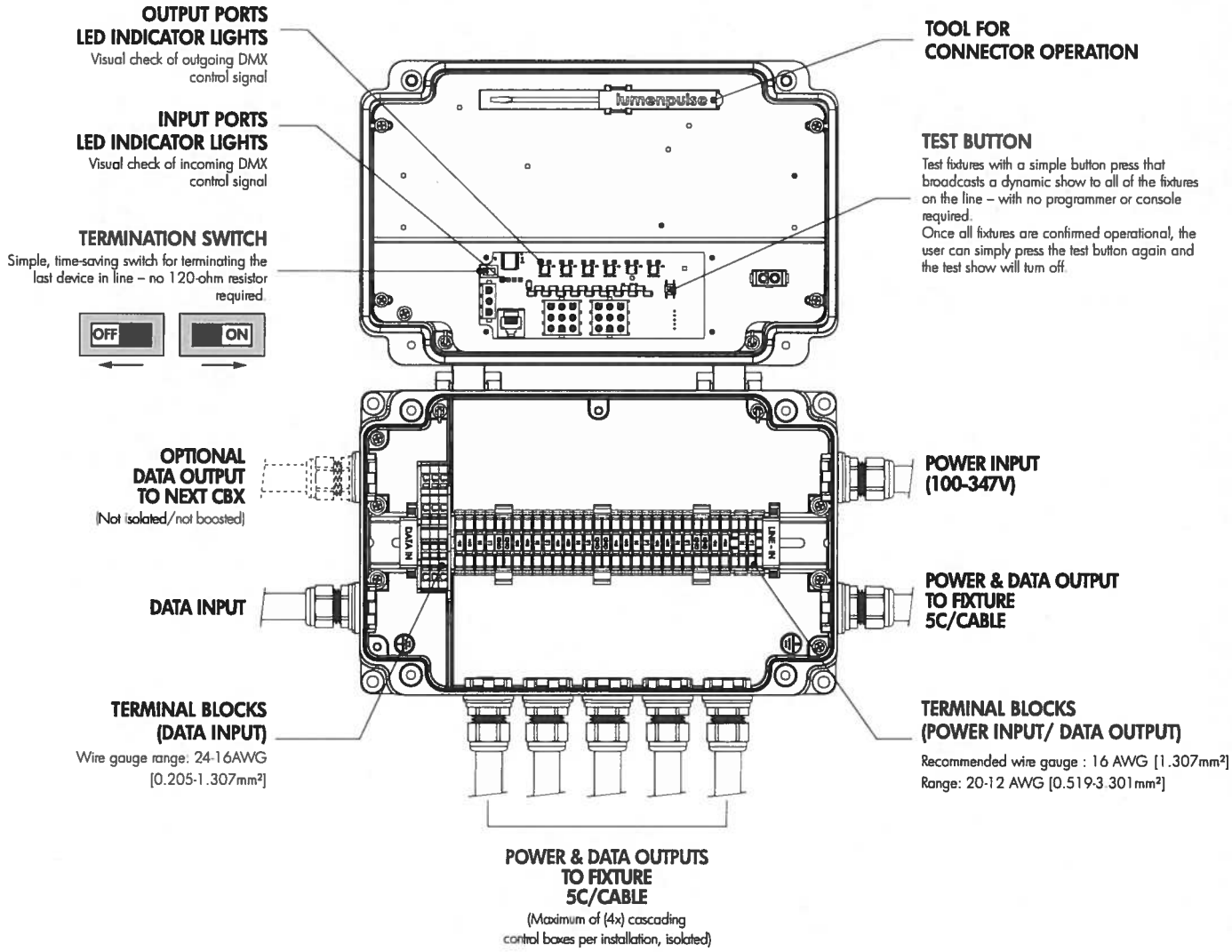

© Copyright Lumenpulse Group Inc. 2018

1220 Marie-Victorin Boulevard
Longueuil (Quebec) Canada
J4G 2H9
1.877.937.3003
P. 514.937.3003
F. 514.937.6289
info@lumenpulse.com **www.lumenpulse.com**

5-year limited warranty.

Consult www.lumenpulse.com for our complete Standard Terms and Conditions of Sales.

lumenpulse™

Lumenpulse Group Inc. reserves the right to make changes to this product at any time without prior notice and such changes shall be effective immediately.

HOW TO ORDER

CBX- Select:	Select:	DMX/RDM	Select:	Select:
1	2	3	4	5

1

Housing:

CBX-DS - Power and Control box, Daisy Chain Configuration (1 output)
CBX-ST - Power and Control box, Star Configuration (Up to 6 outputs)

2

Voltage Input:

100 - 100 volts
120 - 120 volts
208 - 208 volts
220 - 220 volts
240 - 240 volts
277 - 277 volts
347 - 347 volts[1]

3

Control:

DMX/RDM - DMX/RDM enabled

4

Finish:

BK - Black Sandtex®
BRZ - Bronze Sandtex®
SI - Silver Sandtex®
WH - Smooth white
BKTX - Textured black
BRZTX - Textured bronze non-metallic
GRATX - Textured medium gray
GRNTX - Textured green
WHTX - Textured white
CC - Custom color and finish (please specify RAL color)[2]

5

Option:

CRC - Corrosion-resistant coating for hostile environments

Related Products:

DMX dimming, Dynamic White and Color Changing in Lumenbeam, Lumenfacade, Lumencove and Lumenline families.

Notes:

[1] Consult fixture specification sheets for 347V availability. [2] North American RAL colors specified with RAL number only are provided with a smooth/high-gloss finish. Please consult factory for other RAL textures and glosses, or to match alternate color charts. Final color matching results may vary.

© Copyright Lumenpulse Group Inc. 2018

1220 Marie-Victorin Boulevard
Longueuil (Quebec) Canada
J4G 2H9
1.877.937.3003
P. 514.937.3003
F. 514.937.6289
info@lumenpulse.com **www.lumenpulse.com**

5-year limited warranty.

Consult www.lumenpulse.com for our complete Standard Terms and Conditions of Sales.

lumenpulse™

Lumenpulse Group Inc. reserves the right to make changes to this product at any time without prior notice and such changes shall be effective immediately.

MINUTES OF A MEETING OF THE ARCHITECTURAL REVIEW BOARD OF THE CITY OF RIDGELAND, MISSISSIPPI

A meeting of the Architectural Review Board of the City of Ridgeland, Mississippi, (the "Board"), was duly called, held, and conducted on Tuesday, May 22, 2018, at 6:00 o'clock P.M. in the Ridgeland City Hall in the City of Ridgeland, Madison County, Mississippi.

The following members were present, to-wit:
Bill Dicken, Chairman
Connie Suber
Randy Lynn
Lynette Praytor
Ron Blaylock

Members Absent:
Glenn Ray
David Dunbar
Randy Knouse

Also attending:
Jordan Lohman, City Planner

The meeting was called to order by Chairman Dicken. Chairman Dicken led the invocation. It was determined by the members present that there was a quorum.

The first item on the agenda was **CSPIRE LIGHTING.** The project was presented by **Mr. Jason Ellis** with **Ellis Construction Services**. The project is located at **1018 Highland Colony Parkway.** The applicant is requesting approval to add color changing lights to the exterior of the building.

Chairman Dicken opened the floor for a motion. Randy Lynn made a motion to approve the project as submitted as a 'major' agenda item. Lynette Praytor seconded the motion and a vote was taken thereon as follows:

David Dunbar	Absent
Randy Lynn	Aye
Ron Blaylock	Aye
Lynette Praytor	Aye
Randy Knouse	Absent
Glenn Ray	Absent
Connie Suber	Aye

Chairman Dicken then declared the motion to approve the project carried.

The second item on the agenda was **MISSISSIPPI SCHOOL BOARD ASSOCIATION.** The project was presented by **Mr. Gary Bailey** with **Bailey Architecture**. The project is located at **380 Zurich Drive.** The applicant is requesting approval to make building and site improvements.

Chairman Dicken opened the floor for a motion. Ron Blaylock made a motion to approve the project as submitted as a 'minor' agenda item. Connie Suber seconded the motion and a vote was taken thereon as follows:

David Dunbar	Absent
Randy Lynn	Aye
Ron Blaylock	Aye
Lynette Praytor	Aye
Randy Knouse	Absent
Glenn Ray	Absent
Connie Suber	Aye

Chairman Dicken then declared the motion to approve the project carried.

The third item on the agenda was **RICE ROAD RETAIL.** The project was presented by **Mr. Pradip Biswas**. The project is located at **Rice Road and Huntington Place.** The applicant is requesting approval to construct a new commercial development.

Chairman Dicken opened the floor for a motion. Ron Blaylock made a motion to approve the project as submitted as a 'major' agenda item. Lynette Praytor seconded the motion and a vote was taken thereon as follows:

David Dunbar	Absent
Randy Lynn	Aye
Ron Blaylock	Aye
Lynette Praytor	Aye
Randy Knouse	Absent
Glenn Ray	Absent
Connie Suber	Aye

Chairman Dicken then declared the motion to approve the project carried.

The fourth item on the agenda was **RANGER LABEL.** The project was presented by **Mr. Alan Hare** with **Ranger Label**. The project is located at **286 Commerce Park Drive.** The applicant is requesting approval to construct a building addition.

Chairman Dicken opened the floor for a motion. Lynette Praytor made a motion to approve the project as submitted as a 'minor' agenda item. Randy Lynn seconded the motion and a vote was taken thereon as follows:

David Dunbar	Absent
Randy Lynn	Aye
Ron Blaylock	Aye
Lynette Praytor	Aye
Randy Knouse	Absent
Glenn Ray	Absent
Connie Suber	Aye

Chairman Dicken then declared the motion to approve the project carried.

The fifth item on the agenda was **MAC'S FRESH MARKET PHARMACY.** The project was presented by **Mrs. Erin Martinez**. The project is located at **398 Highway 51.** The applicant is requesting approval to add a walk-up pharmacy window to the existing building.

Chairman Dicken opened the floor for a motion. Connie Suber made a motion to approve the project as submitted as a 'minor' agenda item. Ron Blaylock seconded the motion and a vote was taken thereon as follows:

David Dunbar	Absent
Randy Lynn	Aye
Ron Blaylock	Aye
Lynette Praytor	Aye
Randy Knouse	Absent
Glenn Ray	Absent
Connie Suber	Aye

Chairman Dicken then declared the motion to approve the project carried.

The minutes from the May 8, 2018 meeting were then read and approved by the board. There being no further business to come before the board, the meeting was adjourned.

_____
Bill Dicken, Chairman

ATTEST:

_____
Connie Suber, Secretary

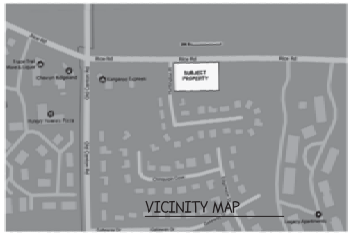

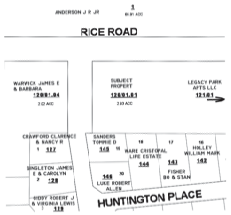

ADJACENT PROPERTIES

CITY OF RIDGELAND PARKING

Restaurant - 1,535 s.f.
patron use - 1,100/75 15
Employees. 4

Retail - 3,481/200 18

Future retail - 2,750/220. 14

Required parking 31

Parking provided. 65

AREA CALCULATION

Area of site - 57,292 s.f. (1.31 ac)

Building - 7,766 s.f. (13.6%)
(future retail included)

Parking & drives - 23,756 s.f. (41.4%)

Table 1: Mitigation Table for use with Sites less than 10 acres

Line	Item	Quantity	Unit
A	Total Existing Canopy Coverage of site	34,455	(Square Feet)
B	Baseline for Mitigation (Line A times 22 divided by 43,560SF)	15.81	(Mitigation Trees)
C	Existing Canopy Coverage to be Preserved	13,095	(Square Feet)
D	Preservation Tree Credit (Line C divided by 1000 SF)	13	(Mitigation Trees)
E	Total Mitigation Requirement (Line B minus Line D)	3	(Mitigation Trees)
F	Mitigation Option A - On-site Mitigation (Number of Mitigation Units Applicant prefers to use for On-site Mitigation)	3	(Mitigation Trees)
G	Mitigation Option B - Contribution to the In-Lieu Fund (Line E minus Line F times $300.00)		(Dollars)

Note: Preservation, On-Site Mitigation, Contribution to the In-Lieu Fund, or a combination thereof can be used at the discretion of the Applicant to satisfy the Mitigation requirements

SILT FENCE MAINTENANCE PLAN

1. Care shall be taken to minimize the movement of sediment into all storm drain appurtenances and public streets until the impervious material (road/parking area surface) is applied.
2. A drop inlet sediment trap with perimeter silt fencing or properly installed inflexible barriers is the recommended method of inlet protection. Sediment will be removed from the excavated drop inlet sediment trap and returned to the original depth when sediment accumulation has reached half the depth of the trap.
3. All erosion and sediment control measures will be checked for stability and operational integrity following every runoff-producing rainfall but in no case, less than every week. Any necessary repairs will be made immediately to maintain the measure's performance as designed.
4. Sediment will be removed from the upstream face of the silt fence when it reaches a maximum six-inch (6") depth at the fence. The fence will be replaced as necessary to maintain a barrier.

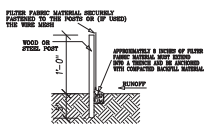

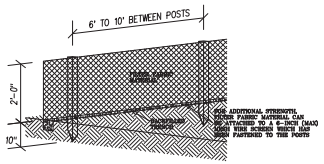

ATTACHING TWO SILT FENCES

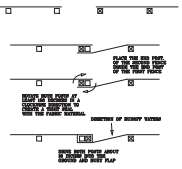

1.) THE EXIT SHALL BE MAINTAINED IN A CONDITION WHICH WILL PREVENT TRACKING OR FLOW OF MUD ONTO PUBLIC RIGHT-OF-WAY. THIS MAY REQUIRE PERIODIC TOP DRESSING WITH 1.5-3.5 INCH STONE, AS CONDITIONS DEMAND, AND REPAIR AND/OR CLEAN OUT OF ANY STRUCTURE USED TO TRAP SEDIMENT. ALL MATERIALS SPILLED, DROPPED, WASHED, OR TRACKED FROM VEHICLES OR SITE ONTO ROADWAYS OR INTO STORM DRAINS MUST BE REMOVED IMMEDIATELY.

2.) WHEELS MUST BE CLEANED TO REMOVE MUD PRIOR TO ENTRANCE ONTO PUBLIC RIGHT-OF-WAY. WHEN WASHING IS REQUIRED, IT SHALL BE DONE ON AN AREA WITH CRUSHED STONE WHICH DRAINS INTO AN APPROVED SEDIMENT TRAP OR SEDIMENT BASIN.
50' MIN.

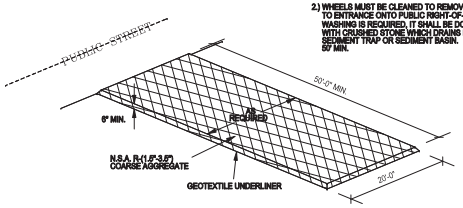

LEGEND

F.I.P. = FOUND IRON PIN
S.I.P. = SET IRON PIN - NO. 4 BAR @ 1' - 0" MINIMUM
PROPERTY LINE =
P.K. = PARKER KALON NAIL (FASTENER) FOUND (FND. P.K.) OR SET (SET P.K.)
EASEMENT =
SECTION LINE =
CONCRETE MONUMENT = C.M.
EXISTING FENCE =
POWER POLE = P.P.
POWER LINE =
LIGHT POLE = L.P.
WATER METER = W.M.
WATER LINE =
WATER VALVE = W.V.
NATURAL GAS VALVE = G.V.
NATURAL GAS LINE =
SANITARY SEWER MANHOLE = S.S.M.H.
SANITARY SEWER LINE =
TELEPHONE PEDESTAL = TEL. PED.
TELEPHONE LINE =
CABLE PEDESTAL = T.V. CABLE
T.V./CABLE LINE =

EXHIBIT A
LEGAL DESCRIPTION

A certain parcel of land being situated in the Southwest ¼ of Section 28, Township 7 North, Range 2 East, Madison County, Mississippi, said parcel being more particularly described as follows, to-wit:

Commencing at the Northeast corner of Lot 11, Gateway North, Part II, a subdivision as recorded in Flat Cabinet 'A', Slide 150 in the office of the Chancery Clerk of Madison County, Mississippi, and run thence N 88°10'51" E for a distance of 75.00 feet; run thence N 09°37'09" W for a distance of 181.31 feet; run thence N 86°37'51" E for a distance of 58.45 feet; run thence N 02°03'20" E for a distance of 299.03 feet; run thence N 87°54'40" W along the North boundary of Huntington Place Subdivision-Revised for a distance of 48.29 feet; run thence N 89°59'09" W along said North boundary for a distance of 280.57 feet to the POINT OF BEGINNING of the parcel herein described; thence continue N 89°59'09" W along said North boundary for a distance of 291.00 feet to the East right of way line of Huntington Place; run thence N 00°03'19" E along said East right of way line for a distance of 197.70 feet to the South right of way line of Rice Road; run thence S 89°39'53" E along said South right of way line for a distance of 291.00 feet; thence leaving said South right of way line, run S 00°03'19" W for a distance of 196.07 feet to the POINT OF BEGINNING, containing 1.32 acres, more or less.

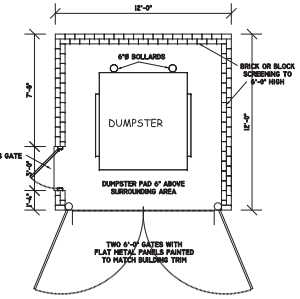

DUMPSTER PLAN
SCALE 1/4" = 1'-0"

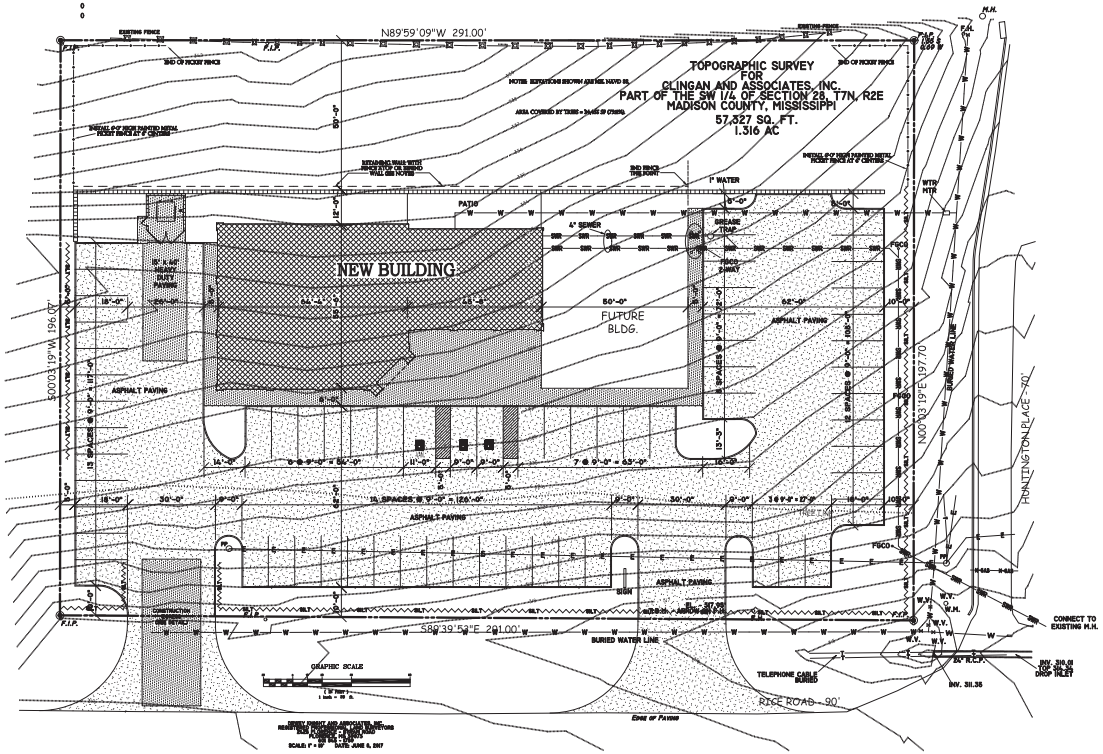

SITE PLAN

SCALE 1" = 20'-0"

SITE PLAN	RICE ROAD PLACE
clingan and associates architect 5339 I-55 NORTH, STE. 110B JACKSON, MISS. 39206-4141 PHONE AND FAX 601-713-0993 E-MAIL: clinganassociates@live.com ALL MATERIAL HEREIN © 2006 CLINGAN AND ASSOCIATES ARCHITECT	Rice Road at Huntington Place Ridgeland, Mississippi Date 06/28/17 Rev. 05/29/18 BKC Drawn ABC Rev. 06/27/18 BKC Check Rev. 05/08/18 BKC Page of

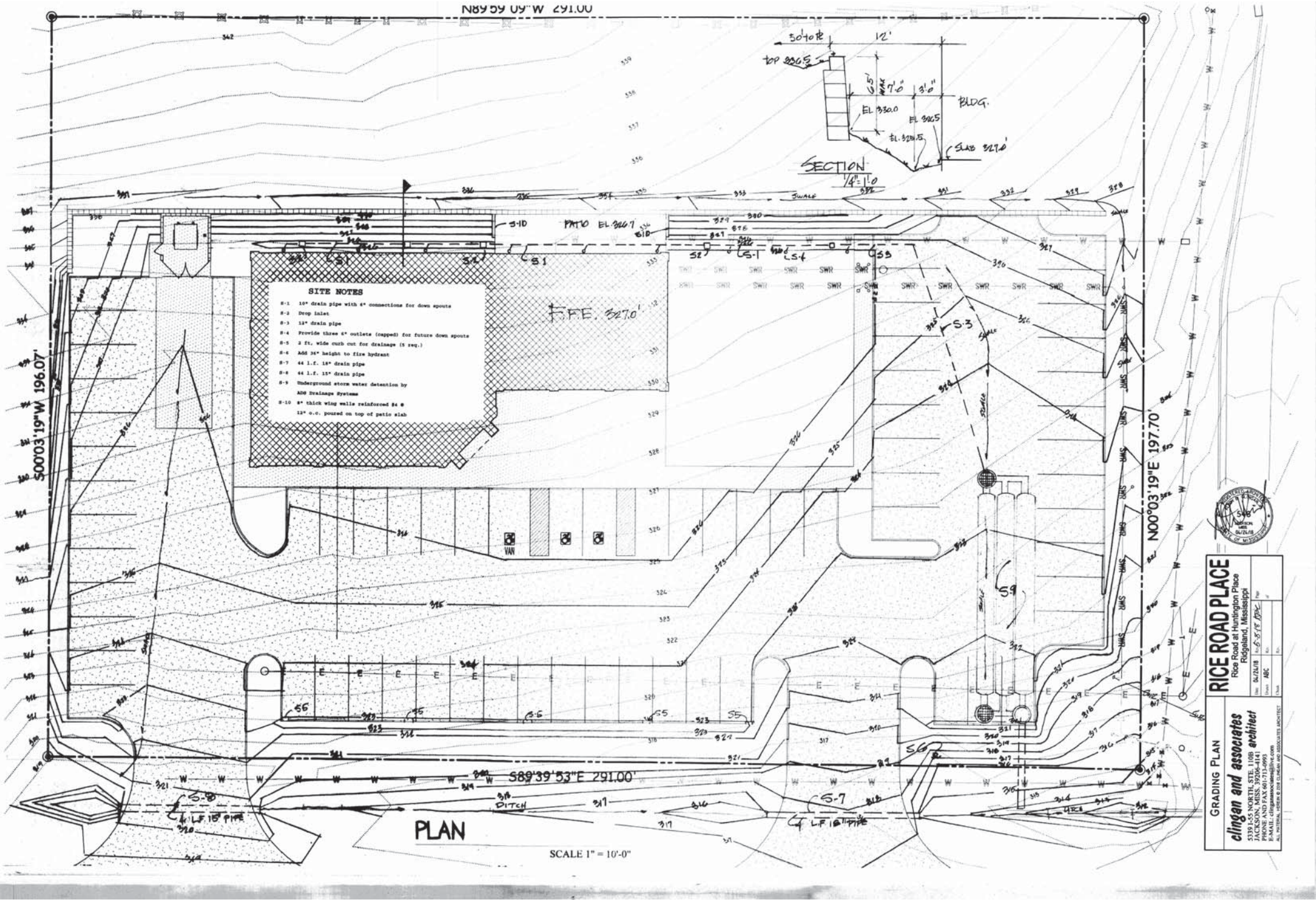
N89°59'09"W 291.00
S00°03'19"W 196.07'
N00°03'19"E 197.70'
S89°39'53"E 291.00'
SITE NOTES
S-1 10" drain pipe with 4" connections for down spouts
S-2 Drop inlet
S-3 12" drain pipe
S-4 Provide three 6" outlets (capped) for future down spouts
S-5 2 ft. wide curb cut for drainage (5 req.)
S-6 Add 36" height to fire hydrant
S-7 44 l.f. 18" drain pipe
S-8 44 l.f. 15" drain pipe
S-9 Underground storm water detention by ADS Drainage Systems
S-10 8" thick wing walls reinforced #4 @ 12" o.c. poured on top of patio slab
F.F.E. 327.0'
PATIO EL 326.7
SECTION
1/4" = 1'-0"
BLDG.
SLAB 327.0'
EL 330.0
EL 326.5
DITCH
L.F. 18" PIPE
VAN
PLAN
SCALE 1" = 10'-0"
RICE ROAD PLACE
Rice Road at Huntington Place
Ridgeland, Mississippi
GRADING PLAN
clingan and associates architect
5339 I-55 NORTH, STE. 110B
JACKSON, MISS. 39206-4141
PHONE: (601) 366-3000 FAX: (601) 366-3001
E-MAIL: clingansarch@bellsouth.net
ALL MATERIAL HEREIN © 2018 CLINGAN AND ASSOCIATES ARCHITECT
Date 06/26/18
Drawn ABC
Check
Rev.
Rev.
Rev.
Rev.
MISSISSIPPI
06/26/18

GENERAL NOTES:

Bed Prep: All beds to receive 3" min organic humus. Till into existing soil 10"-12" deep. Rake smooth. Remove any debris and top dress with pine straw. Mulch 2"-3" minimum.

Solid Sod: Hybrid Bermuda Sod, pin with metal sod staples on slopes. Contactor is responsible for 1" deep initial watering.

Seeded Areas: Disk +/- 4", drag smooth, Apply Bermuda seed at rate of 2 lbs/1000 s.f., 13-13-13 Fertilizer (1) 50 lb. bag/6000 s.f.' 1 bale Wheat Straw/500 s.f.

Staking: Metal stakes 6' long to be used to stake trees, For 1½" trees, use 2 stakes per tree. Crepe myrtle 1 per tree @ angle.

Warranty: All plants to be warranted for 6 months after final acceptance. Seeding areas will be accepted after all areas have been covered uniformly. No open exposed area bigger than 6" across will be accepted.

Watering: This is essential to be done on a regular schedule, failure to do so will relieve landscape contractor of warranty replacements of plants, sod and seeding.

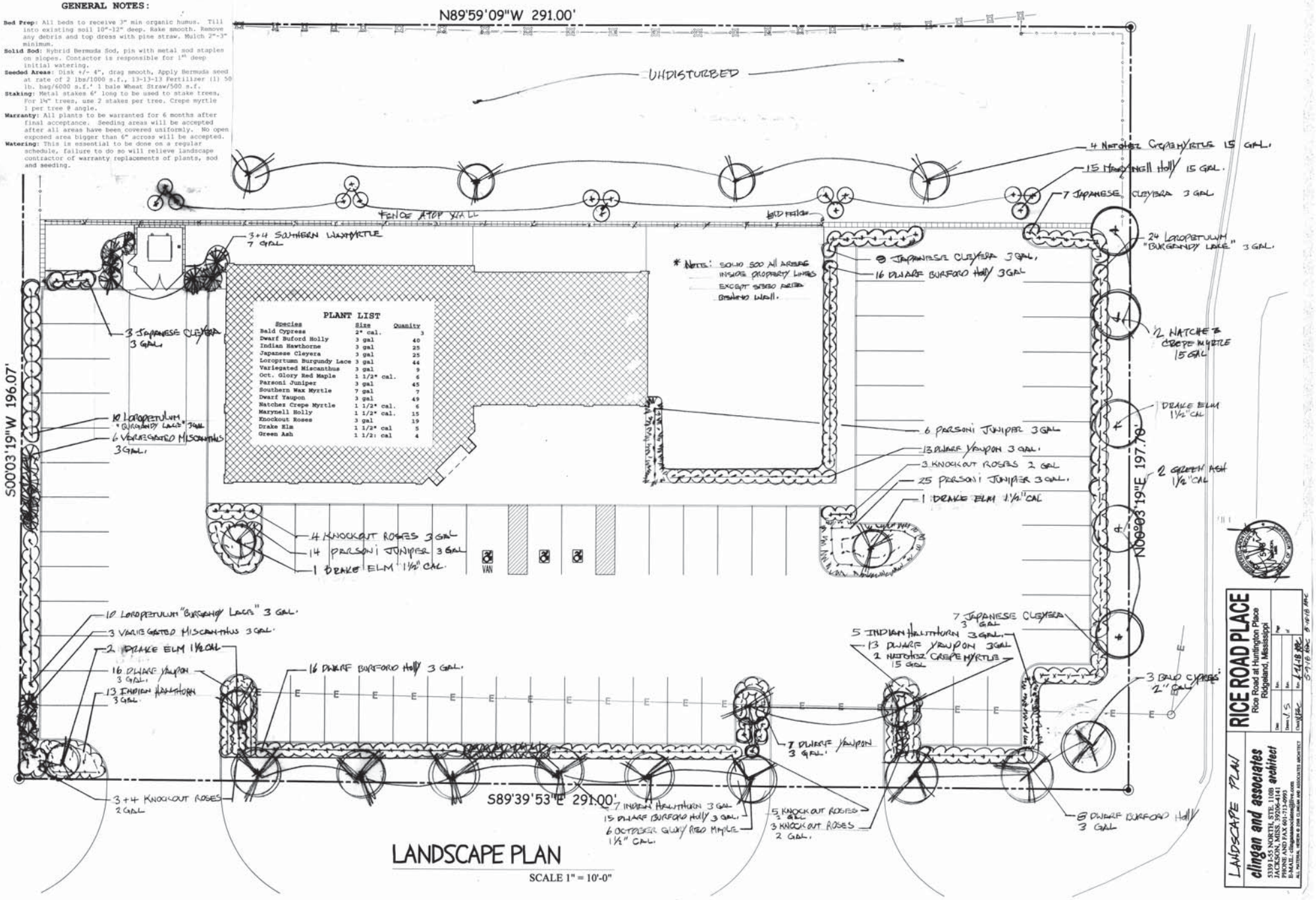

LANDSCAPE PLAN

SCALE 1" = 10'-0"

PLANT LIST

Species	Size	Quanity
Bald Cypress	2" cal.	3
Dwarf Buford Holly	3 gal	40
Indian Hawthorne	3 gal	25
Japanese Cleyera	3 gal	25
Loropetum Burgundy Lace	3 gal	44
Variegated Miscanthus	3 gal	9
Oct. Glory Red Maple	1 1/2" cal.	6
Parsoni Juniper	3 gal	45
Southern Wax Myrtle	7 gal	7
Dwarf Yaupon	3 gal	49
Natchez Crepe Myrtle	1 1/2" cal.	6
Marynell Holly	1 1/2" cal.	15
Knockout Roses	3 gal	19
Drake Elm	1 1/2" cal	5
Green Ash	1 1/2: cal	4

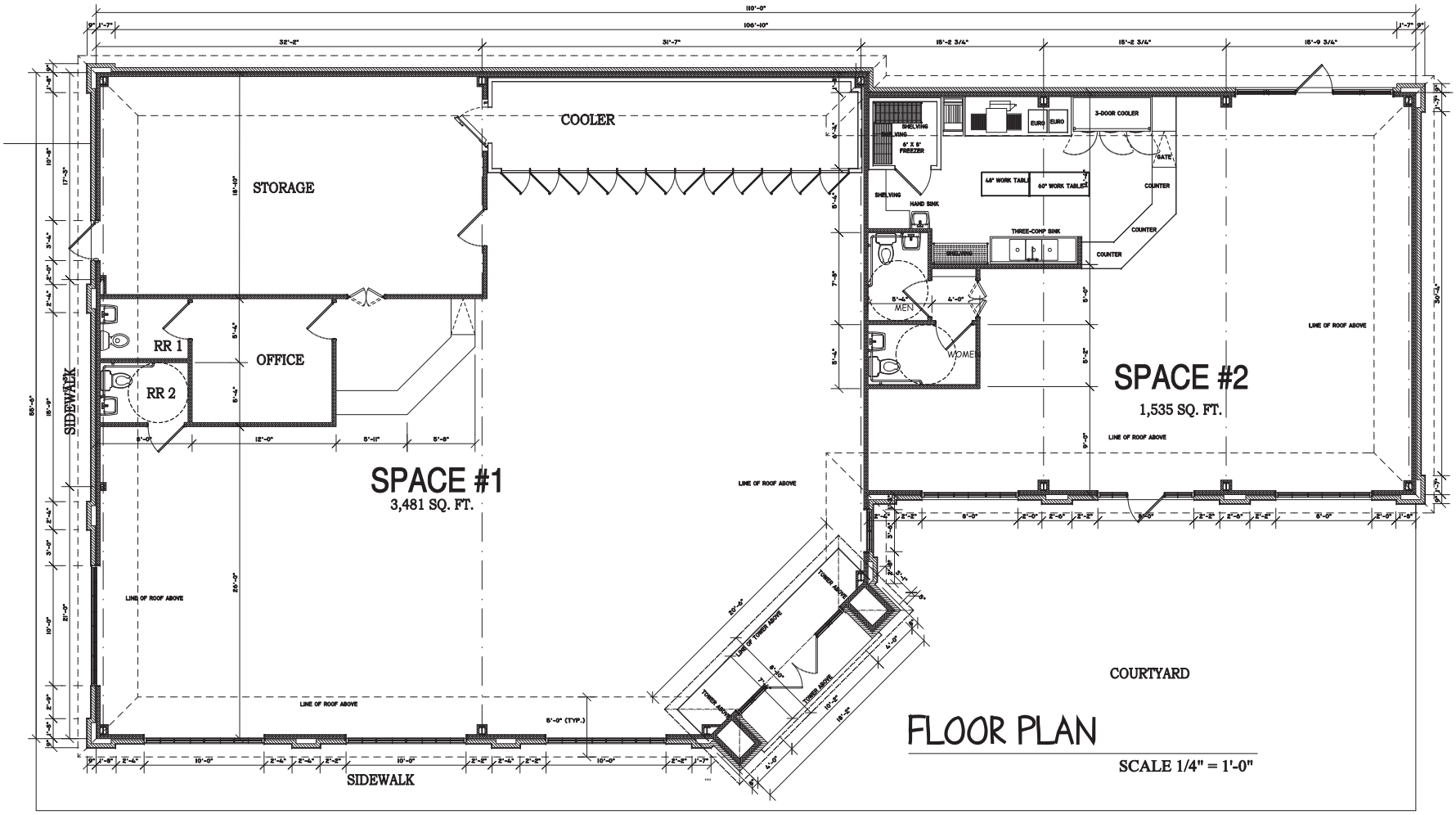

FLOOR PLAN

SCALE 1/4" = 1'-0"

FLOOR PLAN

clingan and associates architect
5339 I-55 NORTH, STE. 110B
JACKSON, MISS. 39206-4141
PHONE AND FAX 601-713-0993
E-MAIL: clinganassociates@live.com

ALL MATERIAL HEREIN © 2016 CLINGAN AND ASSOCIATES ARCHITECT

04/20/19

RICE ROAD PLACE

Rice Road at Huntington Place
Ridgeland, Mississippi

Date 12/29/17	Rev.	01/12/18 RKC 02/26/18 RKC	Page
Drawn RKC	Rev.	03/13/18 RKC 04/11/18 RKC	of
Check	Rev.	04/25/18 RKC 05/03/18 RKC	

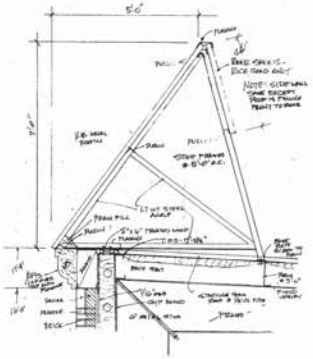

FRONT ROOF DETAIL

SCALE 1/2" = 1'-0"

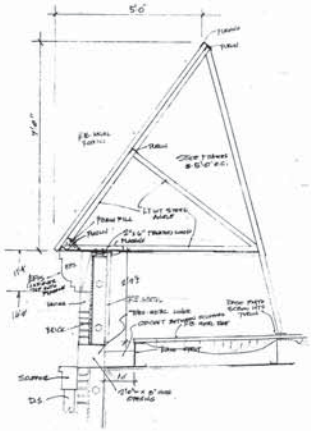

REAR ROOF DETAIL

SCALE 1/2" = 1'-0"

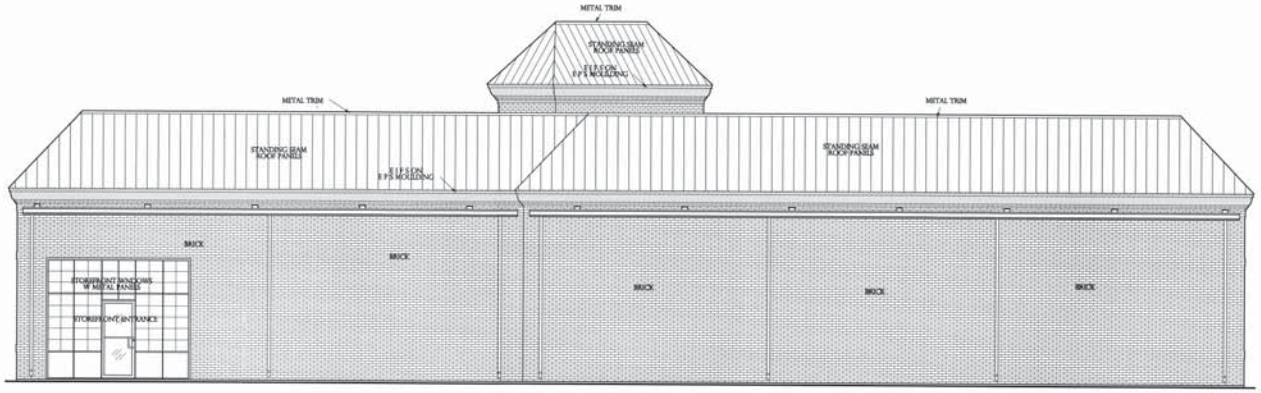

REAR (SOUTH) ELEVATION

SCALE 3/16" = 1'-0"

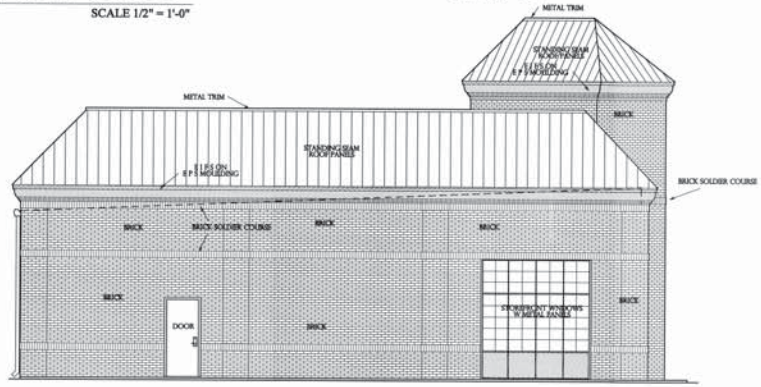

LEFT (EAST) ELEVATION

SCALE 3/16" = 1'-0"

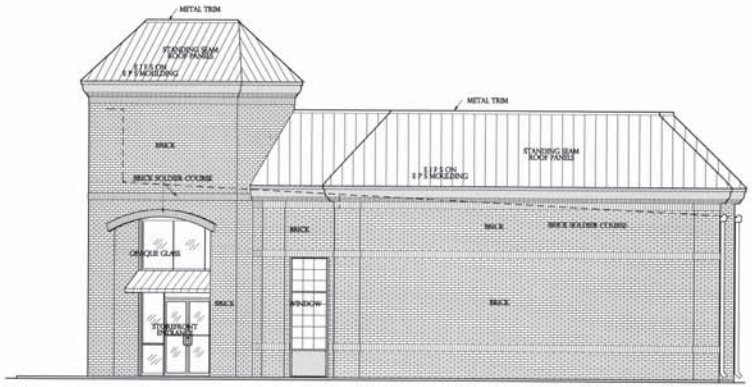

RIGHT (WEST) ELEVATION

SCALE 3/16" = 1'-0"

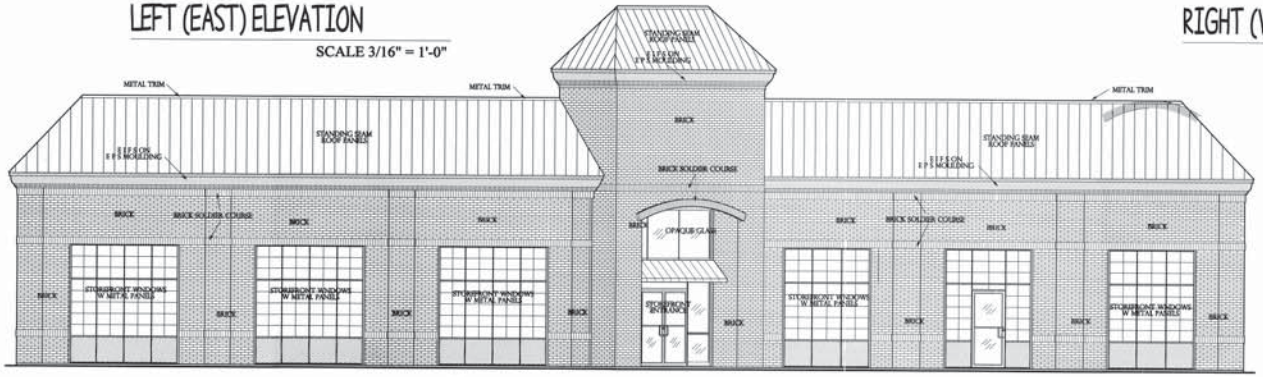

FRONT (NORTH) ELEVATION

SCALE 3/16" = 1'-0"

FRONT ELEVATION

clingan and associates architect
5339 I-55 NORTH, STE. 110B
JACKSON, MISS. 39206-4141
PHONE AND FAX 601-713-0993
E-MAIL: clinganassociates@live.com

ALL MATERIAL HEREIN © 2018 CLINGAN AND ASSOCIATES ARCHITECT

RICE ROAD PLACE

Rice Road at Huntington Place
Ridgeland, Mississippi

Date 10/05/17	Rev. 12/27/17 RKC	Page	
	Rev. 02/06/18 RKC		
Drawn RKC	Rev. 04/10/18 RKC	of	
	Rev. 04/27/18 RKC		
Check	Rev. 05/01/18 RKC		

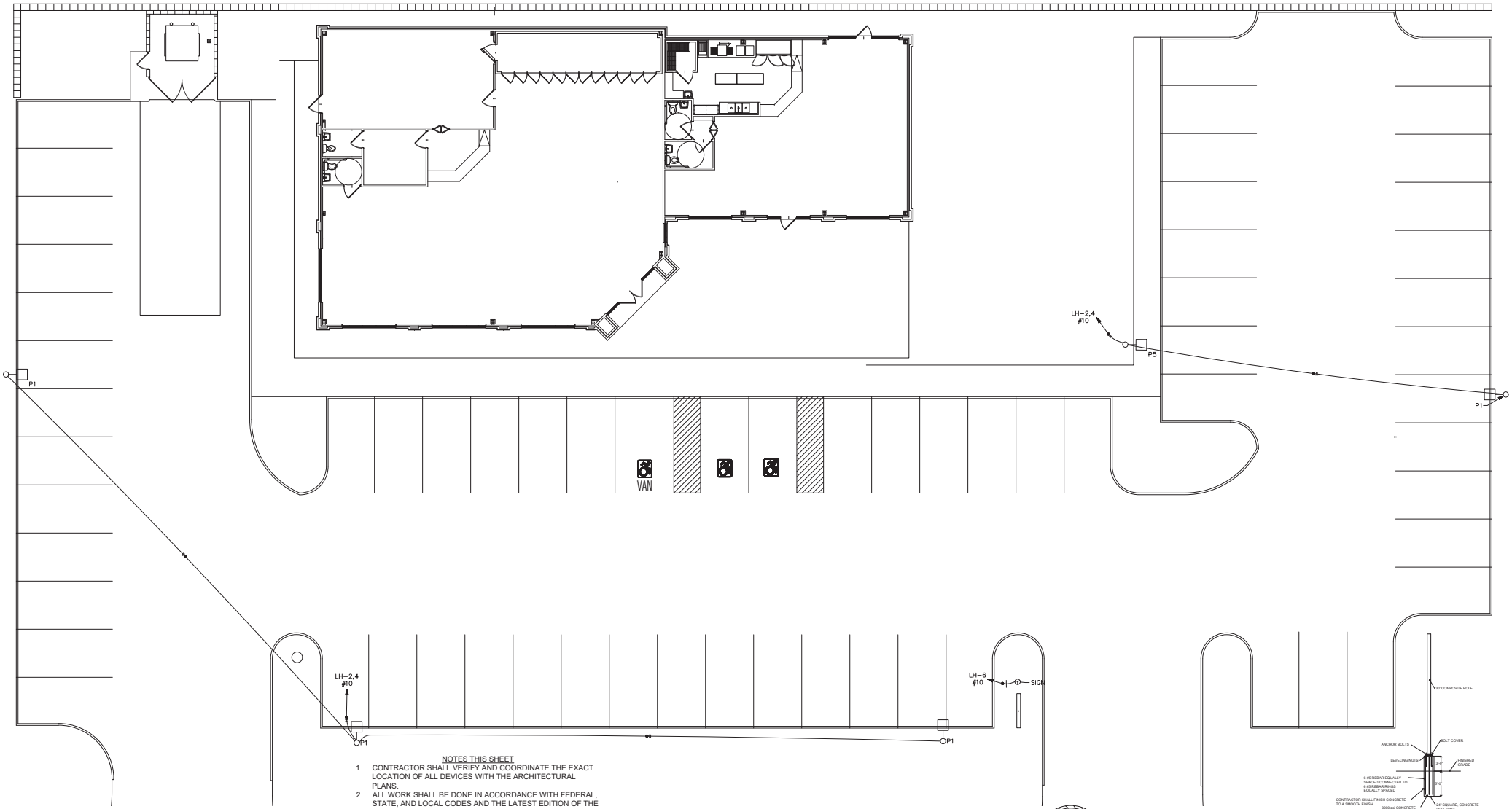

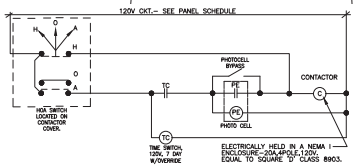

LIGHTING CONTACTOR WIRING DIAGRAM

NOT TO SCALE

NOTES THIS SHEET

1. CONTRACTOR SHALL VERIFY AND COORDINATE THE EXACT LOCATION OF ALL DEVICES WITH THE ARCHITECTURAL PLANS.
2. ALL WORK SHALL BE DONE IN ACCORDANCE WITH FEDERAL, STATE, AND LOCAL CODES AND THE LATEST EDITION OF THE NEC.
3. FURNISH AND INSTALL 2 - 4" PVC CONDUITS FROM THE TRANSFORMER PAD TO THE UTILITY CO. POLE. ONE CONDUIT TO RISE UP POLE AS REQUIRED, ONE CONDUIT TO BE CAPPED AT BASE OF POLE.
4. ROUTE ONE 3" CONDUIT FROM THE TELEVISION BACKBOARD TO THE PROPERTY LINE AS DIRECTED BY LOCAL TELEVISION VENDOR FOR TELEVISON SERVICE ENTRANCE. INSTALL PULL STRING/WIRE IN CONDUIT.
5. ROUTE ONE 3" CONDUIT FROM THE TELEPHONE BACKBOARD TO THE PROPERTY LINE AS DIRECTED BY LOCAL TELEPHONE VENDOR FOR TELEPHONE SERVICE ENTRANCE. INSTALL PULL STRING/WIRE IN CONDUIT.

Site Electrical

SCALE: 1/8" = 1'

DETAIL 2/E1 TYPICAL LIGHT POLE FOUNDATION

" NO SCALE

systems engineering
automation power electrical
142 Woodberry Place, Madison, MS 39110
601-214-5513 LannyPurvisPE@SystemsEngr.com

PLOTTED ON 5/18/2018 2:49:29 PM

SITE ELECTRICAL PLAN

clingan and associates architect
5339 I-55 NORTH, STE. 110B
JACKSON, MISS. 39206-4141
PHONE AND FAX 601-713-0993
E-MAIL: clinganassociates@live.com

ALL MATERIAL HEREIN © 2017 CLINGAN AND ASSOCIATES ARCHITECT

RICE ROAD PLACE

Rice Road at Hunington Place
Ridgeland, Mississippi

Date:	9.25.17	Rev:	1.17.18
Drawn:	LEP	Rev:	5.4.18
Chkd:	9.26.17	Rev:	5.18.18

E4

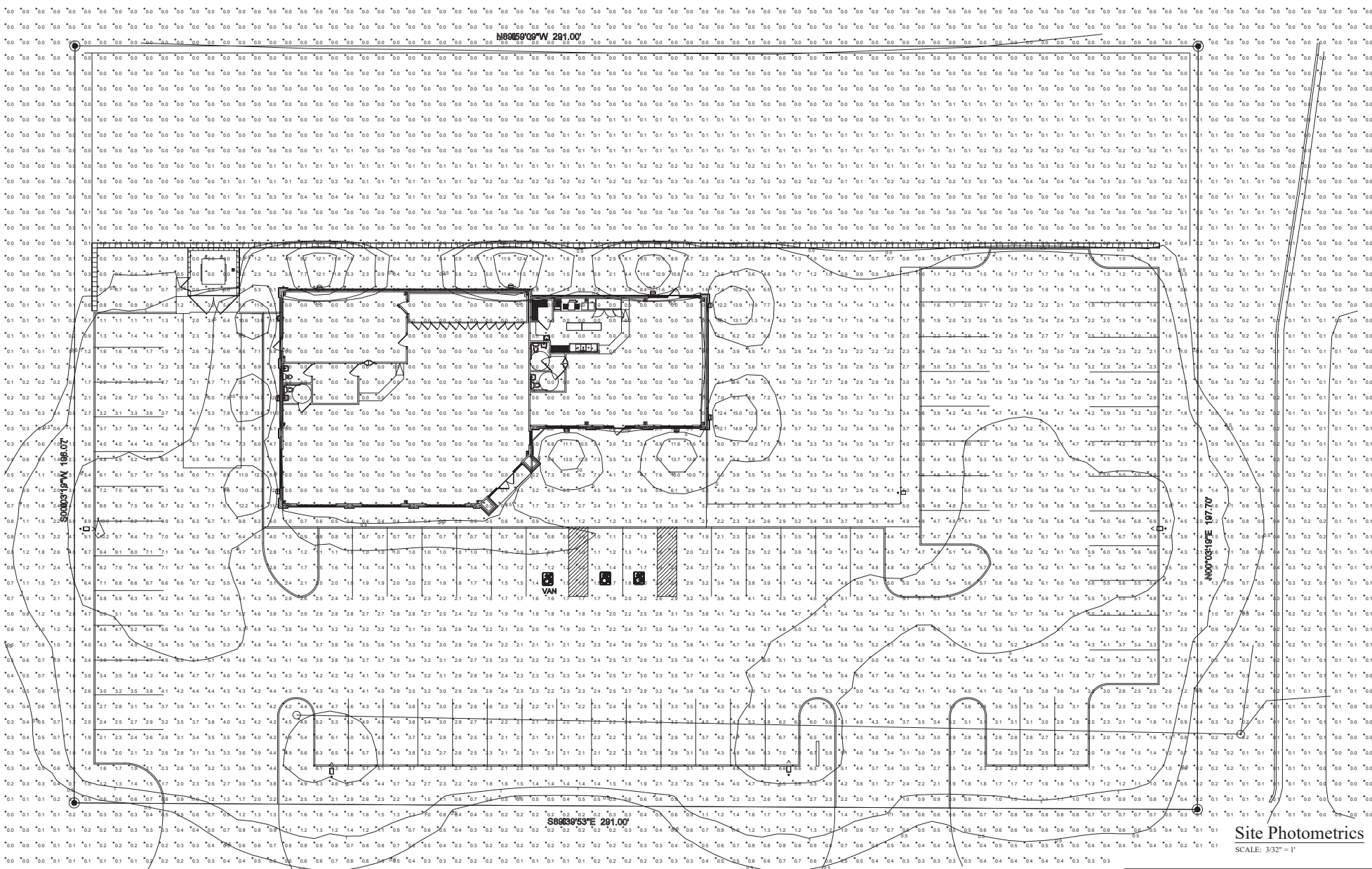

Site Photometrics

SCALE: 3/32" = 1'

systems engineering
automation power electrical
142 Woodberry Place, Madison, MS 39110
601-214-5513 LannyPurvisPE@SystemsEngr.com

PLOTTED ON 5/18/2018 3:50:21 PM

SITE PHOTOMETRICS

clingan and associates architect
5339 I-55 NORTH, STE. 110B
JACKSON, MISS. 39206-4141
PHONE AND FAX 601-713-0993
E-MAIL: clinganassociates@live.com

ALL MATERIAL HEREIN © 2017 CLINGAN AND ASSOCIATES ARCHITECT

RICE ROAD PLACE

Rice Road at Hunington Place
Ridgeland, Mississippi

Date: 1.19.18	Rev. 5.14.18		E5
Drawn: LEP	Rev. 5.18.18		
Check: 1.19.18	Rev.		

Not for construction
Illustration does not depict topography

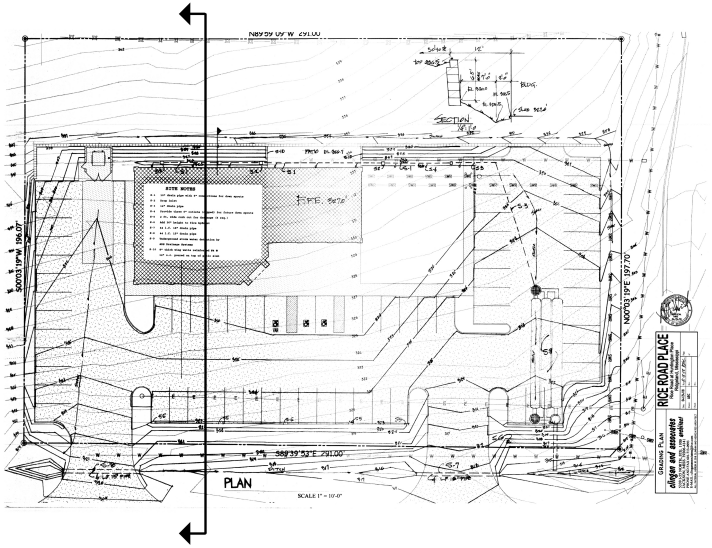
PLAN
SCALE 1" = 10'-0"
RICE ROAD PLACE
GRADING PLAN
allegro and associates
civil engineers
S00°03'19"W 196.07'
N00°03'19"E 197.70'
S89°39'53"E 291.00'
FFE. 327'
SECTION

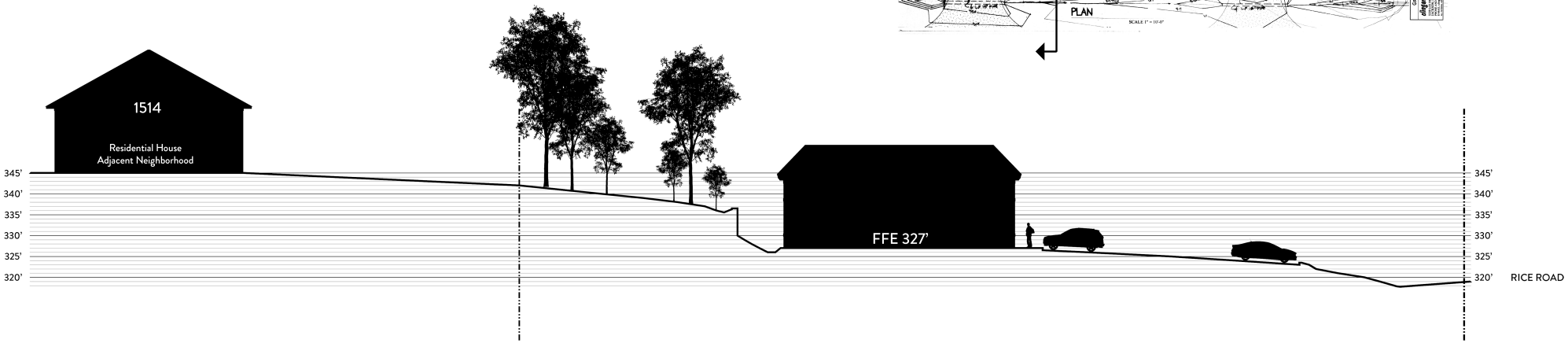
1514
Residential House
Adjacent Neighborhood
FFE 327'
345'
340'
335'
330'
325'
320'
RICE ROAD

Alan Hart

From: John Ditto <John@statestreetgroup.com>
Sent: Wednesday, May 16, 2018 3:22 PM
To: Alan Hart
Subject: Re: Zoning Board Meeting

Alan, I'll withdraw the petition.

John Ditto
President

P.O. Box 13925
Jackson, MS 39236-3925
601.981.4445 ext 24 | telephone
john@statestreetgroup.com
www.statestreetgroup.com

The information contained in this communication is confidential, may be privileged and is intended only for the use of the individual to whom it is addressed. If you are not the intended recipient, you are hereby notified that any dissemination, distribution, or copying of this communication is strictly prohibited. Immediately notify the sender by reply e-mail if you have received this communication in error. Please delete this communication and any copies thereof. This email (including attachments) is covered by the Electronic Communications Privacy Act, 18 USC Sections 2510-2521.

From: Alan Hart <alan.hart@ridgelandms.org>
Date: Wednesday, May 16, 2018 at 10:39 AM
To: JOHN DITTO <john@statestreetgroup.com>
Cc: 'Jerry Mills' <jmills@pdmd.biz>
Subject: RE: Zoning Board Meeting

John,

I certainly appreciate your support for the City and the contributions you and your company have made to better our city over the years. This matter was previously tabled by the Zoning Board until May 17, 2018 at 6pm. Since you have not officially withdrawn your Petition, you, of course, have the right to appear before the Zoning Board to make any appropriate record you desire. Without an official withdrawal, the Zoning Board and subsequently the Mayor and Board of Aldermen will be required to make a final determination of your Petition. If you would like to discuss this further, it is probably best for you to contact Jerry Mills, city attorney, who is more capable of explaining the legalities of zoning as it relates to your Petition. Jerry may be reached at 601-957-2600.

Alan Hart, PLA, ASLA
Director of Community Development
P.O. Box 217 · Ridgeland, MS 39158
304 Highway 51 · Ridgeland, MS 39157
PH: (601) 856-3877 ext. 2033 · FAX: (601) 853-2030
alan.hart@ridgelandms.org
www.ridgelandms.org

From: John Ditto [mailto:John@statestreetgroup.com]
Sent: Wednesday, May 16, 2018 10:00 AM

To: Alan Hart <Alan.Hart@ridgelandms.org>
Subject: Re: Zoning Board Meeting

Thanks Alan. But just to be clear, I didn't withdraw my petition but rather the City changed the zoning ordinance and effectively removed my ability to petition in a timely manner. I am not an attorney and don't know that there is a legal distinction but I fully intended to pursue a conditional use until the Board of Aldermen decided to change the zoning ordinance. I pursed this development in good faith based on the zoning in place, and the actions of the Mayor and Board cost me a great deal of money. I have always had a good relationship with the City but I would be remiss if I didn't express my disappointment in how this issue was handled. Unlike StorageMax I first consulted the City and then only pursued sites that were property zoned for my intended use. I made business decisions based on current zoning at that time. No one from the administration ever contacted me prior to voting to put a moratorium on self storage and then to change the zoning ordinance. I would have appreciated greater transparency. If the City didn't want self storage on C-3 then it could have discouraged me from pursuing my project and changed the zoning much earlier, before I invested a good deal of time and money. Instead the City waited almost a year after I first presented my project in the spring of 2017 to change the zoning ordinance. Despite this setback my company will continue to own multiple properties in the City of Ridgeland and I will continue to support that City. Ridgeland has been a good market to invest for the last 30 years. Our company office has been located in Ridgeland for several years. I have worked with City officials and fellow property owners to improve the 220 Business Park on the south end of the Highland Colony Parkway. We pay a lot in property taxes to the City and want it to prosper and for property values to increase. I am on your side, except apparently when I am not.

John Ditto
President

P.O. Box 13925
Jackson, MS 39236-3925
601.981.4445 ext 24 | telephone
john@statestreetgroup.com
www.statestreetgroup.com

The information contained in this communication is confidential, may be privileged and is intended only for the use of the individual to whom it is addressed. If you are not the intended recipient, you are hereby notified that any dissemination, distribution, or copying of this communication is strictly prohibited. Immediately notify the sender by reply e-mail if you have received this communication in error. Please delete this communication and any copies thereof. This email (including attachments) is covered by the Electronic Communications Privacy Act, 18 USC Sections 2510-2521.

From: Alan Hart <alan.hart@ridgelandms.org>
Date: Wednesday, May 16, 2018 at 8:53 AM
To: JOHN DITTO <john@statestreetgroup.com>
Subject: RE: Zoning Board Meeting

Thanks John. In the event the Board ever changes the Ordinance to permit this use, you would certainly have the option to Petition for a Conditional Use. I will provide this information to the Zoning Board with the understanding that you are withdrawing this particular Petition.

Alan Hart, PLA, ASLA
Director of Community Development
P.O. Box 217 · Ridgeland, MS 39158
304 Highway 51 · Ridgeland, MS 39157
PH: (601) 856-3877 ext. 2033 · FAX: (601) 853-2030
alan.hart@ridgelandms.org
www.ridgelandms.org

From: John Ditto [mailto:John@statestreetgroup.com]
Sent: Wednesday, May 16, 2018 8:38 AM
To: Alan Hart <Alan.Hart@ridgelandms.org>
Subject: Re: Zoning Board Meeting

Alan, I am sorry that it took me so long to respond. I have been waiting to hear back from my attorney. Since the Ridgeland Board of Aldermen recently voted to exclude climate controlled self-storage from C-3 zoning as a conditional use I see no reason to waste the Zoning Board members' time this Thursday. However, if the Board of Aldermen's decision is reversed I would like to reserve my right to present my Petition to the Zoning Board. Thanks so much.

John Ditto
President

P.O. Box 13925
Jackson, MS 39236-3925
601.981.4445 ext 24 | telephone
john@statestreetgroup.com
www.statestreetgroup.com

The information contained in this communication is confidential, may be privileged and is intended only for the use of the individual to whom it is addressed. If you are not the intended recipient, you are hereby notified that any dissemination, distribution, or copying of this communication is strictly prohibited. Immediately notify the sender by reply e-mail if you have received this communication in error. Please delete this communication and any copies thereof. This email (including attachments) is covered by the Electronic Communications Privacy Act, 18 USC Sections 2510-2521.

From: Alan Hart <alan.hart@ridgelandms.org>
Date: Tuesday, May 15, 2018 at 8:43 AM
To: JOHN DITTO <john@statestreetgroup.com>
Subject: FW: Zoning Board Meeting

John,

We have notified the Zoning Board Members to be present at the Zoning Board Meeting this Thursday to consider your Petition that was previously tabled to this date. Please be sure to be in attendance. The meeting starts at 6pm at City Hall in the Board Room, and your item is the only item on the agenda.

Thanks,

Alan Hart, PLA, ASLA
Director of Community Development
P.O. Box 217 · Ridgeland, MS 39158
304 Highway 51 · Ridgeland, MS 39157
PH: (601) 856-3877 ext. 2033 · FAX: (601) 853-2030
alan.hart@ridgelandms.org
www.ridgelandms.org

From: Jordan Lohman
Sent: Tuesday, May 15, 2018 8:37 AM
To: Bernie Giessner (bgeorgeg@att.net) <bgeorgeg@att.net>; Drew Malone (dmalone@dmalonelaw.com) <dmalone@dmalonelaw.com>; Jim Collette (Mobile1hero@gmail.com) <Mobile1hero@gmail.com>; Judy Rice (jmrjudy@aol.com) <jmrjudy@aol.com>; Larry Miller (Lmiller@ergms.com) <Lmiller@ergms.com>; Michelle Caballero (afsms123@gmail.com) <afsms123@gmail.com>; Tracy Bailey (tracyb@whiteconst.com) <tracyb@whiteconst.com>;

Walter Cox (wcox532@comcast.net) <wcox532@comcast.net>
Cc: Gene McGee <gene.mcgee@ridgelandms.org>; Aldermen <Aldermen@Ridgelandms.org>; Alan Hart <Alan.Hart@ridgelandms.org>; Karen Knight <Karen.Knight@Ridgelandms.org>; Bridgette Smith <Bridgette.Smith@Ridgelandms.org>; jmills@pdmd.biz; jscanlon@pdmd.biz; Missy Huddleston <mhuddleston@pdmd.biz>
Subject: Zoning Board Meeting

Good morning,

We have a meeting scheduled for this Thursday for a Petition and Application for Conditional Use Permit. Please see the attached agenda and petition.

Thank you,

Jordan Lohman, PLA, ASLA
City Planner
Community Development

P.O. Box 217 · Ridgeland, MS 39158
304 Highway 51 · Ridgeland, MS 39157
601.856.3877 ext. 2058 · www.ridgelandms.org
jordan.lohman@ridgelandms.org

Alan Hart

From: JP Kruger <jpkruger1@yahoo.com>
Sent: Wednesday, May 16, 2018 1:27 PM
To: Alan Hart
Subject: withdraw 282 hwy 51

Withdraw request for architectural review of use of 3 front parking lot spots to wash cars @ 282 hwy 51 ridgeland ms 39157

J.P.KRUGER
President & CEO
*Kruger INC.
*Ridgeland Service Center (GOODYEAR)
*Auto-Lux LLC. European Auto Repair
*Crown Auto LLC.

282 highway 51
Ridgeland MS 39047
www.ridgelandservicecenter.com
www.autoluxms.com
601 856 7666
601 956 6206

the city of RIDGELAND

police department

May 24, 2018

TO: Mayor & Board of Aldermen

FROM: John R. Neal, Chief of Police

SUBJECT: Surplus Property

I am requesting the following city vehicles be declared surplus property to be sold:

Description	Unit#	Mileage	VIN #	ASSET #
2010 Ford Crown Vic	284	120,495	2FABP7BVXAX144489	100-1-594
2009 Ford Crown Vic	277	107,926	2FAHP71V09X117678	100-1-580
2009 Ford Crown Vic	278	117,502	2FAHP71V99X140635	100-1-583

Your consideration and approval of this request will be greatly appreciated.

CC: Craig Cotten

115 west school street • ridgeland, ms 39157
ph: 601.856.2121 • www.ridgelandms.org

Gene F. McGee, cmo - mayor • John R. Neal - chief of police
board of aldermen: D.I. Smith, cmo - at-large • Ken Heard, cmo - ward 1 • Chuck Gautier, cmo - ward 2
Kevin Holder, cmo, mayor pro tempore - ward 3 • Brian P. Ramsey, cmo - ward 4 • Bill Lee - ward 5 • Wesley Hamlin, cmo - ward 6

the city of RIDGELAND

police department

May 24, 2018

TO: Mayor & Board of Aldermen

FROM: John R. Neal, Chief of Police

SUBJECT: Special Event – Ella Armstrong Triathlon

I have attached a request for a Special Event Permit from Allen Joiner with Mississippi Race Management (MRM) in connection with the Ella Strong Triathlon. This event is a triathlon scheduled Saturday, June 30, 2018 from 7:00 am until completion and will begin at the Madison Healthplex Performance Center. It should be noted that the majority of this event will be held in the City of Madison with only a small portion of the triathlon to be held within the city limits of Ridgeland. The course route is attached for your review.

Mr. Joiner is expecting approximately 250 participants and the bicyclist will travel south on Highland Colony Parkway from Madison into the City of Ridgeland. Volunteers will be available to set-up and clean-up upon completion of event.

This event will generate overtime for the police department and there are eleven (11) posts that will need to be manned for approximately 2 hours each to ensure participants safety. At a rate of $27.00 per hour, the estimated overtime costs will be $594.00.

Checks in the amounts of $100.00 and $1,000.00 representing requisite filing fee and bond money are attached.

Your consideration and approval will be greatly appreciated.

CC: Lt. Tony Willridge

Attachments (1)

115 west school street · ridgeland, ms 39157
ph: 601.856.2121 · www.ridgelandms.org

Gene F. McGee, cmo - mayor · John R. Neal - chief of police
board of aldermen: D.I. Smith, cmo - at-large · Ken Heard, cmo - ward 1 · Chuck Gautier, cmo - ward 2
Kevin Holder, cmo, mayor pro tempore - ward 3 · Brian P. Ramsey, cmo - ward 4 · Bill Lee - ward 5 · Wesley Hamlin, cmo - ward 6

the city of RIDGELAND

CITY OF RIDGELAND
SPECIAL EVENT PERMIT APPLICATION

(Please allow minimum 30 days for approval)

EVENT NAME: Tri to be Ellen Strong Triathlon

EVENT LOCATION: Madison Baptist Healthplex

EVENT DATE: Beginning 6/30/18 to Ending 6/30/18 Multiple Days: ☐ YES ☒ NO

EVENT HOURS: Beginning 7:00 am to Ending 10:00 am

TYPE OF EVENT: Triathlon

EVENT POINT OF CONTACT: Allen Joiner CELL NUMBER: 601-213-2135
(This person must remain on scene during the entire event)

NAME OF ORGANIZATION: MS Race Mgmt.

ADDRESS: 100 Fountains Blvd. CITY/STATE/ZIP: Madison, MS 39110

ESTIMATED CROWD SIZE: 250 NUMBER OF EVENT PERSONNEL: 40

ARRANGEMENTS FOR RESTROOM FACILITIES: ☒ YES ☐ NO LOCATION: Healthplex

ARRANGEMENTS FOR SITE CLEAN-UP: ☒ YES ☐ NO DETAILS: Volunteers

RECYCLING PROGRAM FOR WASTE: ☐ YES ☒ NO DETAILS:

The City of Ridgeland will assist organizers in planning and locating recycle bins for recyclable waste through local companies. Event organizers are encouraged to maintain the City of Ridgeland's vision of a green environment by having your event recycle its waste.

Will the organizers of this event use the services of an UAS (unmanned aircraft system): ☐ YES ☒ NO
If Yes, who is the operator of the system: Cell Number:
If an UAS/Drone will be utilized, a copy of the following required documents must be attached to this application:

- Section 333 Exemption or Aircraft Certification
- Certificate of Authorization (COA)
- Aircraft Registration and Markings
- Pilot Certificate

FIRST AID/MEDICAL STATION(s): ☒ YES ☐ NO LOCATION(s): Healthplex

POLICE/SECURITY PERSONNEL REQUIRED: Yes ☒ Police Dept. Assigned ☐ Self-Hired ☐ Not Applicable

ASSISTANCE FROM OTHER CITY DEPARTMENTS: ☐ Fire Department ☐ Public Works/Streets ☐ Recreation/Parks

Applicant Printed Name: Allen Joiner Contact Number: 601-213-2135

Applicant Signature: Allen Joiner Date: 5/7/18

Application Instructions

1). You must present to the Chief of Police or his designee your plan for parking and traffic control. You must state in this plan whether or not police or private security personnel will be needed to direct and handle traffic and parking.

2). City of Ridgeland Special Events Ordinance section 10-33(2) requires adequate security be provided at special events. This requirement is one security officer for every 400 people in attendance. A private security company may be used but preference shall be given to the hiring of off duty personnel. The assistance from Ridgeland Police Department for road course races/walks to secure intersections shall not be considered as part of the security requirement. The personnel assigned for traffic control are in addition to any requirement for on site security personnel required in the ordinance.

3). If the event is to have outdoor music, a Permit to Play on Premises Music will be required from the applicant agreeing to comply with the noise ordinance of the City of Ridgeland, MS.

4). If there is a need for Police Dept., Fire Dept., Public Works Dept. and/or Rec/Parks Dept. personnel to work in controlling the special event, the applicant will agree to pay this cost from the filing of a bond fee.

5). The applicant may be required to post a bond fee in the minimum amount of one thousand dollars ($1,000.00) with the City Clerk. This is to ensure that the event area is immediately cleaned up after its conclusion, and any City employee who works overtime as a result of the special event, will be compensated from the bond proceeds.

6). Submit the above application and information to the Office of the Chief of Police with a non-refundable filing fee of one hundred dollars ($100.00) along with the above referenced bond fee. This application will be forwarded to the Patrol Division Commander or a designee who will review the application for all required documentation. This application and documentation will be presented to the Ridgeland Board of Aldermen for subsequent approval. **Please allow a minimum of 30 days to complete the process and receive approval.**

7). Event organizers should submit a map outlining the area where an event is to be held. Points of interest (entrance/exit points, first aid stations, etc…) shall be included on this map. If the event is a road race/walk, a map reflecting the proposed course route along with a description of the route shall be included. If any portion of the route will include sections of the Natchez Trace Parkway, you must first obtain approval from the Natchez Trace Chief (phone no. 662-680-4014; Ridgeland office 601-856-7321) and documentation reflecting this approval must be submitted with this application.

8). If the event is to be held at Old Trace Park and/or Madison Landing, you must first seek approval from PRVWSD Parks and Recreation (601-856-6319) and obtain a Facility Use Application which must be submitted with this application.

9). The number of event personnel will represent the number of people from the organization who will be assisting with the overall operation of the event. This will include any volunteers from the organization.

10). The arrangements for restroom facilities as addressed in the Ridgeland Code of Ordinances indicate 1 restroom per 150 people in attendance. These may be portable restrooms or existing restroom structures.

11). The event organizer or organization will be responsible for clean-up at the conclusion of the event. The City of Ridgeland encourages organizations to participate in a recycle program for any waste or debris to be discarded.

12). The first aid station located on the event site shall be manned by a state certified EMT.

13). The number of police/security personnel shall be determined by the expected crowd size. The event organizer may staff the event to satisfy this requirement through off-duty law enforcement personnel. The Ridgeland Police Department will assist the organizers if they choose the police department assigned option, or the event organizers may choose the self-hire option to select their own personnel to comply with the ordinance.

For Police Department Use Only

This application was received by the Ridgeland Police Department on 5/8/18 and has been reviewed by the appropriate personnel. This application has been APPROVED / DENIED by the Chief of Police or Designee. If approved by Ridgeland PD, this application will be submitted for consideration at the Ridgeland Mayor and Board of Alderman meeting to be held on 6-5-18.

Chief of Police or Designee: _____ DATE: 24 MAY 2018

Number of Overtime Officers: 11 Estimated OT Cost: $594.00

Additional Overtime Cost for City Departments: FIRE Ø P/W Ø REC/PARKS Ø

MRM

Mississippi Race Management

Ella Strong Triathlon 2018
Race Info

Prepared by: Allen Joiner - 601-213-2135; allen@msracemanagment.com

Race Synopsis

The 3rd annual Tri to be Ella Strong triathlon is presented by Strong Fitness Studio, produced by MS Race Management, and benefits the Palmer Home for Children. This is the 3rd consecutive year for Tri to be Ella Strong which will be hosted at Madison Healthplex Performance Center for the second year in a row. The event consists of an adult triathlon and a kids triathlon.

Adult Race Details

- Date – 6/30/17
- Start Time – 07:00
- Start/Finish Location – Madison Healthplex Performance Center
- USAT ID – 249475
- Distances
    - Swim – 300 meters (pool swim)
    - Bike – 9 miles
    - Run – 3 miles
- Divisions
    - Age Group – Time Trial Start (5 seconds between participants)
    - Clydesdale
    - Athena
- Projected participants – 100
- Point of Contact – Allen Joiner; MRM
    - 601-213-2135
    - allen@msracemanagment.com

Kids Race Details

- Date – 6/30/17
- Start Time – 08:30
- Start/Finish Location – Madison Healthplex Performance Center
- USAT ID - 249496
- Distances
    - Swim – 150 meters (pool swim)
    - Bike – 3 miles
    - Run – 1 mile
- Divisions
    - Junior (7 – 10)
    - Senior (11 – 14)
- Projected participants – 30
- Point of Contact – Allen Joiner; MRM
    - 601-213-2135
    - allen@msracemanagment.com

Projected Timeline

Friday June 29, 2018

15:00 – Packet pickup and onsite registration opens

18:00 – Packet pickup and onsite registration closes

Saturday June 30, 2018

05:00 – Packet pickup and onsite registration opens

06:30 – Packet pickup and onsite registration closes

07:00 – Start of adult swim

07:04 – First adult participant out of the water

07:05 – First adult participant on the bike

07:29 – First adult participant off the bike

07:30 – Last adult participant out of the water (based on 100 AG participants)

07:30 – First adult participant on the run course

07:50 – First adult finisher

08:24 – Last adult participant off the bike

08:30 – Start of kid swim

08:33 – First kid participant out of the water

08:35 – First Kid participant on the bike

08:44 – Last kid participant out of water

09:06 – First kid participant off the bike

09:07 – First kid participant on the run

09:09 – Last adult finisher

09:05 – Last kid participant off the bike

09:35 – Last kid finisher

Adult Swim Course Map

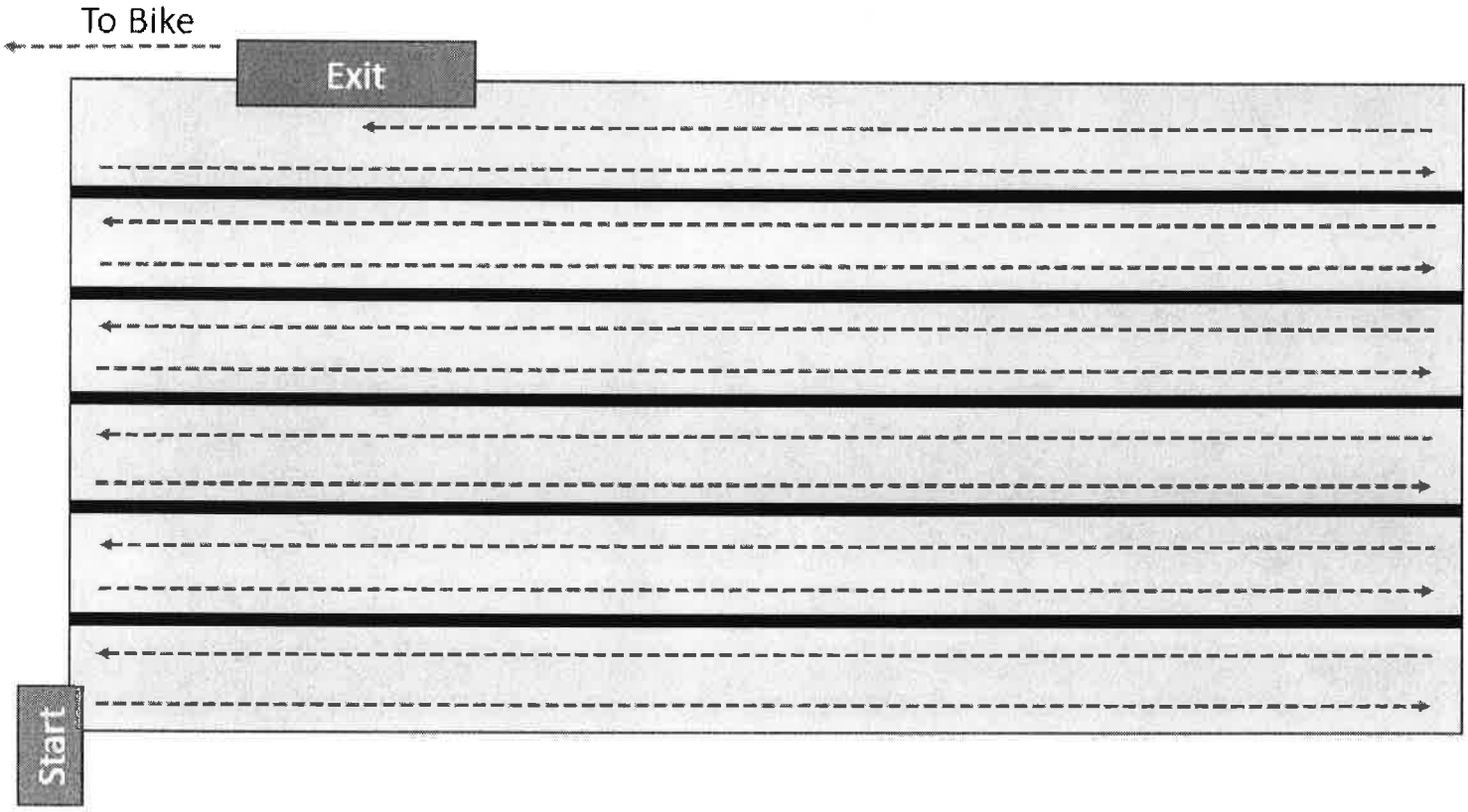

Adult Swim Course Description

The adult swim course is a serpentine course consisting of 300 meters of swimming. Participants will enter the water on the north east side of the pool and swim two laps in each lane then change to the next lane.

Kids Swim Course

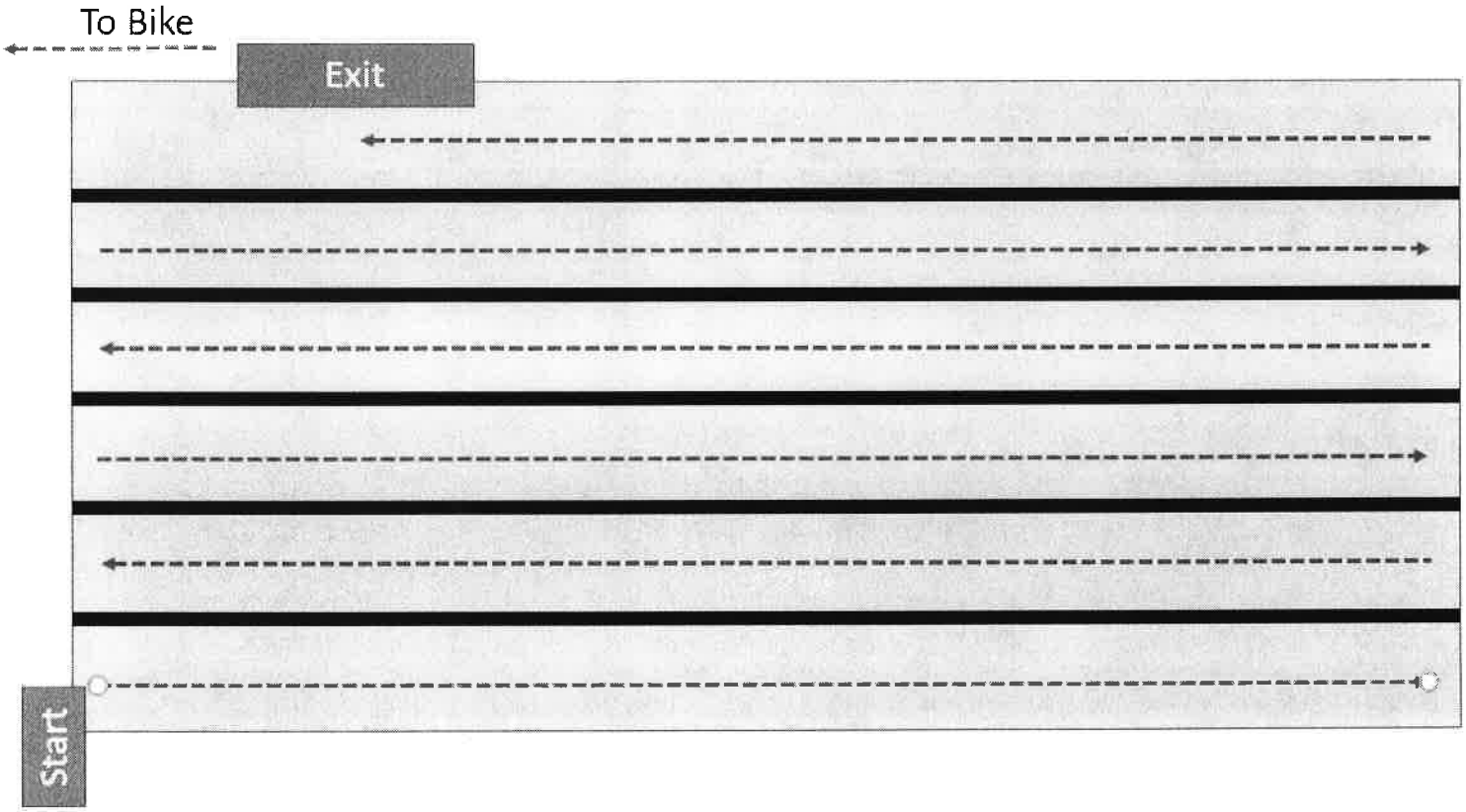

Adult Swim Course Description

The kids' swim course is a serpentine course consisting of 150 meters of swimming. Participants will enter the water on the north east side of the pool and swim one lap in each lane then change to the next lane.

Adult Bike Course Map

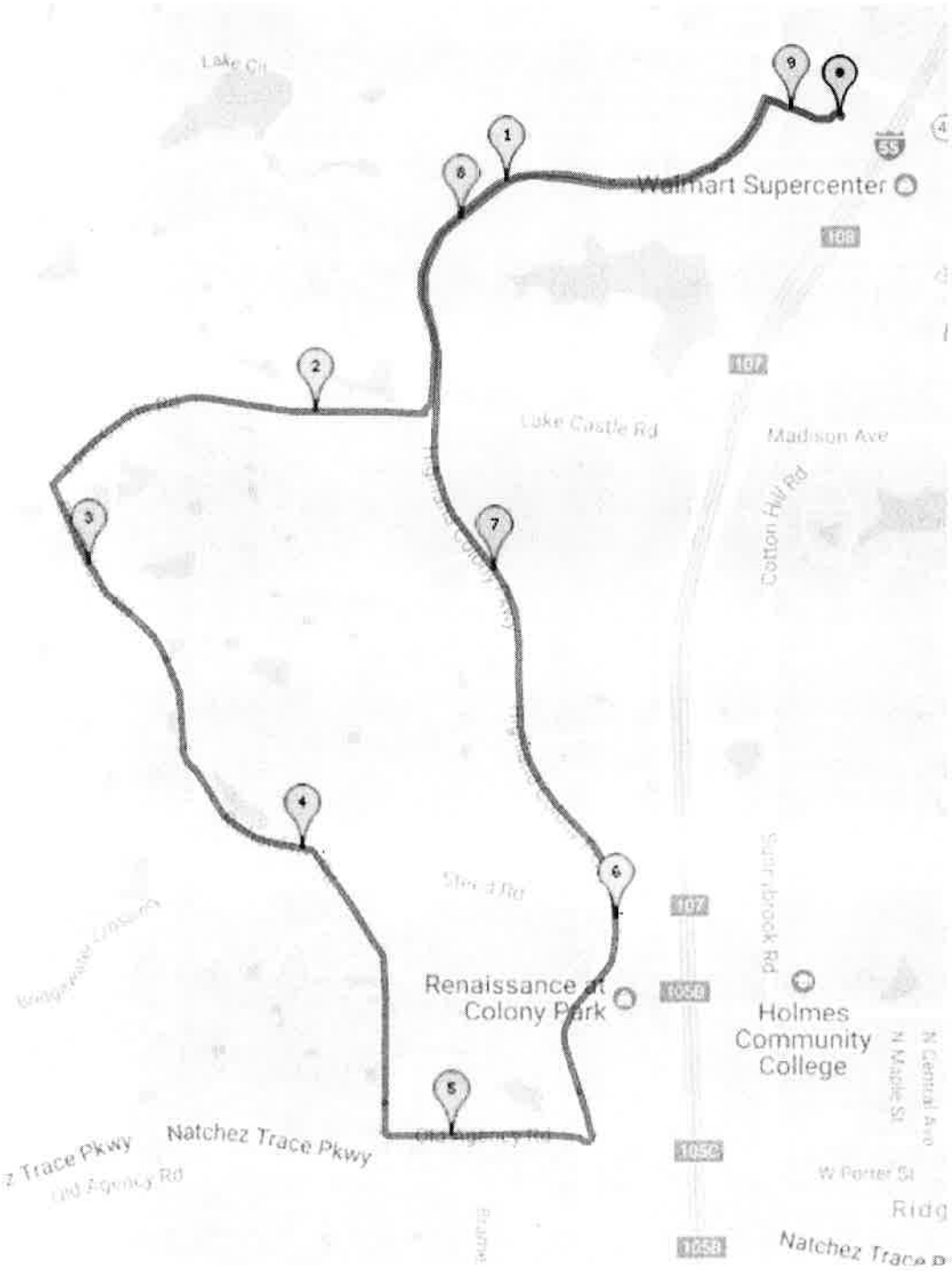

Bike Course Turn by Turn

- Left turn onto Highland Colony Parkway
- Right turn onto Lake Castle Rd.
- Left turn onto Richardson Rd.
- Right turn onto Old Agency Rd.
- Left turn onto Highland Colony Parkway
- Right turn into Healthplex

Digital map located at http://www.mappedometer.com/?maproute=674044

Property of MS Race Management – 601-213-2135

Kids Bike Course Map

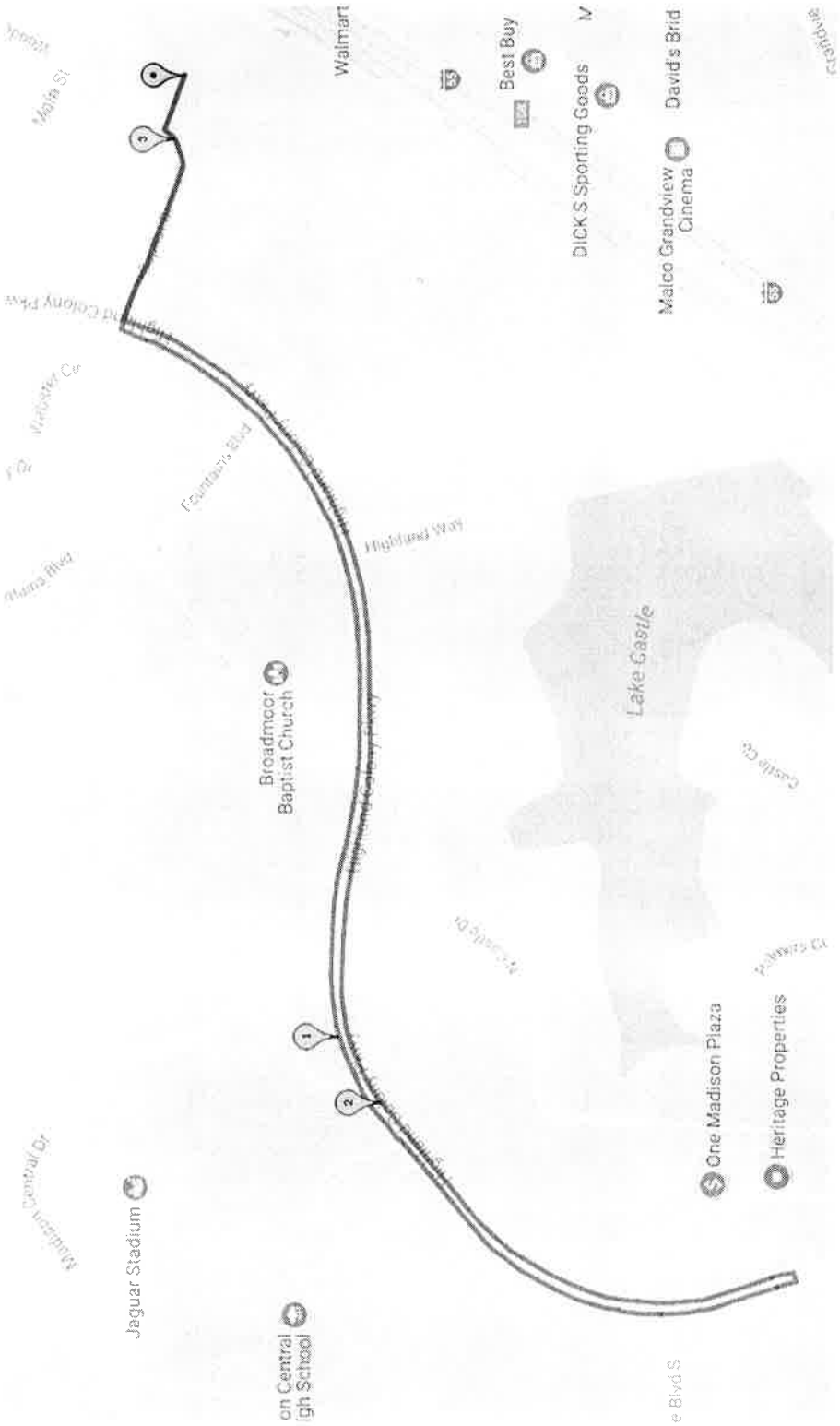

Adult Run Course Turn by Turn

- Left turn onto Highland Colony Parkway
- Travel 1.3 miles and make a U-turn
- Travel 1.3 miles and turn right onto Baptist Dr.
- Right turn to transition

Digital map located at http://www.mappedometer.com/?maproute=674164

Adult Run Course Map

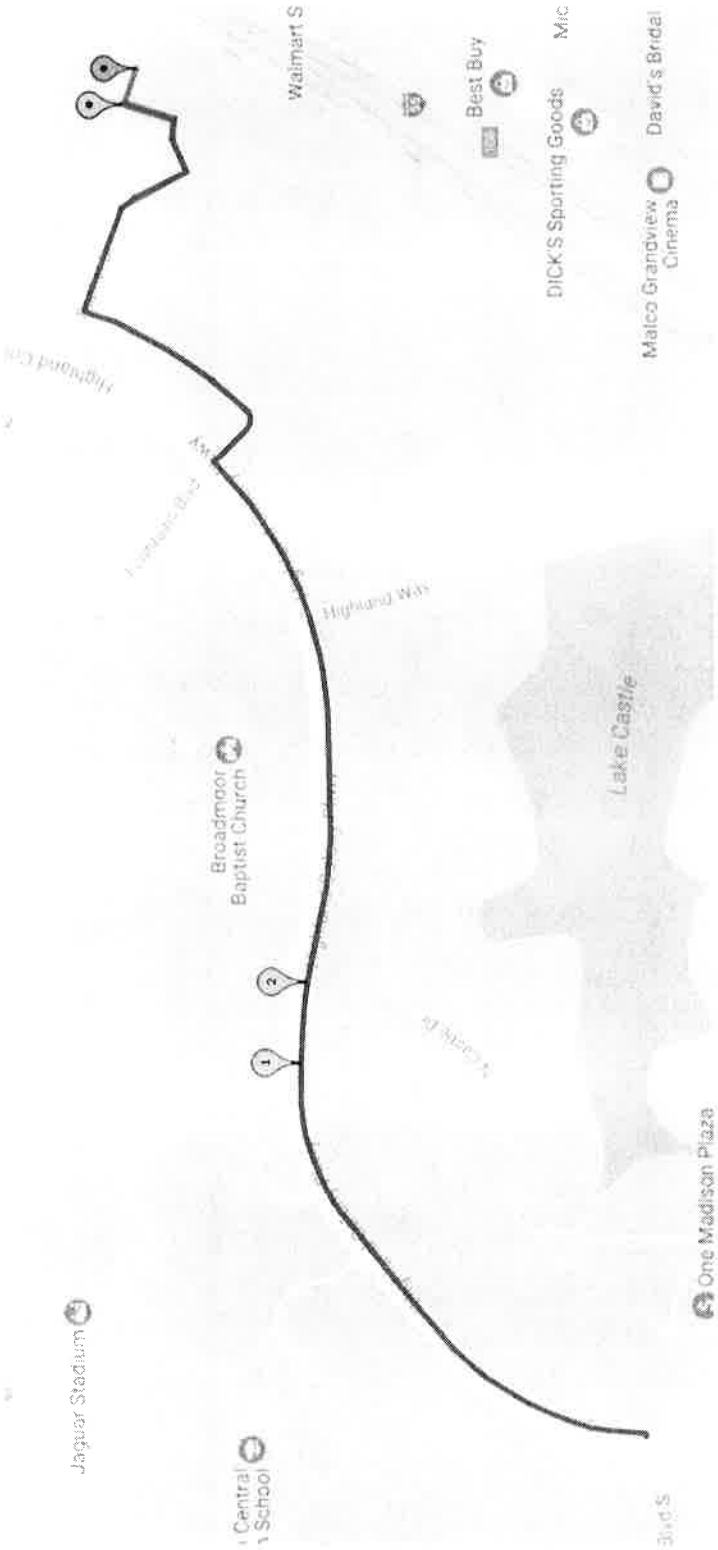

Adult Run Course Turn by Turn

- Left turn behind Walgreens
- Left turn onto Highland Colony Parkway
- Travel 1.3 miles to the entrance of Cypress Lake and make a U-turn
- Travel 1.3 miles and turn right behind Walgreens
- Right turn onto Baptist Dr.
- Right turn to go behind Baptist Health Clinic

Digital map located at http://www.mappedometer.com/?maproute=674046

Kids Run Course Map

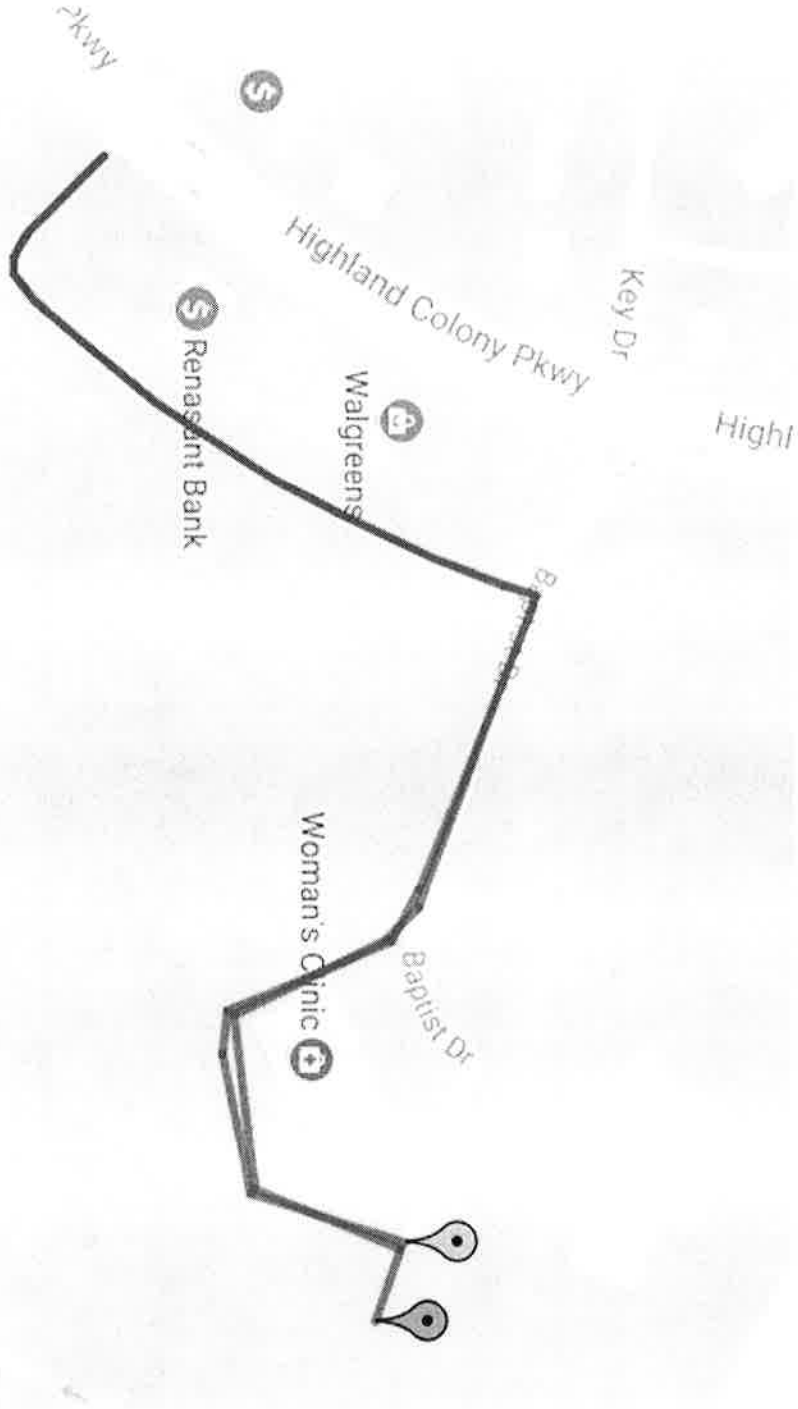

Adult Run Course Turn by Turn

- Left turn behind Walgreens
- U-turn at Highland Colony Parkway
- Right turn onto Baptist Dr.
- Right turn to go behind Baptist Health Clinic

Digital map located at http://www.mappedometer.com/?maproute=674165

Transition Map

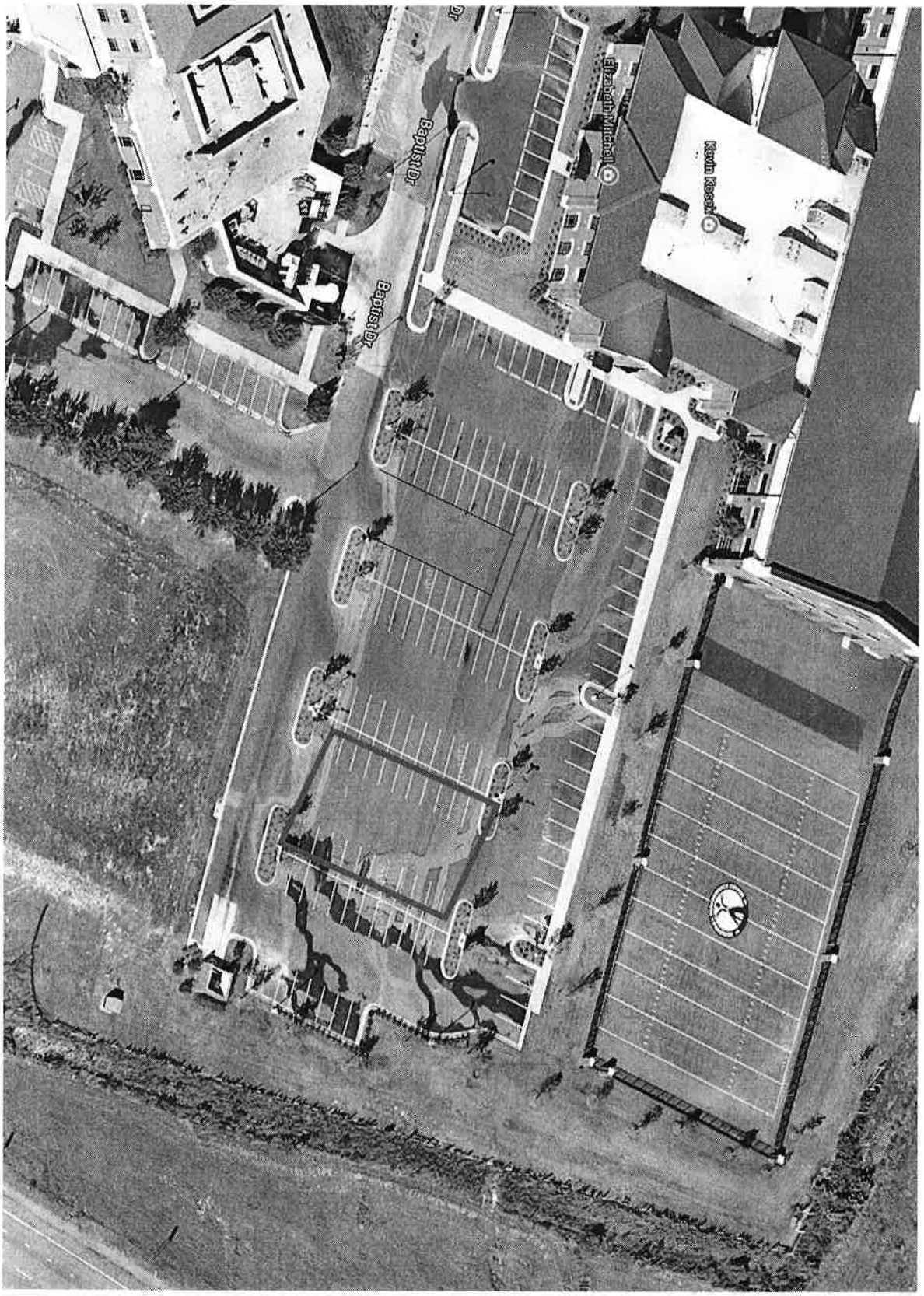

Post Assignment

Ella Strong Triathlon

June 30, 2018

Officer	Badge #	Patrol Car	Post Assignment	Post #
Cpl. Chapin	85	MC	Command	Rover
J. Myers	168	343	Lake Castle/Richardson	1
T. Anderson	171	315	Steed Rd./Richardson Rd.	2
S. Barnett	167	306	Old Agency Rd/ Greenwood Crossing	3
T. Sandifer	177	TBA	Round-a-bout west side	4
K. Travis	178	TBA	Round-a-bout east side	5
M. Hutton	175	324	HCP/ Starbucks intersection	6
Berry, Brice	170	MC/314	HCP/ West Parkway PL	7
J. Finnegan	136	MC/320	HCP/ Steed Rd	8
B. Alexander	132	323	HCP/ Township Ave.	9
T. Rogers	176	318	HCP/ Colony Park Blvd.	10

The race will begin at 0700 hrs. but the bicyclists are expected to enter the City of Ridgeland's limits at approximately 0730 hrs. or perhaps earlier. The event organizer is Allen Joiner who can be contacted at 601-213-2135 to coordinate the event with him as the triathlon commences.

Officers assigned for traffic control during this event will be required to attend a roll call session beginning at 0630 hours at Ridgeland PD and immediately upon briefing, be on their assigned post no later than 0700 hours.

Officers assigned will wear the special event uniform consisting of a gray shirt and black BDU's with normal patrol duty gear. Although this event is in daylight hours, it is recommended that officers utilize an orange reflective vest to enhance visibility at intersections. Vehicle assignments will be made at roll call briefing for those officers requiring same. Detail will use Tac 1 radio channel.

ROUTE: The bicyclists will travel south from Madison on Highland Colony to Lake Castle Rd. where they will head west to Richardson Road, where they will take a left and travel south to Steed Rd. where they will take a right on Steed Rd. and travel to Old Agency Rd to the Round-a-Bout to north bound Highland Colony Parkway. The cyclist will continue north on Highland Colony Parkway in the left lane back to the City of Madison.

*This is a timed event and cyclists will be traveling a rate of speed that traffic will have to be held early to ensure participant safety.

Post 1

Officer will work traffic to ensure the cyclists can turn left onto Richardson Rd.

Post 2

Officer will work traffic to ensure cyclists can turn right onto Steed Rd.

Post 3

Officer will work traffic to ensure cyclists have right of way.

Post 4/5

Officers will hold all traffic in the round-a-bout to ensure the cyclist can make it through the round-a-bout as they transition from east to north. Officers will work traffic through the round-a-bout between the cyclists.

Post 6

Officer will hold all cross traffic until cyclists have passed ensuring right of way.

Post 7

Officer will hold all cross traffic until cyclists have passed ensuring right of way.

Post 8

Officer will hold all cross traffic until cyclists have passed ensuring right of way.

Post 9

Officer will hold all cross traffic until cyclists have passed ensuring right of way.

Post 10

Officer will hold all cross traffic until cyclists have passed ensuring right of way.

MISSISSIPPI RACE MANAGEMENT, LLC
100 FOUNTAINS BLVD
MADISON, MS 39110

85-164/653
04

DATE May 8th 2018

PAY TO THE ORDER OF City of Ridgeland $ 100.00

One Hundred and no/— DOLLARS

Security Features Details on Back

RiverHills Bank

Port Gibson • Vicksburg • Madison
www.riverhillsbank.com

FOR Deposit Ella Strong

MP

⑆065301647⑆ 6754535⑈

MISSISSIPPI RACE MANAGEMENT, LLC
100 FOUNTAINS BLVD
MADISON, MS 39110

85-164/653
04

DATE May 8th 2018

PAY TO THE ORDER OF City of Ridgeland $ 1,000.00

One Thousand dollar and no/— DOLLARS

Security Features Details on Back

RiverHills Bank

Port Gibson • Vicksburg • Madison
www.riverhillsbank.com

FOR Deposit - Ella Strong

MP

⑆065301647⑆ 6754535⑈

the city of RIDGELAND

police department

May 31, 2018

TO: Mayor & Board of Aldermen

FROM: John R. Neal, Chief of Police

SUBJECT: Special Event – Krispy Kreme (National Doughnut Day)

I have attached a request for a Special Event Permit from Roosevelt Johnson with Krispy Kreme Doughnuts. This event is National Doughnut Day scheduled Friday, June 1, 2018 from 6:00 a.m. until 11:00 p.m. to be held at 1100 East County Line Road.

This event will generate overtime for the police department and there will be 2 posts that need to be manned for 12 hours each for traffic control. At a rate of $27.00 per hour, the expected overtime cost is $648.00.

Attached are checks in the amount of $100.00 and $1000.00 representing requisite filing fee and bond money.

Your consideration and approval will be greatly appreciated.

CC: Lt. Tony Willridge

115 west school street · ridgeland, ms 39157
ph: 601.856.2121 · www.ridgelandms.org

Gene F. McGee, cmo - mayor · John R. Neal - chief of police
board of aldermen: D.I. Smith, cmo - at-large · Ken Heard, cmo - ward 1 · Chuck Gautier, cmo - ward 2
Kevin Holder, cmo, mayor pro tempore - ward 3 · Brian P. Ramsey, cmo - ward 4 · Bill Lee - ward 5 · Wesley Hamlin, cmo - ward 6

the city of RIDGELAND

CITY OF RIDGELAND
SPECIAL EVENT PERMIT APPLICATION

(Please allow minimum 30 days for approval)

EVENT NAME: National Doughnut Day

EVENT LOCATION: 1100 East Countyline Road (Krispy Kreme)

EVENT DATE: Beginning June 1 to Ending June 1 Multiple Days: ☐ YES ☒ NO

EVENT HOURS: Beginning 10:00 am to Ending 11:00 am.

TYPE OF EVENT: National Doughnut Day Promotion

EVENT POINT OF CONTACT: Roosevelt Johnson CELL NUMBER: (769) 798-9901
(This person must remain on scene during the entire event)

NAME OF ORGANIZATION: Krispy Kreme

ADDRESS: 1100 East Countyline Rd. CITY/STATE/ZIP: Ridgeland, MS, 39157

ESTIMATED CROWD SIZE: open NUMBER OF EVENT PERSONNEL: 35

ARRANGEMENTS FOR RESTROOM FACILITIES: ☒ YES ☐ NO LOCATION:

ARRANGEMENTS FOR SITE CLEAN-UP: ☒ YES ☐ NO DETAILS:

RECYCLING PROGRAM FOR WASTE: ☐ YES ☒ NO DETAILS:

The City of Ridgeland will assist organizers in planning and locating recycle bins for recyclable waste through local companies. Event organizers are encouraged to maintain the City of Ridgeland's vision of a green environment by having your event recycle its waste.

Will the organizers of this event use the services of an UAS (unmanned aircraft system): ☐ YES ☒ NO
If Yes, who is the operator of the system: Cell Number:
If an UAS/Drone will be utilized, a copy of the following required documents must be attached to this application:

- Section 333 Exemption or Aircraft Certification
- Certificate of Authorization (COA)
- Aircraft Registration and Markings
- Pilot Certificate

FIRST AID/MEDICAL STATION(s): ☐ YES ☒ NO LOCATION(s):

POLICE/SECURITY PERSONNEL REQUIRED: Yes ☒ Police Dept. Assigned ☐ Self-Hired ☐ Not Applicable

ASSISTANCE FROM OTHER CITY DEPARTMENTS: ☐ Fire Department ☐ Public Works/Streets ☐ Recreation/Parks

Applicant Printed Name: Roosevelt Johnson Contact Number: 769-798-9901

Applicant Signature: Date: 5/29/18

Application Instructions

1). You must present to the Chief of Police or his designee your plan for parking and traffic control. You must state in this plan whether or not police or private security personnel will be needed to direct and handle traffic and parking.

2). City of Ridgeland Special Events Ordinance section 10-33(2) requires adequate security be provided at special events. This requirement is one security officer for every 400 people in attendance. A private security company may be used but preference shall be given to the hiring of off duty personnel. The assistance from Ridgeland Police Department for road course races/walks to secure intersections shall not be considered as part of the security requirement. The personnel assigned for traffic control are in addition to any requirement for on site security personnel required in the ordinance.

3). If the event is to have outdoor music, a Permit to Play on Premises Music will be required from the applicant agreeing to comply with the noise ordinance of the City of Ridgeland, MS.

4). If there is a need for Police Dept., Fire Dept., Public Works Dept. and/or Rec/Parks Dept. personnel to work in controlling the special event, the applicant will agree to pay this cost from the filing of a bond fee.

5). The applicant may be required to post a bond fee in the minimum amount of one thousand dollars ($1,000.00) with the City Clerk. This is to ensure that the event area is immediately cleaned up after its conclusion, and any City employee who works overtime as a result of the special event, will be compensated from the bond proceeds.

6). Submit the above application and information to the Office of the Chief of Police with a non-refundable filing fee of one hundred dollars ($100.00) along with the above referenced bond fee. This application will be forwarded to the Patrol Division Commander or a designee who will review the application for all required documentation. This application and documentation will be presented to the Ridgeland Board of Aldermen for subsequent approval. **Please allow a minimum of 30 days to complete the process and receive approval.**

7). Event organizers should submit a map outlining the area where an event is to be held. Points of interest (entrance/exit points, first aid stations, etc…) shall be included on this map. If the event is a road race/walk, a map reflecting the proposed course route along with a description of the route shall be included. If any portion of the route will include sections of the Natchez Trace Parkway, you must first obtain approval from the Natchez Trace Chief (phone no. 662-680-4014; Ridgeland office 601-856-7321) and documentation reflecting this approval must be submitted with this application.

8). If the event is to be held at Old Trace Park and/or Madison Landing, you must first seek approval from PRVWSD Parks and Recreation (601-856-6319) and obtain a Facility Use Application which must be submitted with this application.

9). The number of event personnel will represent the number of people from the organization who will be assisting with the overall operation of the event. This will include any volunteers from the organization.

10). The arrangements for restroom facilities as addressed in the Ridgeland Code of Ordinances indicate 1 restroom per 150 people in attendance. These may be portable restrooms or existing restroom structures.

11). The event organizer or organization will be responsible for clean-up at the conclusion of the event. The City of Ridgeland encourages organizations to participate in a recycle program for any waste or debris to be discarded.

12). The first aid station located on the event site shall be manned by a state certified EMT.

13). The number of police/security personnel shall be determined by the expected crowd size. The event organizer may staff the event to satisfy this requirement through off-duty law enforcement personnel. The Ridgeland Police Department will assist the organizers if they choose the police department assigned option, or the event organizers may choose the self-hire option to select their own personnel to comply with the ordinance.

For Police Department Use Only

This application was received by the Ridgeland Police Department on 5/29/18 2:31p.m. and has been reviewed by the appropriate personnel. This application has been APPROVED / DENIED by the Chief of Police or Designee. If approved by Ridgeland PD, this application will be submitted for consideration at the Ridgeland Mayor and Board of Alderman meeting to be held on 6-5-18.

Chief of Police or Designee: [signature] DATE: 31 MAY 2018

Number of Overtime Officers: 2 Estimated OT Cost: $ 648.00

Additional Overtime Cost for City Departments: FIRE Ø P/W Ø REC/PARKS Ø

MoneyGram.

INTERNATIONAL MONEY ORDER 86-186 / 1031

05/29/2018

To Validate: Touch the stop sign, then watch it fade and reappear

20791446477
MONEY ORDER - WM

MONEY ORDER NUMBER R2079144647 70

CALL 1-800-542-3590 TO VERIFY

PAY TO THE ORDER OF:/ PAGAR A LA ORDEN DE: City of Ridgeland

IMPORTANT - SEE BACK BEFORE CASHING

MP

PURCHASER, SIGNER FOR DRAWER / COMPRADOR, FIRMA DEL LIBRADOR

PURCHASER, BY SIGNING YOU AGREE TO THE SERVICE CHARGE AND OTHER TERMS ON THE REVERSE SIDE

ADDRESS:/ DIRECCIÓN:

Payable Through
BOKF, NA
Enid, OK

ISSUER/DRAWER:
MONEYGRAM PAYMENT SYSTEMS, INC.

PAY EXACTLY

$**100.00

ONE HUNDRED ****
DOLLARS 00 CENTS

60528087549875
272260014913247 7

⑆103101864⑆2079 14464770⑈ 90

PRINTED ON LINEMARK PAPER - HOLD TO LIGHT TO VIEW. FOR ADDITIONAL SECURITY FEATURES SEE BACK.

0067200 Office AU #

11-24 / 1210(8)

PERSONAL MONEY ORDER

6720013118

Remitter: KRISPY KREME DOUGHNUT CORPORATION
Operator I.D.: u648745

May 30, 2018

PAY TO THE ORDER OF ***RIDGELAND POLICE DEPARYTMENT ***

One thousand dollars and no cents

$1,000.00

Payee Address:
Memo:

WELLS FARGO BANK, N.A.
6114 RIDGEWOOD RD
JACKSON, MS 39211
FOR INQUIRIES CALL (480) 394-3122

VOID IF OVER US $ 1,000.00

Purchaser's Signature

⑈6720013118⑈ ⑆121000248⑆4861 509404⑈

the city of RIDGELAND

public works

MEMORANDUM

TO: The Mayor and Board of Aldermen

FROM: Christopher W. Bryson, P.E., City Engineer

DATE: May 29, 2018

RE: **CONTRACTOR'S FINAL PROJECT CLOSE-OUT DOCUMENTS**
Final Change Order No. 1; Final Pay Estimate No. 1; Final Project Close-Out Submittals
Dickerson & Bowen, Inc.
East County Line Road Rehabilitation Project
City of Ridgeland, Madison County, Mississippi

We respectfully request the Mayor and Board of Aldermen approve the attached Final Change Order No. 1, Final Contractor Pay Estimate No. 1, and Final Project Close-Out Submittals for the construction contract with Dickerson & Bowen, Inc. for the East County Line Road Rehabilitation project. The Contractor has satisfied the requirements of the Contract Specifications, and is therefore eligible to receive final payment. This project was considered substantially complete and ready to serve its intended purpose on *May 22, 2018*.

The proposed Final Contract Change Order No. 1 decreases the Total Contract Amount by $194,317.18 (*15%*). This decrease is a result of quantity underruns associated with not encountering any failed base pavement areas during construction, and also includes adjustments made to the Contract quantities to reflect the actual amount used during construction. Upon approval, the Mayor will need to sign all five (5) copies of Final Contract Change Order No. 1, and return to the Public Works Department for distribution.

The proposed First and Final Contractor Pay Estimate No. 1 in the amount of $1,100,947.42 to Dickerson & Bowen, Inc. includes all work completed on the project which began on March 1, 2018 and ended on May 22, 2018. In accordance with the project's Interlocal Agreement with the City of Jackson which became effective on March 28, 2017, the City of Jackson will reimburse 50% of this Pay Estimate No. 1 in the amount of $550,473.71. Madison County will reimburse the City of Ridgeland's 50% responsibility of this Pay Estimate No. 1 in accordance with a separate Interlocal Agreement with Madison County dated July 5, 2016. Upon your approval of the Final Contractor Pay Estimate No. 1, the Public Works Department will submit written requests for reimbursement to the City of Jackson and Madison County.

Within the Final Project Close-Out Documents, Dickerson & Bowen, Inc. has provided the City of Ridgeland with a Consent of Surety to Final Payment signed by Hartford Accident and Indemnity Company. Also included in the Contract Close-Out Documents is the Contractor's warranty statement which guarantees all materials on the project to be free from defect for a period of 12 months following the date of Final Acceptance *(May 22, 2018)*; therefore the warranty period for this project will expire on *May 22, 2019*.

Thank you for your consideration of our request. Please contact me if you have any questions.

Cc: John M. McCollum, Public Works Director

mailing address: p.o. box 217 · ridgeland, ms 39158
street address: 304 highway 51 · ridgeland, ms 39157
ph: 601.853.2027 · fax: 601.853.2019 · www.ridgelandms.org

Gene F. McGee, cmo - mayor · John M. McCollum - director of public works

board of aldermen: D.I. Smith, cmo - at-large • Ken Heard, cmo - ward 1 • Chuck Gautier, cmo - ward 2
Kevin Holder, cmo, mayor pro tempore - ward 3 • Brian P. Ramsey, cmo - ward 4 • Bill Lee - ward 5 • Wesley Hamlin, cmo - ward 6

NDWILF22
4/27/2005

CONTRACT CHANGE ORDER NO. ONE (1)

OWNER: **CITY OF RIDGELAND, MISSISSIPPI**

CONTRACTOR: **DICKERSON & BOWEN, INC.**

DATE: **May 29, 2018**

CHANGE ORDER NUMBER: **ONE (1)**

PROJECT NAME: **EAST COUNTY LINE ROAD REHABILITATION**

REASON FOR CHANGE:
THE PURPOSE OF THIS CHANGE ORDER IS TO ADJUST THE CONTRACT QUANTITY TO REFLECT THE FINAL AMOUNT OF QUANTITIES USED DURING CONSTRUCTION.

THE CONTRACTOR IS HEREBY REQUESTED TO COMPLY WITH THE FOLLOWING CHANGES FROM THE CONTRACT PLANS, SPECIFICATIONS AND CONTRACT DOCUMENTS (USE ADDITIONAL SHEETS IF REQUIRED):

ITEM NO.	DESCRIPTION OF CHANGE(S) (QUANTITIES, ETC.)	TOTAL CONTRACT
	See Attached Sheet for Item Breakdown	
ORIGINAL CONTRACT AMOUNT:		$ 1,295,264.60
CURRENT CONTRACT AMOUNT:		$ 1,295,264.60
THIS CONTRACT CHANGE:		$ 194,317.18
REVISED CONTRACT AMOUNT:		$ 1,100,947.42
CURRENT CONTRACT COMPLETION DATE:		September 28, 2018
TIME EXTENSION REQUIRED BY CHANGE:		**0 DAYS**
REVISED CONTRACT COMPLETION DATE:		**SEPTEMBER 28, 2018**

THIS CONTRACT CHANGE ORDER SHALL BECOME AN AMENDMENT TO THE CONTRACT AND ALL PROVISIONS OF THE CONTRACT WILL APPLY.

RECOMMENDED BY: _____ 5/29/2018
ENGINEER: Christopher W. Bryson, P.E., City of Ridgeland — DATE

ACCEPTED BY: _____ 5/29/18
CONTRACTOR: Don L. Glenn, Project Manager, Dickerson & Bowen, Inc. — DATE

APPROVED BY: _____
OWNER: Gene F. McGee, Mayor, City of Ridgeland — DATE

FINAL CONTRACT CHANGE ORDER NO. ONE (1)

CONTRACT FOR: EAST COUNTY LINE ROAD REHABILITATION
OWNER: **CITY OF RIDGELAND**
TO: **DICKERSON & BOWEN, INC.**
(Contractor)
Date: **MAY 29, 2018**

ORIGINAL CONTRACT AMOUNT: **$1,295,264.60**
You are hereby requested to comply with the following changes from the contract plans and specifications:

Item No.	Description	Unit	Contract Unit Cost	Contract Quantity	Contract Amount	Change Order Unit Cost	Change Order Quantity	Change Order Amount	Increase / (Decrease) in Contract Quantity	Increase / (Decrease) in Contract Amount
BB-1	MOBILIZATION	LS	$ 88,000.00	1	$ 88,000.00	$ 88,000.00	1	$ 88,000.00	0	$ -
BB-2	MAINTENANCE OF TRAFFIC	LS	$ 448,000.00	1	$ 448,000.00	$ 448,000.00	1	$ 448,000.00	0	$ -
BB-3	MATERIALS TESTING	LS	$ 35,000.00	1	$ 35,000.00	$ 35,000.00	1	$ 35,000.00	0	$ -
BB-4	REMOVAL OF CONCRETE PAVEMENT, ALL DEPTHS	CY	$ 330.00	10	$ 3,300.00	$ 330.00	0	$ -	(10)	$ (3,300.00)
BB-5	UNSUITABLE SUBGRADE EXCAVATION	CY	$ 46.15	350	$ 16,152.50	$ 46.15	0	$ -	(350)	$ (16,152.50)
BB-6	SIZE 610 CRUSHED STONE BASE	TON	$ 75.00	400	$ 30,000.00	$ 75.00	0	$ -	(400)	$ (30,000.00)
BB-7	ASPHALT FAILED BASE AREA DIGOUT AND REPAIR	TON	$ 124.60	1350	$ 168,210.00	$ 124.60	0	$ -	(1,350)	$ (168,210.00)
BB-8	COLD MILLING OF BITUMINOUS PAVEMENT, ALL DEPTHS	TON	$ 47.60	2400	$ 114,240.00	$ 47.60	2,359.83	$ 112,327.91	(40.17)	$ (1,912.09)
BB-9	HOT MIX ASPHALT SURFACE COURSE, SC-1A	TON	$ 95.40	2400	$ 228,960.00	$ 95.40	2,587	$ 246,752.10	186.50	$ 17,792.10
BB-10	ADJUSTMENT OF CASTINGS, GRATINGS & UTILITY APPURTENANC	EA	$ 475.00	12	$ 5,700.00	$ 475.00	9	$ 4,275.00	(3)	$ (1,425.00)
BB-11	VEHICLE DETECTION VIDEO CAMERA ASSEMBLY, 1 SENSOR	EA	$ 3,830.00	12	$ 45,960.00	$ 3,830.00	12	$ 45,960.00	0	$ -
BB-12	VEHICLE DETECTION VIDEO CAMERA SYSTEM	EA	$ 9,250.00	3	$ 27,750.00	$ 9,250.00	3	$ 27,750.00	0	$ -
BB-13	CONTROLLER CABINET ASSEMBLY	EA	$ 17,025.00	3	$ 51,075.00	$ 17,025.00	3	$ 51,075.00	0	$ -
BB-14	4" TEMPORARY TRAFFIC STRIPE, SKIP WHITE	LF	$ 1.07	9730	$ 10,411.10	$ 1.07	5,607	$ 5,999.49	(4,123)	$ (4,411.61)
BB-15	4" TEMPORARY TRAFFIC STRIPE, DETAIL WHITE	LF	$ 1.07	3340	$ 3,573.80	$ 1.07	3,106	$ 3,323.42	(234)	$ (250.38)
BB-16	TEMPORARY LEGEND, WHITE	SF	$ 2.68	1300	$ 3,484.00	$ 2.68	216	$ 578.88	(1,084)	$ (2,905.12)
BB-17	6" THERMOPLASTIC TRAFFIC STRIPE, SKIP WHITE, 90-mil	LF	$ 1.07	5000	$ 5,350.00	$ 1.07	6,240	$ 6,676.80	1,240	$ 1,326.80
BB-18	6" THERMOPLASTIC TRAFFIC STRIPE, DETAIL WHITE, 90-mil	LF	$ 1.34	1100	$ 1,474.00	$ 1.34	5,173	$ 6,931.82	4,073	$ 5,457.82
BB-19	THERMOPLASTIC LEGEND, WHITE, 120-mil	SF	$ 5.35	1300	$ 6,955.00	$ 5.35	3,052	$ 16,326.06	1,751.60	$ 9,371.06
BB-20	RED-CLEAR REFLECTIVE RAISED PAVEMENT MARKERS	EA	$ 6.42	260	$ 1,669.20	$ 6.42	307	$ 1,970.94	47	$ 301.74
TOTAL					**$ 1,295,264.60**			**$ 1,100,947.42**		**$ (194,317.18)**

The Current Contract Total is:
One Million, Two Hundred Ninety Five Thousand, Two Hundred Sixty Four and 60/100s Dollars **$ 1,295,264.60**

The amount of the Current Contract will be (**Decreased**) (~~Increased~~) (~~Unchanged~~) by the Sum of
One Hundred Ninety Four Thousand, Three Hundred Seventeen and 18/100s Dollars **$ (194,317.18)**

The FINAL Contract Total including this and previous Change Orders will be:
One Million, One Hundred Thousand, Nine Hundred Forty Seven and 42/100s Dollars **$ 1,100,947.42**

The Contract Period for Completions will be (~~Increased~~) (~~Decreased~~) (Unchanged): **0 Days**

This document will become a supplement to the Contract and all provisions will apply hereto.

Approved: _____ (Owner) _____ (Date)
Gene F. McGee, Mayor, City of Ridgeland

Recommended: _____ (Owner's Engineer) 5/29/18 (Date)
Christopher W. Bryson, P.E., City Engineer, City of Ridgeland

Accepted: _____ (Contractor) 5/29/18 (Date)
Don L. Glenn, Project Manager, Dickerson & Bowen, Inc.

APPLICATION AND CERTIFICATE FOR PAYMENT

TO OWNER: City of Ridgeland
304 Highway 51
Ridgeland, Ms.,39157

PROJECT: East Co. Line Road Rehab.
Project No. ST-17-00

APPLICATION #: One(final)
PERIOD TO: 04/30/18
PROJECT NOS: ST-17-00

CONTRACT DATE: 11/29/17

Distribution to:

5	Owner
	Const. Mgr
	Engineer
1	Contractor

FROM CONTRACTOR:
Dickerson & Bowen Inc.
P.O. Box 22766
Jackson, Ms., 39225

VIA ARCHITECT:

CONTRACT FOR:

CONTRACTOR'S APPLICATION FOR PAYMENT

Application is made for payment, as shown below, in connection with the Contract.
Continuation Sheet is attached.

1. ORIGINAL CONTRACT SUM----------	$	1,295,264.60
2. Net change by Change Orders----------	$	
3. CONTRACT SUM TO DATE (Line 1 +/- 2)	$	1,295,264.60
4. TOTAL COMPLETED & STORED TO DATE-$		1,100,947.42
5. RETAINAGE:		
a. ____ % of Completed Work	$	
____		
6. TOTAL EARNED LESS RETAINAGE---------	$	1,100,947.42
7. LESS PREVIOUS CERTIFICATES FOR PAYMENT	$	$ -
8. CURRENT PAYMENT DUE----------	$	1,100,947.42
9. BALANCE TO FINISH, INCLUDING RETAINAGE (Line 3 less Line 6)	$	194,317.18

CHANGE ORDER SUMMARY	ADDITIONS	DEDUCTIONS
Total changes approved in previous months by Owner		
Total approved this Month		
TOTALS		
NET CHANGES by Change Order		

The undersigned Contractor certifies that to the best of the Contractor's knowledge, information and belief the Work covered by this Application for Payment has been completed in accordance with the Contract Documents, that all amounts have been paid by the Contractor for Work for which previous Certificates for Payment were issued and payments received from the Owner, and that current payment shown therein is now due.

CONTRACTOR: Dickerson & Bowen Inc.

By: Don Clem Date: May 2, 2018

State of: Mississippi
County of: Hinds
Subscribed and sworn to before me this 2 day of May,2018

Notary Public:
My Commission expires: Nov. 17, 2019

STATE OF MISSISSIPPI NOTARY PUBLIC ID # 114446 MARK A. HUGHES Commission Expires Nov 17, 2019 LINCOLN COUNTY

CONTINUATION SHEET

ATTACHMENT TO PAY APPLICATION

PROJECT: East County Line Rehabilitation
Ridgeland Project No. ST-17-00

Item No.	Description of Work	Contract Unit Prices $	Contract Quantities units	Contract Amount $
BB-1	**Mobilization**	$88,000.00	1.00	$88,000.00
BB-2	**Maintenance of Traffic**	$448,000.00	1.00	$448,000.00
BB-3	**Materials Testing**	$35,000.00	1.00	$35,000.00
BB-4	**Removal of Conc. Pvt. All Depths**	$330.00	10.00	$3,300.00
BB-5	**Unsuitable Subgrade Excavation**	$46.15	350.00	$16,152.50
BB-6	**Size 610 Crushed Stone**	$75.00	400.00	$30,000.00
BB-7	**Asphalt Failed Base Area Digout**	$124.60	1,350.00	$168,210.00
BB8	**Cold Milling Bit. Pvt**	$47.60	2,400.00	$114,240.00
BB-9	**Hot Mix Surface**	$95.40	2,400.00	$228,960.00
BB-10	**Adjust Casting & Utility Appurtenances**	$475.00	12.00	$5,700.00
BB-11	**Vehicle Detection Camera 1 sensor**	$3,830.00	12.00	$45,960.00
BB-12	**Vehicle Detection Camera'**	$9,250.00	3.00	$27,750.00
BB-13	**Controller Cabinet**	$17,025.00	3.00	$51,075.00
BB-14	**4" Temp Stripe Skip White**	$1.07	9,730.00	$10,411.10
BB-15	**4" Temp Stripe Detail White**	$1.07	3,340.00	$3,573.80
BB-16	**Temporary Legend White**	$2.68	1,300.00	$3,484.00
BB-17	**6" Thermo Stripe Skip White**	$1.07	5,000.00	$5,350.00
BB-18	**6" Thermo Stripe Detail Wite**	$1.34	1,100.00	$1,474.00
BB-19	**Thermo Legend White**	$5.35	1,300.00	$6,955.00
BB-20	**Red-Clear Raised Markers**	$6.42	260.00	$1,669.20
	SUBTOTALS PAGE 2			$1,295,264.60

DICKERSON

D&B

BOWEN

A HIGHWAY CONSTRUCTION COMPANY

May 22, 2018

Mr. Cris Bryson, P.E.
Ridgeland City Engineer
P.O. Box 217
Ridgeland, Ms., 39158

Re: East County Line Rehabilitation Project
Project ST-17-00

Dear Mr. Bryson

In accordance with Article 14-Payment to Contractor and Completion Paragraph 14.04 This is to notify you that the entire work is substantially complete and we are herein requesting final inspection.

You are further advised that there have been no changes in the original contract documents or submittals.

Sincerely
Dickerson & Bowen Inc.

Don W. Glenn
P.O. Box 22766
Jackson, Ms., 39225

POST OFFICE BOX 1008, BROOKHAVEN, MISSISSIPPI 39602-1008
TEL. 601.833.4291, FAX 601.833.8760

DICKERSON

D&B

BOWEN

A HIGHWAY CONSTRUCTION COMPANY

Re: East County Line Rehabilitation Project
Project ST-17-00

AFFIDAVIT

We hereby guarantee all materials used by us on the above referenced project to be free from defect for a period of time as may be called for in the contract documents for such portions of the work.

Dickerson & Bowen Inc.

By_____
Don L. Glenn, Contract Administrator

Date: May 22, 2018

Subscribed and Sworn to before me this
the 22nd day of May, 2018

_____
Notary Public

STATE OF MISSISSIPPI
NOTARY PUBLIC
ID # 114446
MARK A. HUGHES
Commission Expires
Nov 17, 2019
LINCOLN COUNTY

My Commission Expires November 17, 2019

POST OFFICE BOX 1008, BROOKHAVEN, MISSISSIPPI 39602-1008
TEL. 601.833.4291, FAX 601.833.8760

CONSENT OF SURETY TO FINAL PAYMENT

AIA Document G707

Bond No. 43BCSHU2532

OWNER ☐
ARCHITECT ☐
CONTRACTOR ☐
SURETY ☒
OTHER ☐

TO OWNER:
(Name and address)

City of Ridgeland
P. O. Box 217
Ridgeland, MS 39158

ARCHITECT'S PROJECT NO.:

CONTRACT FOR:

CONTRACT DATED: December 1, 2017

PROJECT:
(Name and address)

East County Line Road Rehabilitation

In accordance with the provisions of the Contract between the Owner and the Contractor as indicated above, the
(Insert name and address of Surety)

Hartford Accident and Indemnity Company
One Hartford Plaza
Hartford, CT 06155-0001

, SURETY,

on bond of
(Insert name and address of Contractor)

Dickerson and Bowen, Inc.
P. O. Box 1008
Brookhaven, MS 39602-1008

, CONTRACTOR,

hereby approves of the final payment to the Contractor, and agrees that final payment to the Contractor shall not relieve the Surety of any of its obligations to
(Insert name and address of Owner)

City of Ridgeland
P. O. Box 217
Ridgeland, MS 39158

, OWNER,

as set forth in said Surety's bond.

IN WITNESS WHEREOF, the Surety has hereunto set its hand on this date: May 22, 2018
(Insert in writing the month followed by the numeric date and year.)

Hartford Accident and Indemnity Company
(Surety)

By: Joshua T. Jones
(Signature of authorized representative)

Joshua T. Jones Attorney-in-Fact
(Printed name and title)

Attest: Gail Thomas
(Seal): Gail Thomas Witness to Surety

POWER OF ATTORNEY

Direct Inquiries/Claims to:
THE HARTFORD
BOND, T-12
One Hartford Plaza
Hartford, Connecticut 06155
Bond.Claims@thehartford.com
call: **888-266-3488** *or fax:* **860-757-5835**

KNOW ALL PERSONS BY THESE PRESENTS THAT:

Agency Name: REGIONS INSURANCE INC
Agency Code: 43-239502

- [X] **Hartford Fire Insurance Company**, a corporation duly organized under the laws of the State of Connecticut
- [X] **Hartford Casualty Insurance Company**, a corporation duly organized under the laws of the State of Indiana
- [X] **Hartford Accident and Indemnity Company**, a corporation duly organized under the laws of the State of Connecticut
- [ ] **Hartford Underwriters Insurance Company**, a corporation duly organized under the laws of the State of Connecticut
- [ ] **Twin City Fire Insurance Company**, a corporation duly organized under the laws of the State of Indiana
- [ ] **Hartford Insurance Company of Illinois**, a corporation duly organized under the laws of the State of Illinois
- [ ] **Hartford Insurance Company of the Midwest**, a corporation duly organized under the laws of the State of Indiana
- [ ] **Hartford Insurance Company of the Southeast,** a corporation duly organized under the laws of the State of Florida

having their home office in Hartford, Connecticut, (hereinafter collectively referred to as the "Companies") do hereby make, constitute and appoint, ***up to the amount of*** Unlimited :
Joshua T. Jones, Wesley H. McCubbins, Angela Marie Merritt, Charles F. Porter of RIDGELAND, Mississippi

their true and lawful Attorney(s)-in-Fact, each in their separate capacity if more than one is named above, to sign its name as surety(ies) only as delineated above by ☒, and to execute, seal and acknowledge any and all bonds, undertakings, contracts and other written instruments in the nature thereof, on behalf of the Companies in their business of guaranteeing the fidelity of persons, guaranteeing the performance of contracts and executing or guaranteeing bonds and undertakings required or permitted in any actions or proceedings allowed by law.

In Witness Whereof, and as authorized by a Resolution of the Board of Directors of the Companies on May 6, 2015 the Companies have caused these presents to be signed by its Senior Vice President and its corporate seals to be hereto affixed, duly attested by its Assistant Secretary. Further, pursuant to Resolution of the Board of Directors of the Companies, the Companies hereby unambiguously affirm that they are and will be bound by any mechanically applied signatures applied to this Power of Attorney.

John Gray, Assistant Secretary

M. Ross Fisher, Senior Vice President

STATE OF CONNECTICUT
COUNTY OF HARTFORD } ss. Hartford

On this 11th day of January, 2016, before me personally came M. Ross Fisher, to me known, who being by me duly sworn, did depose and say: that he resides in the County of Hartford, State of Connecticut; that he is the Senior Vice President of the Companies, the corporations described in and which executed the above instrument; that he knows the seals of the said corporations; that the seals affixed to the said instrument are such corporate seals; that they were so affixed by authority of the Boards of Directors of said corporations and that he signed his name thereto by like authority.

NORA M. STRANKO NOTARY PUBLIC CONNECTICUT

Nora M. Stranko
Notary Public
My Commission Expires March 31, 2018

CERTIFICATE

I, the undersigned, Assistant Vice President of the Companies, DO HEREBY CERTIFY that the above and foregoing is a true and correct copy of the Power of Attorney executed by said Companies, which is still in full force effective as of May 22, 2018
Signed and sealed at the City of Hartford.

Kevin Heckman, Assistant Vice President

the city of RIDGELAND

public works

MEMORANDUM

TO: Mayor Gene F. McGee and Board of Aldermen

FROM: Christopher W. Bryson, P.E., City Engineer

DATE: May 30, 2018

RE: **PRELIMINARY ENGINEERING ESTIMATE #55**
Lake Harbour Drive Extension
Highway 51 to Highland Colony Parkway
HPP-8323-00(004)/LPA 104859-811000

We respectfully request the Mayor and Board of Aldermen approve payment in the amount of **$17,580.85** to Waggoner Engineering, Inc. for work completed on the referenced project during the period between April 1, 2018 and April 30, 2018. MDOT will reimburse 80% of this payment in the amount of $14,064.68. Our local matching responsibility remaining for this period's work is $3,516.17, 20%. MDOT reimbursements for this Preliminary Engineering Contract have been paid through the Estimate No. 54 totaling $738,307.70.

Upon your approval, the Mayor will need to sign the cover CSU-001 form as our LPA Official. The executed Estimate No. 55 Package should be given to Public Works for submitting digitally to the MDOT LPA Invoice Division for reimbursement.

Thank you for your consideration of our request. Please contact me if you have any questions.

Cc: John M. McCollum, Public Works Director

mailing address: p.o. box 217 · ridgeland, ms 39158
street address: 304 highway 51 · ridgeland, ms 39157
ph: 601.853.2027 · fax: 601.853.2019 · www.ridgelandms.org

Gene F. McGee, cmo - mayor · John M. McCollum - director of public works

board of aldermen: D.I. Smith - at-large • Ken Heard, cmo, mayor pro tempore - ward 1 • Chuck Gautier - ward 2
Kevin Holder, cmo - ward 3 • Brian P. Ramsey, cmo - ward 4 • Bill Lee - ward 5 • Wesley Hamlin, cmo - ward 6

PRELIMINARY ENGINEERING CSU-001 For LPA's

MISSISSIPPI DEPARTMENT OF TRANSPORTATION
PRELIMINARY ENGINEERING ESTIMATE - RECAP SHEET

SA#4

P.O. No. 3941

Invoice Number : 34681

Sheet No. 1 of

Vendor Number **3100034217**

Project No. HPP-8323-00(004)LPA 104859 811000 County Madison

In Account With City of Ridgeland, P O Box 217, Ridgeland, MS 39158

Contract Number: **CS00003616**

Est. No. 55 (Progress Estimate / Final) Period April 1, 2018 THRU April 30, 2018

Document No.

	Line Item	OCA	User Code 1	Object	Project Number / Detail Code	User Code 2	Current Period	Previous Estimate	Total Allowed to Date
Total Participating Cost	001	037010	153	1612	104859 811000	1	$17,580.85	$922,884.63	$940,465.48
Total							$17,580.85	$922,884.63	$940,465.48
							$0.00	$0.00	$0.00
Total All Work Due							$17,580.85	$922,884.63	$940,465.48
Total Net Work Due							**$17,580.85**	**$922,884.63**	**$940,465.48**

Invoice Submitted
Original Signed
Waggoner Engineering — Hunter T. Arnold — Project Manager (Consultant)

LPA Official
City of Ridgeland

MDOT Consultant Admin
Consultant Services Director, Scot Ehrgott

Current Termination Date of Contract: 12/31/2018

(*** No Work is reimbursable after the termination date has been exceeded***)

Maximum Amount Allowed for Project (Total Net Work Due): 999,338.10

AMOUNT OF PAYMENT FOR ALL ESTIMATES SHOULD BE TO THE NEAREST CENTS ($0.00).

% Matching Funds Deduction for LPA **20.00000%**	001	037010	153	1612	104859 811000	1	($3,516.17)	($184,576.93)	($188,093.10)
TOTAL Net Amount Owed to the LPA							**$14,064.68**	**$738,307.70**	**$752,372.38**

Revised: 1/15/2009

STATEMENT OF LOCAL PUBLIC AGENCY PROGRESS AND FINAL ESTIMATES FOR CONSTRUCTION

CAD-001 and CAD-002

State of Mississippi
County: Madison
Local Public Agency (LPA): City of Ridgeland
Project Number: HPP-8323-00(004)LPA 104859 811000
Project Description:

Lake Harbour Drive Extension between US Highway 51 and Highland Colony Parkway

Project Engineer/Architect's Name: Hunter Arnold, P. E.

I, Hunter Arnold, P. E., hereby verify for the attached estimate on the above listed project that:

a. All computations have been checked and are correct.

b. The final total amount allowed to the contractor is accurate and proper.

c. The last payment to the contractor is the difference between the amount previously paid the contractor and the total amount owed to the contractor.

d. All quantities listed are accurate and proper.

e. I understand that payment to the contractor will be based exclusively on my signature on the CAD-001 for which I bear full responsibility.

HUNTER THOMAS ARNOLD
REGISTERED PROFESSIONAL ENGINEER 11076
STATE OF MISSISSIPPI

Professional stamp/seal

Hunter T. Arnold
Project Engineer/Architect (signature)

Sworn to and subscribed before me this 29th day of May, 2018.

STATE OF MISSISSIPPI
NOTARY PUBLIC
ID # 116972
DEBORAH HORN
Commission Expires
July 10, 2020
RANKIN COUNTY

Notary stamp/seal

My Commission Expires:

Deborah Horn
Notary (signature)

WAGGONER Engineering, Inc.

P.O. Box 12227
Jackson, MS 39236-2227

601-355-9526 Voice
601-352-3945 Fax

City of Ridgeland
Attn: David Overby
P. O. Box 217
Ridgeland, MS 39158

May 8, 2018
Project No: T012094.002
Invoice No: 34681

LAKE HARBOUR DRIVE EXTENSION
Professional services in accordance with contract Supplemental Agreement No: 4 dated February 21, 2018 as relates to Project No. HPP-8323-00(004) in Madison County, Mississippi.
Professional Services from April 1, 2018 to April 30, 2018

Phase 000001 Supplemental Agreement #4

Professional Personnel

	Hours	Rate	Amount	
DISCIPLINE MANAGER				
Edwards, Chadwick	44.00	49.56	2,180.64	
PROJECT MANAGER				
Pentecost, Ben	7.75	45.87	355.49	
SR PROJECT ENGINEER				
Williams, David	54.25	48.59	2,636.01	
DESIGNER				
Robinson, Glenn	8.00	29.81	238.48	
CONSTRUCTION REP II				
McMahen, Steve	4.50	44.24	199.08	
Totals	118.50		5,609.70	
Total Labor		**2.9251 times**	**5,609.70**	**16,408.93**

Reimbursable Expenses

Postage/Shipping		33.66	
Total Reimbursables		**33.66**	**33.66**

Unit Billing

B/W COPIES	68.0 Copies @ 0.15	10.20	
B/W PLOTTER COPIES	87.091 SQ FT @ 0.25	21.77	
Total Units		**31.97**	**31.97**
	Total this Task		**$16,474.56**

Fee

Billing Phase	Fee	Percent Complete	Earned	
75% Fixed Fee	6,252.21	50.16	3,136.11	
25% Fixed Fee	2,084.07	0.00	0.00	
Total Fee	8,336.28		3,136.11	
	Previous Fee Billing		2,047.60	
	Current Fee Billing		1,088.51	
	Total Fee			**1,088.51**
		Total this Task		**$1,088.51**

Fee

Billing Phase	Fee	Percent Complete	Earned	
0.43% FCCM Overhead	102.12	50.16	51.22	
Total Fee	102.12		51.22	
	Previous Fee Billing		33.44	
	Current Fee Billing		17.78	
	Total Fee			**17.78**
			Total this Task	**$17.78**

Billing Limits	Current	Prior	To-Date	
Total Billings	17,580.85	30,679.89	48,260.74	
Limit			88,557.93	
Remaining			40,297.19	
			Total this Phase	**$17,580.85**
			Total this Invoice	**$17,580.85**

Billings to Date

	Current	Prior	Total
Fee	1,106.29	2,081.04	3,187.33
Labor	16,408.93	28,598.85	45,007.78
Expense	33.66	0.00	33.66
Unit	31.97	0.00	31.97
Totals	**17,580.85**	**30,679.89**	**48,260.74**

Billing Backup

Tuesday, May 15, 2018

Waggoner Engineering, Inc. Invoice 34681 Dated 5/8/2018 4:25:29 PM

Phase 000001 Supplemental Agreement #4

Professional Personnel

		Hours	Rate	Amount	
DISCIPLINE MANAGER					
513 - Edwards, Chadwick	4/2/2018	4.00	49.56	198.24	
513 - Edwards, Chadwick	4/2/2018	1.00	49.56	49.56	
513 - Edwards, Chadwick	4/3/2018	3.00	49.56	148.68	
513 - Edwards, Chadwick	4/4/2018	1.00	49.56	49.56	
513 - Edwards, Chadwick	4/4/2018	.50	49.56	24.78	
513 - Edwards, Chadwick	4/6/2018	3.00	49.56	148.68	
513 - Edwards, Chadwick	4/11/2018	4.50	49.56	223.02	
513 - Edwards, Chadwick	4/12/2018	4.00	49.56	198.24	
513 - Edwards, Chadwick	4/18/2018	6.00	49.56	297.36	
513 - Edwards, Chadwick	4/19/2018	6.00	49.56	297.36	
513 - Edwards, Chadwick	4/20/2018	3.00	49.56	148.68	
513 - Edwards, Chadwick	4/23/2018	2.00	49.56	99.12	
513 - Edwards, Chadwick	4/24/2018	2.00	49.56	99.12	
513 - Edwards, Chadwick	4/26/2018	1.00	49.56	49.56	
513 - Edwards, Chadwick	4/30/2018	3.00	49.56	148.68	
PROJECT MANAGER					
526 - Pentecost, Ben	4/2/2018	.75	45.87	34.40	
526 - Pentecost, Ben	4/4/2018	.50	45.87	22.94	
526 - Pentecost, Ben	4/17/2018	2.00	45.87	91.73	
526 - Pentecost, Ben	4/23/2018	2.00	45.87	91.74	
526 - Pentecost, Ben	4/24/2018	1.00	45.87	45.87	
526 - Pentecost, Ben	4/25/2018	1.00	45.87	45.87	
526 - Pentecost, Ben	4/27/2018	.50	45.87	22.94	
SR PROJECT ENGINEER					
531 - Williams, David	4/3/2018	4.00	48.59	194.36	
531 - Williams, David	4/5/2018	4.00	48.59	194.37	
531 - Williams, David	4/6/2018	1.00	48.59	48.59	
531 - Williams, David	4/9/2018	5.50	48.59	267.25	
531 - Williams, David	4/11/2018	6.00	48.59	291.54	
531 - Williams, David	4/12/2018	4.75	48.59	230.80	
531 - Williams, David	4/12/2018	2.00	48.59	97.18	
531 - Williams, David	4/13/2018	5.75	48.59	279.39	
531 - Williams, David	4/17/2018	5.00	48.59	242.95	
531 - Williams, David	4/18/2018	4.75	48.59	230.80	
531 - Williams, David	4/19/2018	3.75	48.59	182.21	
531 - Williams, David	4/20/2018	5.75	48.59	279.39	
531 - Williams, David	4/30/2018	2.00	48.59	97.18	
DESIGNER					
562 - Robinson, Glenn	4/12/2018	8.00	29.81	238.48	
CONSTRUCTION REP II					
577 - McMahen, Steve	4/23/2018	1.50	44.24	66.36	
577 - McMahen, Steve	4/24/2018	3.00	44.24	132.72	
Totals		118.50		5,609.70	
Total Labor			**2.9251 times**	**5,609.70**	**16,408.93**

Reimbursable Expenses				
Postage/Shipping				
AP 33074	4/30/2018	Federal Express / Shipment to Dana Cleveland / Invoice: 6-154-97932, 4/18/2018	33.66	
	Total Reimbursables		**33.66**	**33.66**
Unit Billing				
B/W COPIES		68.0 Copies @ 0.15	10.20	
B/W PLOTTER COPIES		87.091 SQ FT @ 0.25	21.77	
	Total Units		**31.97**	**31.97**
		Total this Task		**$16,474.56**
Fee				**1,088.51**
		Total this Task		**$1,088.51**
Fee				**17.78**
		Total this Task		**$17.78**
		Total this Phase		**$17,580.85**
		Total this Project		**$17,580.85**
		Total this Report		**$17,580.85**

the city of RIDGELAND

public works

MEMORANDUM

TO: Mayor Gene F. McGee and Board of Aldermen

FROM: Christopher W. Bryson, P.E., City Engineer

DATE: May 30, 2018

RE: **CE&I ESTIMATE NO. 3**
Waggoner Engineering, Inc. - Pay Period Ending April 30, 2018
East Lake Harbour Drive Rehabilitation, Northpark Drive to Breakers Lane
Federal Aid Project No. STP-6945-00(009) LPA/107557-701000
City of Ridgeland, Madison County, Mississippi

We respectfully request the Mayor and Board of Aldermen approve payment in the amount of **$36,378.63** to Waggoner Engineering, Inc. for work completed on the referenced project during the period between April 1, 2018 and April 30, 2018. MDOT will reimburse 80% of this payment in the amount of $29,102.90. Our local matching responsibility remaining for this period's work is $7,275.73, 20%. MDOT reimbursements for this CE&I Contract have been paid through the Estimate No. 2 totaling $30,324.37.

Upon your approval, the Mayor will need to sign the cover LPA-CSU-001 form as our LPA Official. The executed CE&I Estimate No. 3 Package should be given to Public Works for submitting digitally to the MDOT LPA Invoice Division for reimbursement.

Thank you for your consideration of our request. Please contact me if you have any questions.

Cc: John M. McCollum, Public Works Director

mailing address: p.o. box 217 · ridgeland, ms 39158
street address: 304 highway 51 · ridgeland, ms 39157
ph: 601.853.2027 · fax: 601.853.2019 · www.ridgelandms.org

Gene F. McGee, cmo - mayor · John M. McCollum - director of public works

board of aldermen: D.I. Smith - at-large • Ken Heard, cmo, mayor pro tempore - ward 1 • Chuck Gautier - ward 2
Kevin Holder, cmo - ward 3 • Brian P. Ramsey, cmo - ward 4 • Bill Lee - ward 5 • Wesley Hamlin, cmo - ward 6

LPA-CSU-001 For LPA's

REV 4/01/2016

MISSISSIPPI DEPARTMENT OF TRANSPORTATION
MDOT REIMBURSEMENT ESTIMATE - RECAP SHEET

Date Processed May 18, 2018
Vendor Number **3100034217 0**
Project No. 107557-701000
In Account With City of Ridgeland
Contract Number: **CS 00004480**
Est. No. 3 Progress

MDOT Project Number **STP-6945-00(009)LPA**
County **Madison**
Address P.O. Box 217, Ridgeland, MS 39158
Surety
Period April 1, 2018 THRU April 30, 2018

P.O. No. 3941
Invoice Number : 34673
Sheet No. 1
Document No.

	Line Item	OCA	User Code 1	Object	Project Number / Detail Code	User Code 2	Current Period	Previous Estimate	Total Allowed to Date
Total Participating Cost	000001	080120	153	1612	107557-701000	1	36,378.63	37,905.47	74,284.10
Total							36,378.63	37,905.47	74,284.10
Total All Work Due							36,378.63	37,905.47	74,284.10
Total Net Work Due							**36,378.63**	**37,905.47**	**74,284.10**

Quantities Checked
Original Signed
Waggoner Engineering, Inc. Project Engineer

LPA Official
City of Ridgeland

Approved By:
Consultant Services Unit Engineer - Scot Ehrgott, P.E.

Contract Not To Exceed Amount
$119,017.41

NTP Date
December 18, 2017

Termination Date
TBD

AMOUNT OF PAYMENT FOR PROGRESS ESTIMATES AND FINAL ESTIMATES SHOULD BE ROUNDED TO THE NEAREST CENTS ($0.00)

% Matching Funds Deduction for LPA	**20.00000%**	001	080120	153	1612	107557-701000	1	(7,275.73)	(7,581.09)	(14,856.82)
						TOTAL Net Amount Owed to the LPA		**29,102.90**	**30,324.38**	**59,427.28**

THE SOLE PURPOSE OF THE ENGINEER'S SIGNATURE IS TO ACKNOWLEDGE THAT THE LPA HAS SUBMITTED ALL REQUIRED DATA BY THE LPA MANUAL FOR PAYMENT

Revised: 1/15/2009

STATEMENT OF LOCAL PUBLIC AGENCY PROGRESS AND FINAL ESTIMATES FOR CONSTRUCTION

CAD-001 and CAD-002

State of Mississippi
County: MADISON COUNTY
Local Public Agency (LPA): CITY OF RIDGELAND
Project Number: 107557-701000
Project Description:

Construction Engineering & Inspection East Lake Harbour Drive Rehabilitation/Northpark Drive to Breakers Lane Federal Aid Project No. STP-6945-00(009) LPA/107557-701000, City of Ridgeland, Madison County, MS

Project Engineer/Architect's Name: Will Pentecost, PE

I, Will Pentecost, PE, hereby verify for the attached estimate on the above listed project that:

a. All computations have been checked and are correct.

b. The final total amount allowed to the contractor is accurate and proper.

c. The last payment to the contractor is the difference between the amount previously paid the contractor and the total amount owed to the contractor.

d. All quantities listed are accurate and proper.

e. I understand that payment to the contractor will be based exclusively on my signature on the CAD-001 for which I bear full responsibility.

BEN WILLS PENTECOST, JR. LICENSED PROFESSIONAL ENGINEER 21268 STATE OF MISSISSIPPI

Professional stamp/seal

Will Pentecost
Project Engineer/Architect (signature)

Sworn to and subscribed before me this 25th day of May, 2018.

STATE OF MISSISSIPPI NOTARY PUBLIC ID # 116972 DEBORAH HORN Commission Expires July 10, 2020 RANKIN COUNTY

Notary stamp/seal

My Commission Expires: _____

Deborah Horn
Notary (signature)

WAGGONER
Engineering, Inc.

P.O. Box 12227
Jackson, MS 39236-2227

601-355-9526 Voice
601-352-3945 Fax

City of Ridgeland
Attn: David Overby
P. O. Box 217
Ridgeland, MS 39158

May 8, 2018
Project No: 0018008.000
Invoice No: 34673

CONSTRUCTION ENGINEERING & INSPECTION (CE&I)
East Lake Harbour Drive Rehabilitation / Northpark Drive to Breakers Lane
Federal Aid Project No. STP-6945-00(009) LPA/107557-701000
City of Ridgeland, Madison County, Mississippi

Professional Services from April 1, 2018 to April 30, 2018

Professional Personnel

	Hours	Rate	Amount	
PROJECT MANAGER				
Pentecost, Ben	4.00	150.28	601.12	
ASST PROJECT ENGINEER				
Edwards, Chadwick	12.00	153.87	1,846.44	
SR PROJECT ENGINEER				
McMahen, Steve	38.50	147.13	5,664.51	
SR PROJECT ENGINEER				
Wolfe, Martin	21.50	171.90	3,695.85	
ADMINISTRATIVE II				
Garner, Rhonda	44.00	81.65	3,592.60	
CONSTRUCTION REP II				
Case, Walter	116.50	125.50	14,620.75	
McInnis, Jamie	56.25	125.50	7,059.38	
Totals	292.75		37,080.65	
Total Labor				**37,080.65**
Consultants				
Burns Cooley Dennis, Inc.			710.40	
Total Consultants			**710.40**	**710.40**
Reimbursable Expenses				
Travel Expense			478.37	
Total Reimbursables			**478.37**	**478.37**
Unit Billing				
B/W COPIES	14.0 Copies @ 0.15		2.10	
B/W PLOTTER COPIES	87.091 SQ FT @ 0.25		21.77	
Total Units			**23.87**	**23.87**
Retainage				
Current Retainage	1,914.66 (5.00 % of 38,293.29)			**-1,914.66**
Prior Retainage	1,995.03			
Retainage-To-Date	3,909.69			

Project	0018008.000	East Lake Harbour Drive Rehabilital	Invoice	34673

Billing Limits	**Current**	**Prior**	**To-Date**
Total Billings	38,293.29	39,900.50	78,193.79
Limit			119,017.41
Remaining			40,823.62

Total this Invoice **$36,378.63**

Outstanding Invoices

Number	**Date**	**Balance**	**Retainage**	**Now Due**
34555	3/14/2018	128.33	-128.33	0.00
34617	4/11/2018	1,866.70	-1,866.70	0.00
Total		**1,995.03**	**-1,995.03**	**0.00**

Total Now Due **$36,378.63**

Billing Backup

Monday, May 14, 2018

Waggoner Engineering, Inc. Invoice 34673 Dated 5/8/2018 1:54:28 PM

Professional Personnel

		Hours	Rate	Amount
PROJECT MANAGER				
526 - Pentecost, Ben	4/10/2018	1.00	150.28	150.28
526 - Pentecost, Ben	4/11/2018	.50	150.28	75.14
526 - Pentecost, Ben	4/17/2018	1.00	150.28	150.28
526 - Pentecost, Ben	4/18/2018	.50	150.28	75.14
526 - Pentecost, Ben	4/23/2018	1.00	150.28	150.28
ASST PROJECT ENGINEER				
513 - Edwards, Chadwick	4/3/2018	1.00	153.87	153.87
513 - Edwards, Chadwick	4/4/2018	1.00	153.87	153.87
513 - Edwards, Chadwick	4/12/2018	2.00	153.87	307.74
513 - Edwards, Chadwick	4/13/2018	1.00	153.87	153.87
513 - Edwards, Chadwick	4/16/2018	2.00	153.87	307.74
513 - Edwards, Chadwick	4/18/2018	1.00	153.87	153.87
513 - Edwards, Chadwick	4/20/2018	2.00	153.87	307.74
513 - Edwards, Chadwick	4/23/2018	2.00	153.87	307.74
SR PROJECT ENGINEER				
577 - McMahen, Steve	4/2/2018	4.00	147.13	588.52
577 - McMahen, Steve	4/3/2018	6.00	147.13	882.78
577 - McMahen, Steve	4/4/2018	1.50	147.13	220.70
577 - McMahen, Steve	4/5/2018	2.00	147.13	294.26
577 - McMahen, Steve	4/6/2018	1.50	147.13	220.70
577 - McMahen, Steve	4/13/2018	2.50	147.13	367.83
577 - McMahen, Steve	4/16/2018	1.00	147.13	147.11
577 - McMahen, Steve	4/17/2018	6.00	147.13	882.78
577 - McMahen, Steve	4/18/2018	2.00	147.13	294.26
577 - McMahen, Steve	4/19/2018	1.00	147.13	147.13
577 - McMahen, Steve	4/20/2018	4.00	147.13	588.52
577 - McMahen, Steve	4/23/2018	2.50	147.13	367.83
577 - McMahen, Steve	4/25/2018	3.00	147.13	441.39
577 - McMahen, Steve	4/26/2018	1.00	147.13	147.13
577 - McMahen, Steve	4/27/2018	.50	147.13	73.57
SR PROJECT ENGINEER				
525 - Wolfe, Martin	4/2/2018	1.00	171.90	171.90
525 - Wolfe, Martin	4/3/2018	.50	171.90	85.95
525 - Wolfe, Martin	4/4/2018	.50	171.90	85.95
525 - Wolfe, Martin	4/9/2018	1.50	171.90	257.85
525 - Wolfe, Martin	4/10/2018	2.00	171.90	343.80
525 - Wolfe, Martin	4/11/2018	1.00	171.90	171.90
525 - Wolfe, Martin	4/12/2018	1.00	171.90	171.90
525 - Wolfe, Martin	4/13/2018	1.00	171.90	171.90
525 - Wolfe, Martin	4/16/2018	3.00	171.90	515.70
525 - Wolfe, Martin	4/17/2018	1.50	171.90	257.85
525 - Wolfe, Martin	4/18/2018	1.00	171.90	171.90
525 - Wolfe, Martin	4/20/2018	2.50	171.90	429.75
525 - Wolfe, Martin	4/23/2018	1.50	171.90	257.85
525 - Wolfe, Martin	4/25/2018	2.00	171.90	343.80
525 - Wolfe, Martin	4/27/2018	.50	171.90	85.95
525 - Wolfe, Martin	4/30/2018	1.00	171.90	171.90
ADMINISTRATIVE II				
572 - Garner, Rhonda	4/2/2018	6.00	81.65	489.90

572 - Garner, Rhonda	4/3/2018	4.00	81.65	326.60	
572 - Garner, Rhonda	4/4/2018	1.00	81.65	81.65	
572 - Garner, Rhonda	4/9/2018	1.50	81.65	122.48	
572 - Garner, Rhonda	4/10/2018	2.50	81.65	204.13	
572 - Garner, Rhonda	4/11/2018	3.00	81.65	244.95	
572 - Garner, Rhonda	4/13/2018	3.00	81.65	244.95	
572 - Garner, Rhonda	4/17/2018	3.00	81.65	244.94	
572 - Garner, Rhonda	4/18/2018	4.00	81.65	326.60	
572 - Garner, Rhonda	4/19/2018	3.00	81.65	244.95	
572 - Garner, Rhonda	4/20/2018	3.00	81.65	244.95	
572 - Garner, Rhonda	4/25/2018	2.00	81.65	163.30	
572 - Garner, Rhonda	4/27/2018	5.00	81.65	408.25	
572 - Garner, Rhonda	4/30/2018	3.00	81.65	244.95	
CONSTRUCTION REP II					
577 - Case, Walter	4/2/2018	2.00	125.50	251.00	
577 - Case, Walter	4/4/2018	10.00	125.50	1,255.00	
577 - Case, Walter	4/5/2018	5.00	125.50	627.50	
577 - Case, Walter	4/6/2018	7.00	125.50	878.50	
577 - Case, Walter	4/9/2018	7.00	125.50	878.50	
577 - Case, Walter	4/10/2018	8.00	125.50	1,004.00	
577 - Case, Walter	4/11/2018	8.00	125.50	1,004.00	
577 - Case, Walter	4/12/2018	6.00	125.50	753.00	
577 - Case, Walter	4/13/2018	10.00	125.50	1,255.00	
577 - Case, Walter	4/16/2018	3.00	125.50	376.50	
577 - Case, Walter	4/17/2018	3.00	125.50	376.50	
577 - Case, Walter	4/18/2018	5.00	125.50	627.50	
577 - Case, Walter	4/19/2018	8.00	125.50	1,004.00	
577 - Case, Walter	4/20/2018	7.50	125.50	941.25	
577 - Case, Walter	4/23/2018	7.00	125.50	878.50	
577 - Case, Walter	4/24/2018	8.00	125.50	1,004.00	
577 - Case, Walter	4/25/2018	6.00	125.50	753.00	
577 - Case, Walter	4/26/2018	4.00	125.50	502.00	
577 - Case, Walter	4/30/2018	2.00	125.50	251.00	
527 - McInnis, Jamie	4/2/2018	10.00	125.50	1,255.00	
527 - McInnis, Jamie	4/3/2018	11.00	125.50	1,380.50	
527 - McInnis, Jamie	4/4/2018	2.50	125.50	313.75	
527 - McInnis, Jamie	4/5/2018	7.00	125.50	878.50	
527 - McInnis, Jamie	4/6/2018	2.00	125.50	251.00	
527 - McInnis, Jamie	4/11/2018	3.25	125.50	407.88	
527 - McInnis, Jamie	4/12/2018	2.00	125.50	251.00	
527 - McInnis, Jamie	4/16/2018	9.00	125.50	1,129.50	
527 - McInnis, Jamie	4/17/2018	2.50	125.50	313.75	
527 - McInnis, Jamie	4/18/2018	3.50	125.50	439.25	
527 - McInnis, Jamie	4/20/2018	1.50	125.50	188.25	
527 - McInnis, Jamie	4/25/2018	1.00	125.50	125.50	
527 - McInnis, Jamie	4/27/2018	1.00	125.50	125.50	
Totals		292.75		37,080.65	
Total Labor					**37,080.65**

Consultants

Burns Cooley Dennis, Inc.

AP 33015	4/12/2018	Burns Cooley Dennis, Inc. / Testing / Invoice: 33708, 3/31/2018	710.40	
	Total Consultants		**710.40**	**710.40**

Reimbursable Expenses

Project	0018008.000	East Lake Harbour Drive Rehabilital	Invoice	34673
Travel Expense				
EX 0010301	4/2/2018	Case, Walter / Mileage / Construction review. / 21.00 miles @ 0.545	11.45	
EX 0010312	4/2/2018	McInnis, Jamie / Construction Inspection Services / 26.00 miles @ 0.545	14.17	
EX 0010295	4/2/2018	McMahen, Steve / To ELH / Inspection on ELH / 10.00 miles @ 0.545	5.45	
EX 0010295	4/3/2018	McMahen, Steve / Two Trips to ELH / Two trips to ELH for inspection / 30.00 miles @ 0.545	16.35	
EX 0010312	4/3/2018	McInnis, Jamie / Construction Inspection Services / 26.00 miles @ 0.545	14.17	
EX 0010301	4/3/2018	Case, Walter / Mileage / 21.00 miles @ 0.545	11.45	
EX 0010301	4/4/2018	Case, Walter / Mileage / 21.00 miles @ 0.545	11.45	
EX 0010301	4/5/2018	Case, Walter / Mileage / 21.00 miles @ 0.545	11.45	
EX 0010312	4/5/2018	McInnis, Jamie / Construction Inspection Services / 38.00 miles @ 0.545	20.71	
EX 0010295	4/5/2018	McMahen, Steve / To ELH / Two trips on Inspection on ELH / 20.00 miles @ 0.545	10.90	
EX 0010295	4/6/2018	McMahen, Steve / To ELH / Inspection on ELH / 10.00 miles @ 0.545	5.45	
EX 0010301	4/6/2018	Case, Walter / Mileage / 21.00 miles @ 0.545	11.45	
EX 0010301	4/9/2018	Case, Walter / Mileage / 21.00 miles @ 0.545	11.45	
EX 0010301	4/10/2018	Case, Walter / Mileage / 21.00 miles @ 0.545	11.45	
EX 0010301	4/11/2018	Case, Walter / Mileage / 21.00 miles @ 0.545	11.45	
EX 0010301	4/12/2018	Case, Walter / Mileage / 21.00 miles @ 0.545	11.45	
EX 0010312	4/12/2018	McInnis, Jamie / Construction Inspection / 22.00 miles @ 0.545	11.99	
EX 0010301	4/13/2018	Case, Walter / Mileage / 21.00 miles @ 0.545	11.45	
EX 0010295	4/13/2018	McMahen, Steve / To ELH / Inspection on ELH / 10.00 miles @ 0.545	5.45	
EX 0010353	4/16/2018	Wolfe, Martin / site visit / site visit and investigation on rumble strips / 29.00 miles @ 0.545	15.81	
EX 0010330	4/16/2018	Edwards, Chadwick / site visit / 13.00 miles @ 0.545	7.09	
EX 0010338	4/16/2018	Case, Walter / Mileage / Construction review. / 21.00 miles @ 0.545	11.45	
EX 0010312	4/16/2018	McInnis, Jamie / Construction Inspection operations / 26.00 miles @ 0.545	14.17	
EX 0010329	4/17/2018	McMahen, Steve / Two trips to ELH / Inspection on ELH / 15.00 miles @ 0.545	8.18	
EX 0010338	4/17/2018	Case, Walter / Mileage / 21.00 miles @ 0.545	11.45	
EX 0010338	4/18/2018	Case, Walter / Mileage / 21.00 miles @ 0.545	11.45	
EX 0010353	4/18/2018	Wolfe, Martin / site visit to ELH / for site visit on East Lake Harbor / 20.00 miles @ 0.545	10.90	
EX 0010329	4/18/2018	McMahen, Steve / Two trips to ELH / Inspection on ELH / 12.00 miles @ 0.545	6.54	
EX 0010359	4/18/2018	McInnis, Jamie / Construction operations inspection / 13.00 miles @ 0.545	7.09	

Project	0018008.000	East Lake Harbour Drive Rehabilital	Invoice	34673
EX 0010338	4/19/2018	Case, Walter / Mileage / 21.00 miles @ 0.545	11.45	
EX 0010338	4/20/2018	Case, Walter / Mileage / 21.00 miles @ 0.545	11.45	
EX 0010353	4/20/2018	Wolfe, Martin / site visit to ELH / site visit on rumble strips / 24.00 miles @ 0.545	13.08	
EX 0010329	4/20/2018	McMahen, Steve / Three trips to ELH / Inspection on rumble strips / 30.00 miles @ 0.545	16.35	
EX 0010359	4/20/2018	McInnis, Jamie / Construction operations inspection / 13.00 miles @ 0.545	7.09	
EX 0010329	4/23/2018	McMahen, Steve / Trip to ELH / Inspection on ELH / 10.00 miles @ 0.545	5.45	
EX 0010338	4/23/2018	Case, Walter / Mileage / 21.00 miles @ 0.545	11.45	
EX 0010338	4/24/2018	Case, Walter / Mileage / 21.00 miles @ 0.545	11.45	
EX 0010338	4/25/2018	Case, Walter / Mileage / 21.00 miles @ 0.545	11.45	
EX 0010353	4/25/2018	Wolfe, Martin / deliver SA 1 / to ridgeland to deliver SA 1 / 8.00 miles @ 0.545	4.36	
EX 0010329	4/25/2018	McMahen, Steve / Two Trips to ELH / Inspection on ELH / 15.00 miles @ 0.545	8.18	
EX 0010359	4/25/2018	McInnis, Jamie / Delivered signed SA to Contractor / 16.50 miles @ 0.545	8.99	
EX 0010338	4/26/2018	Case, Walter / Mileage / 21.00 miles @ 0.545	11.45	
EX 0010338	4/27/2018	Case, Walter / Mileage / 21.00 miles @ 0.545	11.45	
EX 0010338	4/30/2018	Case, Walter / Mileage / 21.00 miles @ 0.545	11.45	
	Total Reimbursables		**478.37**	**478.37**
Unit Billing				
B/W COPIES		14.0 Copies @ 0.15	2.10	
B/W PLOTTER COPIES		87.091 SQ FT @ 0.25	21.77	
	Total Units		**23.87**	**23.87**
		Total this Project		**$38,293.29**
		Total this Report		**$38,293.29**

BURNS COOLEY DENNIS, INC.

GEOTECHNICAL AND MATERIALS ENGINEERING CONSULTANTS

Corporate Office
551 Sunnybrook Road
Ridgeland, MS 39157
Phone: (601) 856-9911
Fax: (601) 853-2077

Mailing Address
Post Office Box 12828
Jackson, MS 39236

www.bcdgeo.com

Materials Laboratory
278 Commerce Park Drive
Ridgeland, MS 39157
Phone: (601) 856-2332
Fax: (601) 856-3552

March 31, 2018
Project No: 000170282.010
Invoice No: 33708

Waggoner Engineering
Attn: Chad Edwards
PO Box 12227
Jackson, MS 39236

Project 000170282.010 East Lake Harbour Drive Rehabilitation STP-6945-00(009) LPA/107557-701000

Construction Materials Testing

Professional Services from February 25, 2018 to March 31, 2018

Fee

Total Fee	11,495.76			
		Total Earned	710.40	
		Previous Fee Billing	0.00	
		Current Fee Billing	710.40	
		Total Fee		**710.40**
			Total this Invoice	**$710.40**

ESTIMATED MAXIMUM FEE FOR TESTING SERVICES
East Lake Harbour Drive Rehabilitation
MDOT Project No.: STP-6945-00(009) / LPA 107557-701000
Burns Cooley Dennis

MDOT District Material Engineer Approval Date for the S&T Report

Overhead Rate	171.030%
Profit	12.000%

Classification	Raw Wage Rate	Audited OH Rate	Profit	Regular Billing Rate
Project Manager	$ 80.00	$ 136.82	$ 26.02	**$ 242.84**
Project Engineer	$ 65.00	$ 111.17	$ 21.14	**$ 197.31**
Engineer	$ 45.00	$ 76.96	$ 14.64	**$ 136.60**
Technician	$ 25.00	$ 42.76	$ 8.13	**$ 75.89**
Clerical	$ 20.00	$ 34.21	$ 6.50	**$ 60.71**

LABOR COSTS	Hours	Regular Billing Rate	Total
Project Manager	1	$ 242.84	$ 242.84
Engineer	0.5	$ 136.60	$ 68.30
Technician	4	$ 75.89	$ 303.55
Clerical	0.5	$ 60.71	$ 30.36
SUBTOTAL - LABOR COSTS	6		$ 645.05

FIELD AND LABORATORY	Quantity	Unit	Unit Cost	Total Cost
Coring		Each	$ 50.00	$ -
Bulk Specific Gravity **(T166)**	2	Each	$ 30.00	$ 60.00
SUB-TOTAL - FIELD AND LABORATORY				$ 60.00

EXPENSE ITEMS	Quantity	Unit	Rate	Total Cost
Travel - mileage	10	Each	$ 0.535	$ 5.35
SUB-TOTAL - EXPENSE ITEMS				$ 5.35

TOTAL PROPOSED FEE $ 710.40

the city of RIDGELAND

public works

MEMORANDUM

TO: Mayor Gene F. McGee and Board of Aldermen

FROM: Christopher W. Bryson, P.E., City Engineer

DATE: May 30, 2018

RE: **EASEMENT & CONSTRUCTION AGREEMENT AMENDMENT NO. 1**
I-55 from Old Agency Road to SR 463 with Highland Colony Connection Ph. II
ACNH-9204-00(007) / 100486-301000
City of Ridgeland, Madison County

We respectfully request the Mayor and Board of Aldermen approve this Amendment No. 1 to the Easement and Construction Agreement between the MISSISSIPPI TRANSPORTATION COMMISSION (the "Commission") and the CITY OF RIDGELAND executed on June 25, 2013 for the subject project also referred to as the I-55 Split Diamond Interchange project. This amendment incorporates a portion of right-of-way along Sunnybrook Road into the list of parcels that will be deed transferred to the City of Ridgeland by the Commission. This section of right-of-way was acquired by the Commission for the construction of the project, but was not included in the original agreement as one of the parcels to be conveyed to the City of Ridgeland following project completion.

Upon approval, both copies of the Amendment No. 1 must be fully executed by the Mayor, and attested by the City Clerk. The executed amendments should be submitted to Mr. Brian Ratliff, MDOT District 5 Engineer, along with two (2) copies of the Board Minutes showing City of Ridgeland approval. MDOT will furnish an original executed set following execution by the Mississippi Transportation Commission.

Thank you for your consideration of our request. Please contact me if you have any questions.

Cc: John M. McCollum, Public Works Director

mailing address: p.o. box 217 · ridgeland, ms 39158
street address: 304 highway 51 · ridgeland, ms 39157
ph: 601.853.2027 · fax: 601.853.2019 · www.ridgelandms.org

Gene F. McGee, cmo - mayor · John M. McCollum - director of public works

board of aldermen: D.I. Smith - at-large • Ken Heard, cmo, mayor pro tempore - ward 1 • Chuck Gautier - ward 2
Kevin Holder, cmo - ward 3 • Brian P. Ramsey, cmo - ward 4 • Bill Lee - ward 5 • Wesley Hamlin, cmo - ward 6

Dick Hall
Central District Commissioner
Brian D. Ratliff
District 5 Engineer

P. O. Box 90
Newton, MS 39345-0090
Telephone (601) 683-3341
FAX (601) 683-7030

MDOT
MISSISSIPPI DEPARTMENT OF TRANSPORTATION

Melinda L. McGrath
Executive Director

James A. Williams, III
Deputy Executive Director/Chief Engineer

Lisa M. Hancock
Deputy Executive Director/Administration

GoMDOT.com

May 4, 2018

MAYOR'S OFFICE
RECEIVED
MAY 07 2018
CITY OF RIDGELAND

Mayor Gene McGee
City of Ridgeland
P. O. Box 217
Ridgeland, Mississippi 39158

RE: Easement & Construction Agreement
Amendment No. 1
Project NO. ACNH-9204-00(007) / 100486
City of Ridgeland in Madison County

Dear Mayor McGee:

Attached you will find two (2) originals of Amendment #1 to the Easement & Construction Agreement executed on June 25, 2013, between MDOT and the City of Ridgeland on the captioned project. A portion of right of way acquired by the Commission for the construction of the project was not included in the Easement and Construction Agreement in the section that provides for the transfer of certain parcels of property to the City from the Commission (Section 5 of the Commission's Agreement found on pages 3 and 4).

If this Amendment meets with the City's approval, please execute both originals and return to this office for processing.

If you have any questions, please feel free to contact this office.

Sincerely,

Brian D. Ratliff

BRIAN RATLIFF, P.E.
DISTRICT ENGINEER

BDR:vv
Attachments
pc: File (via Patterson, Cleveland, Nail)

AMENDMENT NO. 1
EASEMENT AND CONSTRUCTION AGREEMENT
BETWEEN THE MISSISSIPPI TRANSPORTATION COMMISSION
AND THE CITY OF RIDGELAND

THIS AMENDMENT, to the Easement and Construction Agreement entered into between the Mississippi Transportation Commission (COMMISSION), by and through the Executive Director of the Mississippi Department of Transportation (MDOT) and the City of Ridgeland, by and through its duly authorized Mayor, executed on June 25, 2013, is entered into by the parties, effective as of the last date of execution.

WHEREAS, the Commission and the City entered into an Easement and Construction Agreement on June 25, 2013, that contains provisions related to the construction of Interstate 55 and connections to city streets owned by the City of Ridgeland and among other things, provides for portions of right-of-way that were acquired by the Commission to be transferred by deed to the City; and

WHEREAS, a portion of right-of-way acquired by the Commission for the construction of the I-55 project was not included in the Easement and Construction Agreement dated June 25, 2013 in the section of that Agreement that provides for the transfer of certain parcel of property to the City from the Commission (Section 5 of the of the Commission's Agreements found on Pages 3 and 4); and

WHEREAS, the Commission and the City desire to add an additional parcel of right-of-way to be conveyed to the City as part of the above-referenced Section 5 of the Agreement and to accomplish this by this Amendment to the Easement and Construction Agreement; and

NOW THEREFORE, for and in consideration of the covenants and promises contained in the Easement and Construction Agreement dated June 25, 2013 and the mutual benefits accruing to each party, the parties hereby agree to amend the Easement and Construction Agreement by addition of the following language on Page 3 in Subsection C of Section 5: "Also, that portion of Sunnybrook Road from Station 15+26.0842 to Station 20+01.95, as shown on Sheet 9 of 11 in blue color, this sheet being attached to this Amendment as Exhibit A.

All other provisions of the Easement and Construction Agreement dated June 25, 2013 shall remain in full force and effect as to each of the parties hereto.

WITNESS THE EXECUTION of this Amendment No. 1 on this the _____ day of _____ _____, 2018.

CITY OF RIDGELAND
BY AND THROUGH ITS DULY AUTHORIZED
MAYOR

BY: _____
GENE F. McGEE, MAYOR

ATTEST: _____
City Clerk (Affix Seal)

WITNESS THE EXECUTION of this Amendment No. 1 on this the _____ day of _____, 2018.

MISSISSIPPI TRANSPORTATION COMMISSION
BY AND THROUGH THE EXECUTIVE DIRECTOR
OF THE MISSISSIPPI DEPARTMENT OF
TRANSPORTATION

_____
MELINDA L. McGRATH, P.E.
EXECUTIVE DIRECTOR

Amendment No. 1 of the Easement and Construction Agreement between the Mississippi Transportation Commission and City of Ridgeland, Mississippi, filed at Book _____, Page _____ of the Minutes of the Commission.

L:\Dan\District 5\Amendment No. 1 Easement and Construction Agrmt w City of Ridgeland.docx

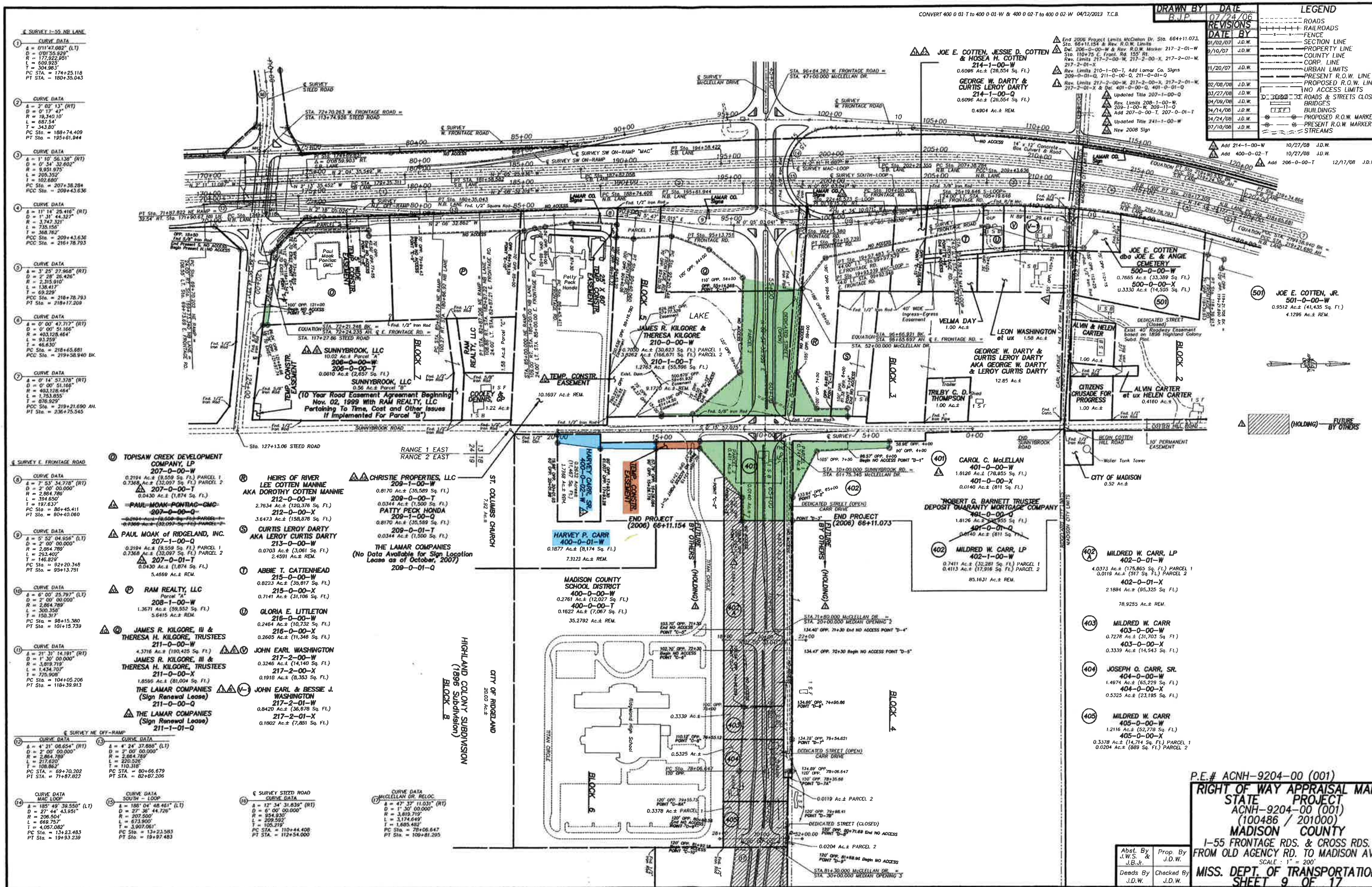
CONVERT 400 0 01 T to 400 0-01-W & 400 0 02-T to 400 0 02-W 04/12/2013 T.C.B.
DRAWN BY B.J.P. DATE 07/24/06
REVISIONS DATE BY
01/02/07 J.D.W.
9/10/07 J.D.W.
11/20/07 J.D.W.
02/08/08 J.D.W.
03/27/08 J.D.W.
04/09/08 J.D.W.
04/14/08 J.D.W.
04/24/08 J.D.W.
07/10/08 J.D.W.
LEGEND
ROADS
RAILROADS
FENCE
SECTION LINE
PROPERTY LINE
COUNTY LINE
CORP. LINE
URBAN LIMITS
PRESENT R.O.W. LINE
PROPOSED R.O.W. LINE
NO ACCESS LIMITS
ROADS & STREETS CLOSED
BRIDGES
BUILDINGS
PROPOSED R.O.W. MARKERS
PRESENT R.O.W. MARKERS
STREAMS
Add 214-1-00-W 10/27/08 J.D.W.
Add 400-0-02-T 10/27/08 J.D.W.
Add 206-0-00-T 12/17/08 J.D.W.
End 2006 Project Limits McClellan Dr. Sta. 664+11.073, Sta. 66+11.154 & Rev. R.O.W. Limits
Del. 206-0-00-W & Rev. R.O.W. Marker 217-2-01-W Sta. 110+75 E. Front. Rd. 155' Rt. Rev. Limits 217-2-00-W, 217-2-00-X, 217-2-01-W, 217-2-01-X
Rev. Limits 210-1-00-T, Add Lamar Co. Signs 209-0-01-Q, 211-0-00-Q, 211-0-01-Q
Rev. Limits 217-2-00-W, 217-2-00-X, 217-2-01-W, 217-2-01-X & Del. 401-0-00-Q, 401-0-01-Q
Updated Title 207-1-00-Q
Rev. Limits 208-1-00-W, 209-1-00-W, 209-11-0
Add 207-0-00-T, 207-0-01-T
Updated Title 241-1-00-W
New 2008 Sign
℄ SURVEY I-55 NB LANE
(1) CURVE DATA Δ = 0°11'47.082" (LT) D = 0°01'55.929" R = 177,922.951' L = 609.925' T = 304.963' PC STA. = 174+25.118 PT STA. = 180+35.043
(2) CURVE DATA Δ = 2° 02' 13" (RT) D = 0° 17' 47" R = 19,340.10' L = 687.54' T = 343.80' PC Sta. = 188+74.409 PT Sta. = 195+61.944
(3) CURVE DATA Δ = 1° 10' 56.138" (RT) D = 0° 34' 32.602" R = 9,951.975' L = 205.352' T = 102.680' PC Sta. = 207+38.284 PCC Sta. = 209+43.636
(4) CURVE DATA Δ = 11° 14' 25.416" (RT) D = 1° 31' 44.327" R = 3,747.321' L = 735.156' T = 368.762' PCC Sta. = 209+43.636 PCC Sta. = 216+78.793
(5) CURVE DATA Δ = 3° 25' 27.968" (RT) D = 2° 28' 26.426" R = 2,315.910' L = 138.417' T = 69.229' PCC Sta. = 216+78.793 PT Sta. = 218+17.209
(6) CURVE DATA Δ = 0° 00' 47.717" (RT) D = 0° 00' 51.166" R = 403,128.464' L = 93.259' T = 46.630' PC Sta. = 218+65.681 PCC Sta. = 219+58.940 BK.
(7) CURVE DATA Δ = 0° 14' 57.378" (RT) D = 0° 00' 51.166" R = 403,128.464' L = 1,753.655' T = 876.929' PCC Sta. = 219+21.690 AH. PT Sta. = 236+75.545
℄ SURVEY E. FRONTAGE ROAD
(8) CURVE DATA Δ = 7° 53' 34.778" (RT) D = 2° 00' 00.000" R = 2,864.789' L = 394.650' T = 197.637' PC Sta. = 86+45.411 PT Sta. = 90+40.060
(9) CURVE DATA Δ = 5° 52' 04.956" (LT) D = 2° 00' 00.000" R = 2,864.789' L = 293.402' T = 146.829' PC Sta. = 92+20.348 PT Sta. = 95+13.751
(10) CURVE DATA Δ = 6° 00' 25.797" (LT) D = 2° 00' 00.000" R = 2,864.789' L = 300.356' T = 150.317' PC Sta. = 98+15.380 PT Sta. = 101+15.739
(11) CURVE DATA Δ = 21° 31' 14.191" (RT) D = 1° 30' 00.000" R = 3,819.719' L = 1,434.707' T = 725.908' PC Sta. = 104+05.206 PT Sta. = 118+39.913
℄ SURVEY NE OFF-RAMP
(12) CURVE DATA Δ = 4° 21' 08.654" (RT) D = 2° 00' 00.000" R = 2,864.789' L = 217.620' T = 108.862' PC STA. = 69+70.202 PT STA. = 71+87.822
(13) CURVE DATA Δ = 4° 24' 37.888" (LT) D = 2° 00' 00.000" R = 2,864.789' L = 220.526' T = 110.318' PC STA. = 80+66.679 PT STA. = 82+87.206
(14) CURVE DATA MAC LOOP Δ = 185° 49' 39.550" (LT) D = 27° 44' 43.951" R = 206.504' L = 669.757' T = 4,057.082' PC Sta. = 13+23.483 PT Sta. = 19+93.239
(15) CURVE DATA SOUTH - LOOP Δ = 188° 04' 48.461" (LT) D = 27° 36' 44.726" R = 207.500' L = 673.900' T = 3,907.061' PC Sta. = 13+23.583 PT Sta. = 19+97.483
℄ SURVEY STEED ROAD
(16) CURVE DATA Δ = 12° 34' 31.639" (RT) D = 6° 00' 00.000" R = 954.930' L = 209.592' T = 105.219' PC STA. = 110+44.408 PT STA. = 112+54.000
(17) CURVE DATA McCLELLAN DR. RELOC. Δ = 47° 37' 11.031" (RT) D = 1° 30' 00.000" R = 3,819.719' L = 3,174.649' T = 1,685.482' PC Sta. = 78+06.647 PT Sta. = 109+81.295
(O) TOPISAW CREEK DEVELOPMENT COMPANY, LP
207-0-00-W
0.2194 Ac.± (9,559 Sq. Ft.) PARCEL 1
0.7368 Ac.± (32,097 Sq. Ft.) PARCEL 2
207-0-00-T
0.0430 Ac.± (1,874 Sq. Ft.)
~~PAUL MOAK PONTIAC-GMC 207-0-00-Q~~
PAUL MOAK of RIDGELAND, INC.
207-1-00-Q
0.2194 Ac.± (9,559 Sq. Ft.) PARCEL 1
0.7368 Ac.± (32,097 Sq. Ft.) PARCEL 2
207-0-01-T
0.0430 Ac.± (1,874 Sq. Ft.)
5.4669 Ac.± REM.
(P) RAM REALTY, LLC
Parcel "A"
208-1-00-W
1.3671 Ac.± (59,552 Sq. Ft.)
5.6415 Ac.± REM.
(Q) JAMES R. KILGORE, III & THERESA H. KILGORE, TRUSTEES
211-0-00-W
4.3716 Ac.± (190,425 Sq. Ft.)
JAMES R. KILGORE, III & THERESA H. KILGORE, TRUSTEES
211-0-00-X
1.8596 Ac.± (81,004 Sq. Ft.)
THE LAMAR COMPANIES (Sign Renewal Lease)
211-0-00-Q
THE LAMAR COMPANIES (Sign Renewal Lease)
211-1-01-Q
(R) HEIRS OF RIVER LEE COTTEN MANNIE AKA DOROTHY COTTEN MANNIE
212-0-00-W
2.7634 Ac.± (120,376 Sq. Ft.)
212-0-00-X
3.6473 Ac.± (158,876 Sq. Ft.)
(S) CURTIS LEROY DARTY AKA LEROY CURTIS DARTY
213-0-00-W
0.0703 Ac.± (3,061 Sq. Ft.)
2.4591 Ac.± REM.
(T) ABBIE T. CATTENHEAD
215-0-00-W
0.8223 Ac.± (35,817 Sq. Ft.)
215-0-00-X
0.7141 Ac.± (31,106 Sq. Ft.)
(U) GLORIA E. LITTLETON
216-0-00-W
0.2464 Ac.± (10,732 Sq. Ft.)
216-0-00-X
0.2605 Ac.± (11,346 Sq. Ft.)
(V) JOHN EARL WASHINGTON
217-2-00-W
0.3246 Ac.± (14,140 Sq. Ft.)
217-2-00-X
0.1918 Ac.± (8,353 Sq. Ft.)
(V-1) JOHN EARL & BESSIE J. WASHINGTON
217-2-01-W
0.8420 Ac.± (36,678 Sq. Ft.)
217-2-01-X
0.1802 Ac.± (7,851 Sq. Ft.)
CHRISTIE PROPERTIES, LLC
209-1-00-W
0.8170 Ac.± (35,589 Sq. Ft.)
209-0-00-T
0.0344 Ac.± (1,500 Sq. Ft.)
PATTY PECK HONDA
209-1-00-Q
0.8170 Ac.± (35,589 Sq. Ft.)
209-0-01-T
0.0344 Ac.± (1,500 Sq. Ft.)
THE LAMAR COMPANIES (No Data Available for Sign Location Lease as of October, 2007)
209-0-01-Q
SUNNYBROOK, LLC
10.02 Ac.± Parcel "A"
~~206-0-00-W~~
206-0-00-T
0.0610 Ac.± (2,657 Sq. Ft.)
SUNNYBROOK, LLC
0.56 Ac.± Parcel "B"
(10 Year Road Easement Agreement Beginning Nov. 02, 1999 With RAM REALTY, LLC Pertaining To Time, Cost and Other Issues If Implemented For Parcel "B")
JAMES R. KILGORE & THERESA KILGORE
210-0-00-W
0.7000 Ac.± (30,623 Sq. Ft.) PARCEL 1
3.8262 Ac.± (166,671 Sq. Ft.) PARCEL 2
210-1-00-T
1.2763 Ac.± (55,596 Sq. Ft.)
9.1720 Ac.± REM.
LAKE
TEMP. CONSTR. EASEMENT
10.1697 Ac.± REM.
COOLEY DENNIS
1.22 Ac.±
RAM REALTY, LLC
1.58 Ac.± Parcel "C"
Paul Moak Pontiac GMC
Patty Peck Honda
JOE E. COTTEN, JESSIE D. COTTEN & HOSEA H. COTTEN
214-1-00-W
0.6096 Ac.± (26,554 Sq. Ft.)
GEORGE W. DARTY & CURTIS LEROY DARTY
214-1-00-Q
0.6096 Ac.± (26,554 Sq. Ft.)
0.4904 Ac.± REM.
JOE E. COTTEN dba JOE E. & ANGIE CEMETERY
500-0-00-W
0.7665 Ac.± (33,389 Sq. Ft.)
500-0-00-X
0.3330 Ac.± (14,505 Sq. Ft.)
(501) JOE E. COTTEN, JR.
501-0-00-W
0.9512 Ac.± (41,435 Sq. Ft.)
4.1296 Ac.± REM.
VELMA DAY
1.00 Ac.±
LEON WASHINGTON et ux
1.58 Ac.±
GEORGE W. DARTY & CURTIS LEROY DARTY AKA GEORGE W. DARTY & LEROY CURTIS DARTY
12.85 Ac.±
TRILBY C. D. THOMPSON
1.00 Ac.±
ALVIN & HELEN CARTER
1.00 Ac.±
CITIZENS CRUSADE FOR PROGRESS
1.00 Ac.±
ALVIN CARTER et ux HELEN CARTER
0.4160 Ac.±
DEDICATED STREET (Closed)
Exist. 40' Roadway Easement based on 1896 Highland Colony Subd. Plat.
BLOCK 2
BLOCK 3
BLOCK 5
BLOCK 7
(HOLDING) FUTURE BY OTHERS
SUNNYBROOK ROAD
COTTEN HILL ROAD
BEGIN COTTEN HILL ROAD
END SUNNYBROOK ROAD
10' PERMANENT EASEMENT
Water Tank Tower
CITY OF MADISON
0.52 Ac.±
RANGE 1 EAST
RANGE 2 EAST
ST. COLUMBS CHURCH
7.92 Ac.±
HARVEY CARR, SR.
400-0-02-W
TEMP. CONSTR. EASEMENT
HARVEY P. CARR
400-0-01-W
0.1877 Ac.± (8,174 Sq. Ft.)
7.3123 Ac.± REM.
END PROJECT (2006) 66+11.154
END PROJECT (2006) 66+11.073
MADISON COUNTY SCHOOL DISTRICT
400-0-00-W
0.2761 Ac.± (12,027 Sq. Ft.)
400-0-00-T
0.1622 Ac.± (7,067 Sq. Ft.)
35.2792 Ac.± REM.
Ridgeland High School
TITAN CIRCLE
BLOCK 6
BLOCK 4
HIGHLAND COLONY SUBDIVISION (1896 Subdivision) BLOCK 8
CITY OF RIDGELAND
20.00 Ac.±
DEDICATED STREET (OPEN) CARR DRIVE
DEDICATED STREET (CLOSED)
0.3339 Ac.±
0.5325 Ac.±
0.3378 Ac.± PARCEL 1
0.0119 Ac.± PARCEL 2
0.0204 Ac.± PARCEL 2
(401) CAROL C. McLELLAN
401-0-00-W
1.8126 Ac.± (78,955 Sq. Ft.)
401-0-00-X
0.0140 Ac.± (611 Sq. Ft.)
~~ROBERT G. BARNETT TRUSTEE DEPOSIT GUARANTY MORTGAGE COMPANY 401-0-00-Q 401-0-01-Q~~
(402) MILDRED W. CARR, LP
402-1-00-W
0.7411 Ac.± (32,281 Sq. Ft.) PARCEL 1
0.4113 Ac.± (17,916 Sq. Ft.) PARCEL 2
85.1631 Ac.± REM.
(402A) MILDRED W. CARR, LP
402-0-01-W
4.0373 Ac.± (175,865 Sq. Ft.) PARCEL 1
0.0119 Ac.± (517 Sq. Ft.) PARCEL 2
402-0-01-X
2.1884 Ac.± (95,325 Sq. Ft.)
78.9255 Ac.± REM.
(403) MILDRED W. CARR
403-0-00-W
0.7278 Ac.± (31,703 Sq. Ft.)
403-0-00-X
0.3339 Ac.± (14,543 Sq. Ft.)
(404) JOSEPH O. CARR, SR.
404-0-00-W
1.4974 Ac.± (65,229 Sq. Ft.)
404-0-00-X
0.5325 Ac.± (23,195 Sq. Ft.)
(405) MILDRED W. CARR
405-0-00-W
1.2116 Ac.± (52,778 Sq. Ft.)
405-0-00-X
0.3378 Ac.± (14,714 Sq. Ft.) PARCEL 1
0.0204 Ac.± (889 Sq. Ft.) PARCEL 2
P.E.# ACNH-9204-00 (001)
RIGHT OF WAY APPRAISAL MAP
STATE PROJECT
ACNH-9204-00 (001)
(100486 / 201000)
MADISON COUNTY
I-55 FRONTAGE RDS. & CROSS RDS.
FROM OLD AGENCY RD. TO MADISON AVE.
SCALE : 1" = 200'
Abst. By J.W.S. & J.B.Jr.
Prop. By J.D.W.
Deeds By J.D.W.
Checked By J.D.W.
MISS. DEPT. OF TRANSPORTATION
SHEET 9 OF 17
U: \AJA\PROJECTS\ROW\I-55 MADISON\Final Sheets\Sht.2-East.Dwg

APPRAISAL REPORT

1.3587 acres

Lying along the south side of Colony Park Boulevard near Sunnybrook Road in the City of Ridgeland

Madison County, MS

Located in Section 18, T7N, R2E, Madison County

As of August 29, 2017

Appraisal for

Madison County School District

Appraised by

Brent L. Johnston
Old Town Realty & Appraisal Services, Inc.
P. O. Box 838
Ridgeland, MS 39158

APPRAISAL REPORT

This is an Appraisal Report which is intended to comply with the reporting requirements set forth under Standards Rule 2-2(b) of the Uniform Standards of Professional Appraisal Practice for an Appraisal Report. As such, it presents discussions of the data, reasoning, and analyses that were used in the appraisal process to develop the appraiser's opinion of value. Supporting documentation concerning the data, reasoning, and analyses is retained in the appraiser's file. The depth of discussion contained in this report is specific to the needs of the client and for the intended use stated above. The appraiser is not responsible for unauthorized use of this report.

CLIENT: Madison County School District
Attn. Letitia Reeves, 16th Section Land Manager
Madison County Schools
476 Highland Colony Parkway
Ridgeland, MS 39157

APPRAISER: Brent L. Johnston, GA #135
OLD TOWN REALTY & APPRAISAL SERVICES
P. O. Box 838
Ridgeland, MS 39158

SUBJECT: 1.3587 acres of Special Use property
South side of Colony Park Boulevard
Madison County, MS

MARKET VALUE DEFINITION:

The purpose of this appraisal is to provide the appraiser's best estimate of the market value of the subject real property, subject to the conditions and assumptions outlined herein, as of the inspection date. **Market value** is defined by the federal financial institutions regulatory agencies as follows:

Market value means the most probable price which a property should bring in a competitive and open market under all conditions requisite to a fair sale, the buyer and seller each acting prudently and knowledgeably, and assuming the price is not affected by undue stimulus. Implicit in this definition is the consummation of a sale as of a specified date and the passing of title from seller to buyer under conditions whereby

(1) buyer and seller are typically motivated;
(2) both parties are well informed or well advised, and acting in what they consider their own best interests;

MARKET VALUE DEFINITION:
continued

(3) a reasonable time is allowed for exposure in the open market;
(4) payment is made in terms of cash in U.S. dollars or in terms of financial arrangements comparable thereto; and
(5) the price represents the normal consideration for the property sold unaffected by special or creative financing or sales concessions granted by anyone associated with the sale.

(Source: Office of the Comptroller of the Currency under 12 CFR, Part 34, Subpart C-Appraisals, 34.42 Definitions.)

INTENDED USE OF THE APPRAISAL: The appraisal will be used to determine fair market value for the 1.3587 acres for the purpose of arriving at a purchase price for the subject.

INTENDED USER: The intended user is the Madison County School District. The use of this appraisal is limited to this entity. Permission from the appraiser must be obtained for any other use or user.

INTEREST VALUED: Fee Simple

EFFECTIVE DATE OF VALUE: August 29, 2017

DATE OF REPORT: August 30, 2017

APPRAISAL DEVELOPMENT AND REPORTING PROCESS: In preparing this report, the appraiser

- inspected the subject land;
- gathered information on comparable land sales
- confirmed and analyzed the data and has considered the sales comparison, cost, and income approaches;

To develop the opinion of value, the appraiser performed an appraisal process as defined by the Uniform Standards of Professional Appraisal Practice.

This appraisal report is a brief recapitulation of the appraiser's data, analyses, and conclusions. Additional supporting documentation is retained in the appraiser's file.

THE APPRAISAL PROCESS

Cost Approach

The Cost Approach is generally accorded the greatest credence in instances where the property being appraised is either a proposed property or a new property having little or no accrued depreciation or instances where the property being appraised represents a special purpose type property. In these instances, the Cost Approach is an accurate indication of value of the property and is accorded considerable credence in the reconciliation process.

Sales Comparison Approach

The Market Data or Sales Comparison Approach utilizes sales of comparable properties in either the immediate proximity of the subject or in other comparable areas to derive a unit of comparison. Each of the various comparable sales is carefully reviewed and analyzed by the appraiser and adjusted for any dissimilarities between the subject property and the comparable sale in such areas as date of sale, location, design, condition, and other physical characteristics to result in an adjusted unit of comparison to be utilized in the Market Data or Sales Comparison Approach providing an indication of value for the property being appraised.

Income Approach

The Income Approach to value utilizes an estimate of gross annual income to be generated by the property being appraised as determined to be representative of economic rentals for this type property within the area less an allowance considered typical for vacancy and collection losses to arrive at an estimate of effective gross annual income which is to be generated by the property. Expenses typically associated with the operation of this type property in accordance with prevailing lease terms and conditions in the area as well as data provided by analysis of the operating history of other similar type properties are projected and deducted from the effective gross annual income to arrive at an estimate of net operating income before recapture attributable to the subject. This net operating income is then capitalized by the most appropriate method available with respect to the subject property in particular and the appraisal problem in general into an indication of value for the property being appraised from the Income Approach. Another method of utilizing the Income Approach is the Gross Rent Multiplier technique. This technique identifies the relationship between the sales price (value) of a property and its gross annual income earning potential. The Gross Rent Multiplier is derived by dividing the sales price of a property by its gross potential income and, thus, is an indicator of buyer, seller and investor attitudes toward the property being analyzed.

The reconciliation process is the method whereby all data provided by the various approaches utilized in the appraisal report are carefully analyzed and accorded weight in varying degrees. The approach which is considered to be the most representative of current buyer, seller, and investor attitudes towards the subject property is accorded the greatest credence in the final analysis; but, all the approaches are interrelated and all data gathered and utilized in the various approaches must be carefully analyzed in the reconciliation process. To ignore any available data would be improper.

SCOPE OF THE INVESTIGATION

All inspections and data collections were completed by the appraiser. The subject property has been inspected. Likewise, the neighborhood has been inspected with regard to observed characteristics and trends.

All comparable vacant land sales have been analyzed . Information obtained from the county area governmental agencies has been utilized in order to offer an indication of the characteristics of the City and County area and the anticipated changes in population, employment, industrial development and growth corridors.

Information provided by local public officials has been utilized for the development of information regarding zoning, utilities, flood hazards, neighborhood characteristics and other determinates affecting highest and best use of the subject property.

In the final analysis, the appraiser relied upon the exercise of judgment based on his opinion of the quantity and the quality of data in arriving at the final value estimate.

FIVE-YEAR OWNERSHIP HISTORY

This property was owned for many years by the Mildred W. Carr Limited Partnership. On November 6, 2014, this parcel and others were transferred from that ownership to the City of Ridgeland which was acquiring property to build the Colony Park Boulevard.

TAXES

This area has not yet been platted out on the Madison County tax maps. It lies adjacent to and north of Parcel #072D-18C-002/03 and extends eastward lying adjacent to and north of approximately half of Parcel #072D-18C-004/02.

The land is not taxable under ownership by the City of Ridgeland. It will not be taxed when it is purchased by the Madison County School Board.

ZONING

Zoning near the subject has been Agricultural and Residential. The planned use for the property would indicate a Special Use zoning classification.

HIGHEST AND BEST USE

Highest and best use: The use that maximizes return to the land. Highest and best use must meet four criteria:

1. It must be physically possible.
2. It must be financially feasible.
3. It must be legally permissible.
4. It must be maximally productive.

Highest and best use as though vacant: The highest and best use of the subject as vacant would be for Special Use as an extension of the Ridgeland High School grounds.

Highest and best use as improved: There are no improvements on the subject.

SUBJECT PROPERTY INSPECTION

The property was inspected on August 29, 2017.

LEGAL DESCRIPTION

No current legal description is available for the subject tract. Michael Baker Engineering will need to resurvey the eastern section of subject Parcel 100 containing 1.3587 acres and deduct the 1.7765 acres already acquired by the MCSB out of Parcel 100. It is located in Section 18, Township 7 North, Range 2 East of Madison County, Mississippi.

PHOTOGRAPHS OF SUBJECT

Subject looking west to Sunnybrook Road

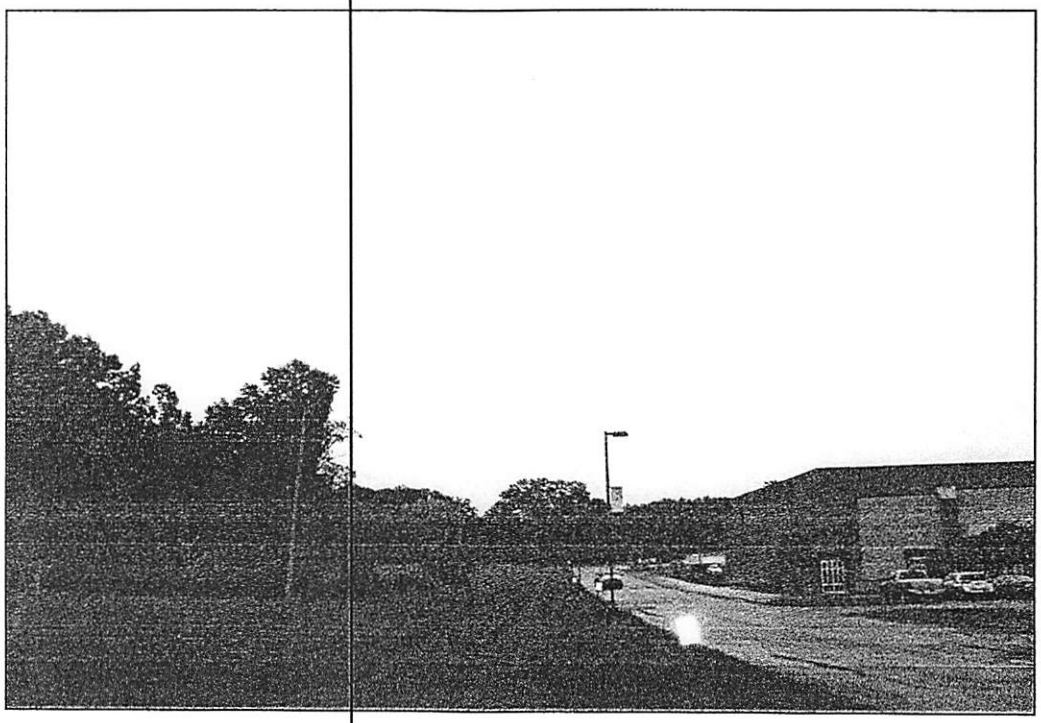

Looking east toward Ridgeland High School from land previously purchased by the MCSB

PHOTOGRAPHS OF SUBJECT

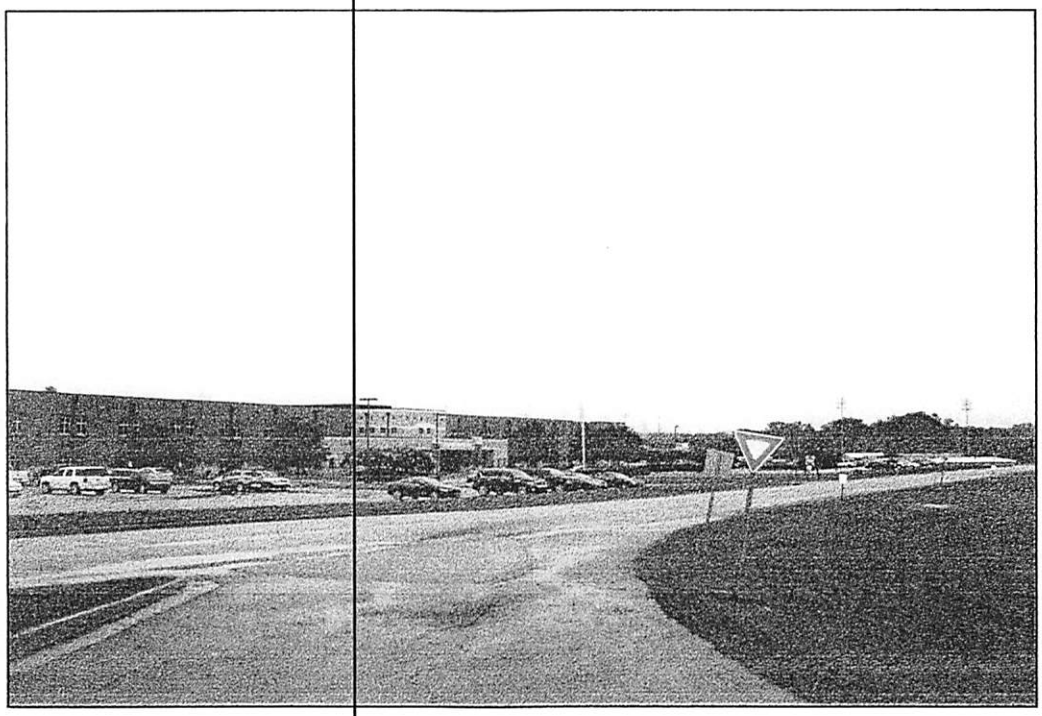

Looking from intersection of access road toward high school

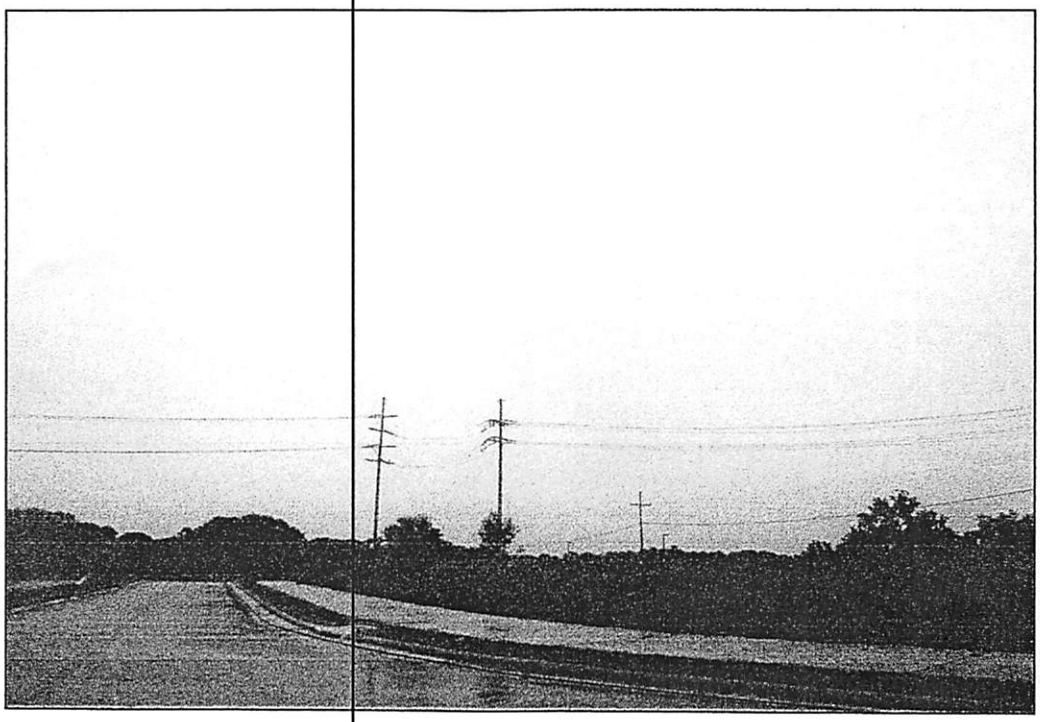

Spur of Colony Park Boulevard east of Sunnybrook Road - subject to the south

PHOTOGRAPHS OF SUBJECT

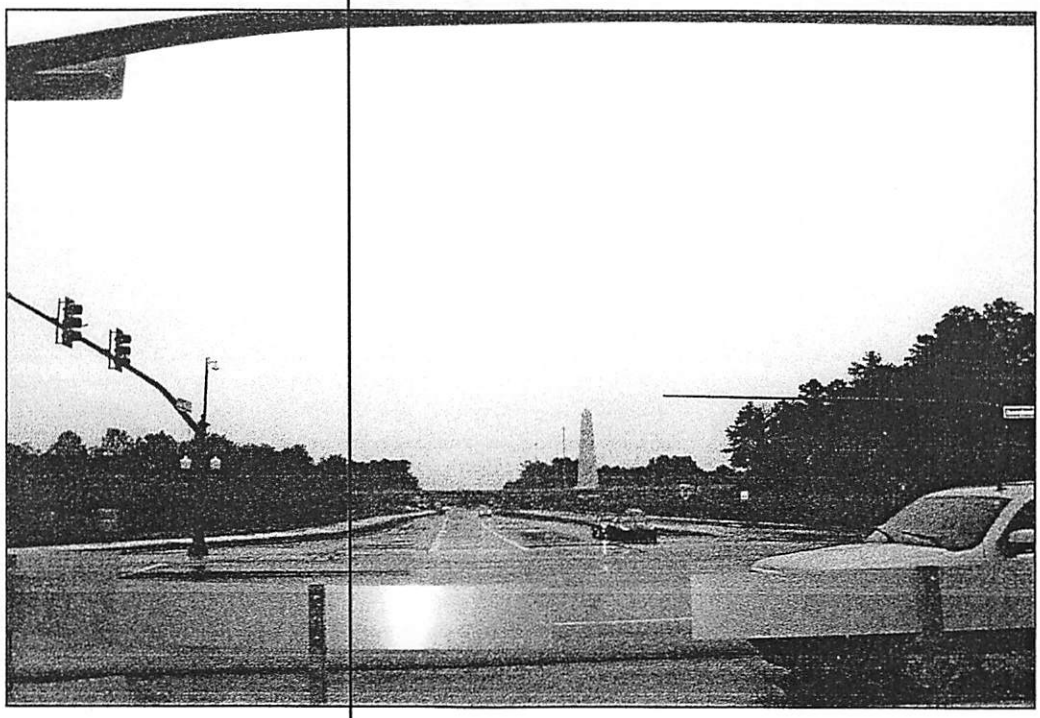

Looking west on Colony Park Boulevard from Sunnybrook Road

LOCATION MAP

AERIAL PHOTOGRAPH

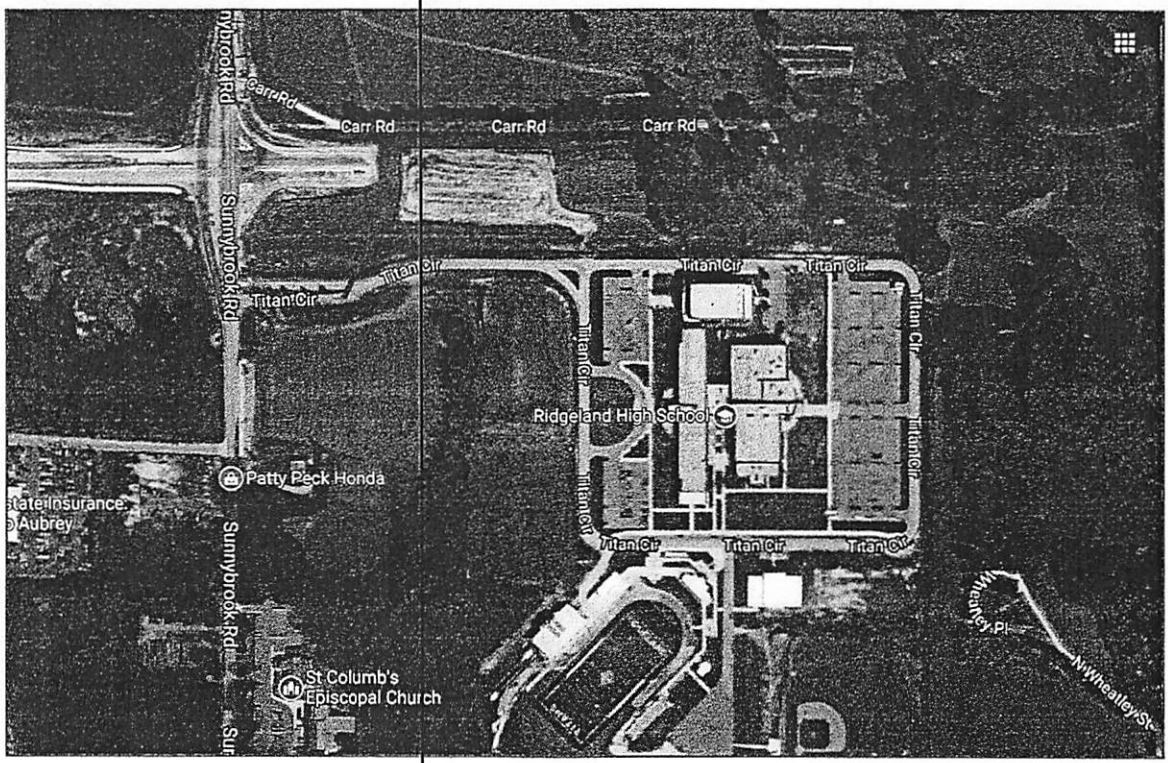

FLOOD MAP

InterFlood by eid place

Prepared for: Old Town Realty & Appraisal Service, Inc.
Titan Circle
Ridgeland, MS 39157

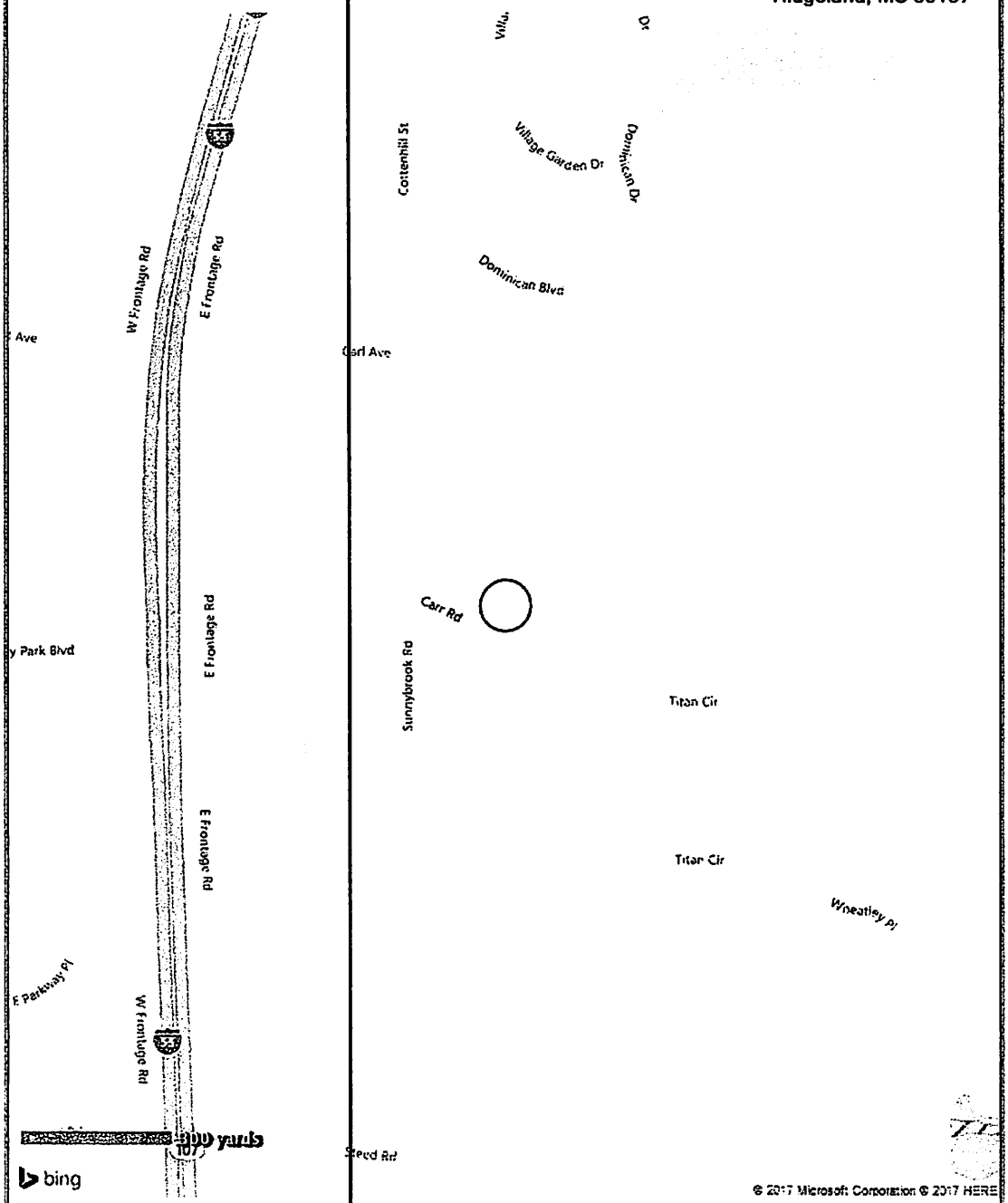

MAP DATA

FEMA Special Flood Hazard Area: No
Map Number: 28089C0559F
Zone: X
Map Date: March 17, 2010
FIPS: 28089

MAP LEGEND

- Areas inundated by 500-year flooding
- Areas inundated by 100-year flooding
- Velocity Hazard
- Protected Areas
- Floodway
- Subject Area

MARKET AREA DATA

The primary market area is Ridgeland and Madison with growing populations and the surrounding area in Madison County.

Most of the subdivisions in Ridgeland proper are built-out developments. There are new subdivisions out from Ridgeland across I-55 which are being developed for larger homes.

Most of Ridgeland along the Highway 51 corridor has already been developed commercially. The majority of new commercial development is along the Highland Colony Parkway and near the I-55 interchange at Jackson Street and Old Agency Road. There are still small infill parcels available along Highway 51 with several small strip centers having been developed on Highway and along Old Canton Road.

Holmes Community College, which is a non-resident educational facility, lies just a few blocks west of Highway 51. Ridgeland High School is located north of Holmes Community College and east of Sunnybrook Road. There are also a church, a children's home, and St. Catherine's retirement and assisted living facility on Sunnybrook Road. There are also several automobile dealerships which have access from Sunnybrook Road.

RIDGELAND CITY DATA:

Ridgeland, Mississippi is a city of about 25,000 people bordering Jackson, MS several blocks to the south. Jackson is the state capital and has a metro population of about 500,000. I-55, a main north-south interstate highway, passes through Ridgeland several blocks west of the subject. Also I-220 intersects I-55 at Ridgeland and connects with I-20, a main east-west corridor.

While many people in the area still commute to Jackson to work, Ridgeland is an independent community within the Metro Jackson area. In the past few years, several financial institutions, law firms and medical facilities have moved to Ridgeland, many of which have located along Highland Colony Parkway. In addition there is an upscale open air shopping development, the Renaissance, on the northeast corner of Old Agency Road and Highland Colony Parkway near the I-55 interchange, which is a regional draw. On the east side of I-55, a large shopping mall, Northpark, is located in the city with several smaller satellite centers. Many new strip centers have been developed in the Lake Harbour/Old Canton Road area. An Olde Towne commercial area has been developed along Jackson Street between I-55 and Highway 51.

Lake Harbour Drive, a major east-west corridor through Ridgeland, has been widened to accommodate increased traffic in this area. An extension of Lake Harbour is underway which will connect to Highland Colony Parkway which is west of I-55. Another project, Colony Park Boulevard, will be an east-west connector from Highway 51 in Ridgeland to Highland Colony Parkway.

RIDGELAND CITY DATA:
continued

There is an excellent school system in Ridgeland. The city has a good fire department. The rating class is 7. There is very little crime in Ridgeland with a large and very effective police department for this size town.

There is a mayor/alderman type of city government that is favorable to well-planned business growth. A comprehensive plan for future development in Ridgeland has been developed to ensure that the city continues to grow in an attractive manner.

SITE DESCRIPTION

This is a narrow Uneconomic Remnant which was part of the Carr family land purchased to construct Colony Park Boulevard connecting Highway 51 to the I-55 Frontage Road. It lies just east of Sunnybrook Road and north of Ridgeland High School. (See attached plat.)

It is a 1.3587-acre relatively level site with no access directly to the new road. There is, however, an access point to Ridgeland High School as per a written agreement with the City of Ridgeland and the Madison County School Board.

This parcel has limited utility except as an extension of the Ridgeland High School campus. Other Uneconomic Remnant parcels to the east containing 1.7765 acres were previously purchased by the MCSB. The subject tract adjoins the previous purchase and lies to the west of it.

ENVIRONMENTAL STATEMENT

There are no apparent environmental problems in the area in the immediate area. We are not experts in this field and if there were any questions, an environmental audit should be done.

FLOOD STATEMENT

A check of the HUD flood maps indicates that the property is located out of a flood hazard area in Zone X.

MARKET TIME

Market time is 12-24 months for property in this area according to MLS and real estate brokers. Exposure time is also 12-24 months.

PLAT OF PROPOSED PURCHASE BY MCSB

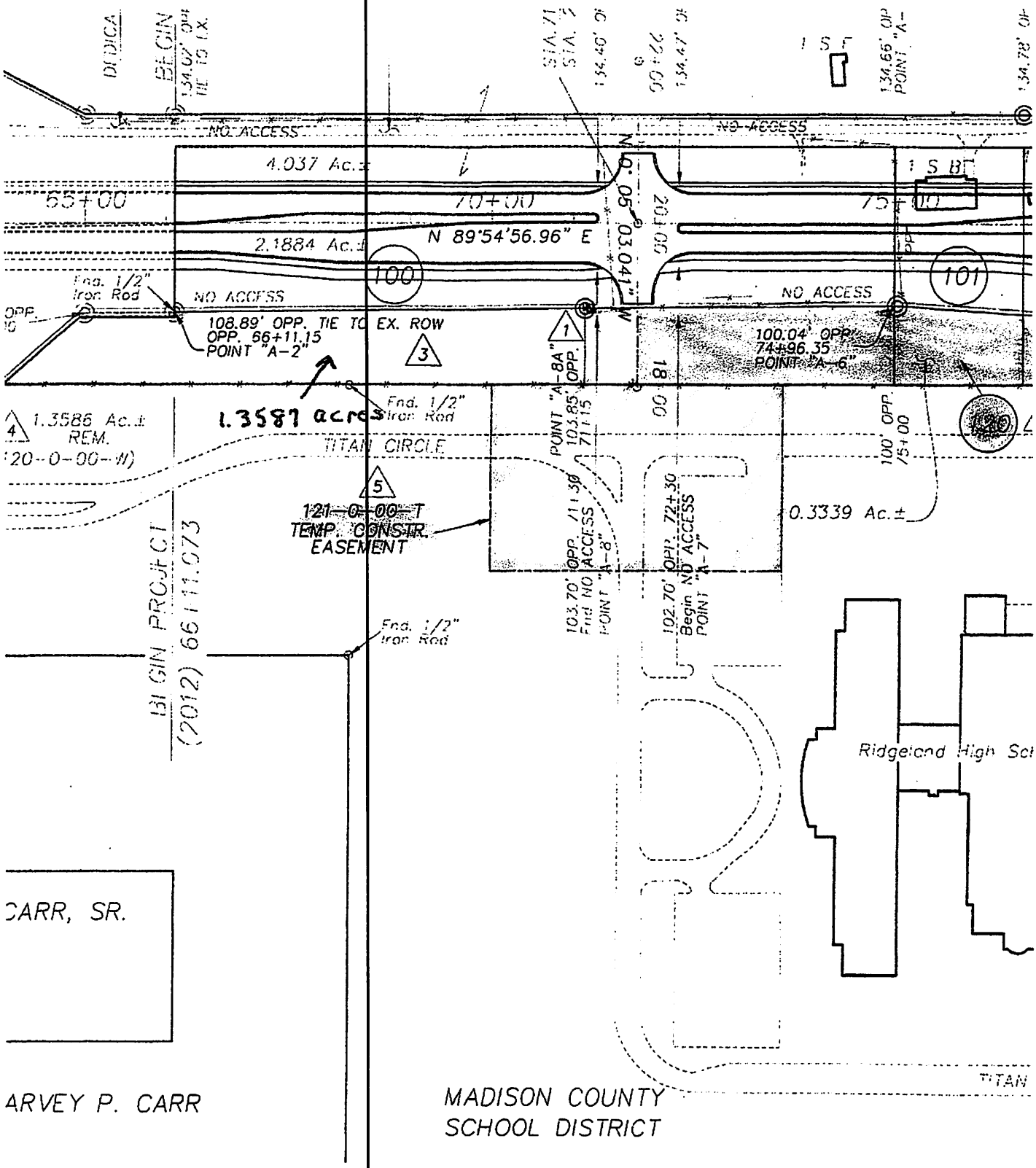

APPROACHES TO VALUE

COST APPROACH

The cost approach was considered but not judged to be relevant since there are no improvements on the property.

INCOME APPROACH

The income approach was considered but not judged to be relevant since there are no improvements.

SALES COMPARISON APPROACH

The primary adjustments made relate to market conditions, (is the sale current?), location (the relationship of the subject to the sales location), and physical characteristics such as size. These adjustments are shown on the grid below. The subject is part of a larger land area.

Comparable Sales Grid

Subject – 1.3587 acres located on the east side of Sunnybrook Road and west of Highway 51, Madison County. All sales are in Madison County.

Sale	Location	Sales Price per acre	Market Adjust-ment per acre	Location Adjust-ment per acre	Physical Characteristics Adjustment per acre	Total Adjust-ments per acre	Adjusted Value per acre
1	Lot 12B Cedarmont Dr., Cedarmont S/D, Madison, MS	63,000	2015 sale - current	Superior - Close in and In protected subdivision w/covenants -18,000	1.5 acres Similar size	-18,000	45,000
2	Lot 204 Cove Lane, Lake Caroline, Madison, MS	33,333	2016 sale - current	Inferior - further out +10,000	3.0 acres Similar size	+10,000	43,300 RO
3	Normandy Circle, Newcastle, off of Mannsdale Road, Madison, MS	28,600	2015 sale - current	Inferior - further out +10,000	1.5 acres Similar size	+10,000	38,600
4	S/S Mannsdale Road at Gray's Lane, Madison, MS	30,000	2014 sale considered current	Inferior - further out +10,000	3.0 acres Similar size	+10,000	40,000 RO

Discussion of subject and land sales:

The subject property contains 1.3587 acres and is comprised of the remainder of Uneconomic Remnant Parcel 100 left from the previous purchase by the Madison County School Board from the City of Ridgeland. This land is level to sloping and lies to the west of the land already purchased by the Madison County School Board.

The area that the Madison County School Board wishes to purchase from the City of Ridgeland is narrow with limited access and lack of utility because of irregular and narrow shape. It would be useful only as plottage. In my opinion it would have value only to the MCSB to expand the campus of the Ridgeland High School to which it is adjacent. Therefore the appraiser has damaged this property at 80%.

SALES COMPARISON APPROACH:
Discussion of subject and land sales - continued

The land sales used were all similar in most respects to the subject. The size of the land sales ranged from 1.5 acres to 3.0 acres. These were considered in the same range as the subject area to be acquired with 1.3587 acres.

The topography of the subject and all sales was level to gently rolling.

All sales were considered current with one sale closing in 2014, two sales closing in 2015 and one closing in 2016. Sales prices have remained relatively stable during this time period.

The main adjustment factor was location. Sales 2, 3 and 4 were located farther from the urban areas of Madison County. Sale 1 is conveniently located in Madison near shopping and offices and also is in a protected subdivision with covenants. The location of Sale 1 is more similar to that of the subject in Ridgeland near schools, churches and shopping. Therefore a downward location adjustment was made to Sale 1 and upward adjustments were make to Sales 2, 3 and 4.

Based on adjusted land sales, a value of $43,000 per acre was chosen as the value of the subject land. However, the subject land was damaged at 80% because of limited access, narrow shape and lack of utility to any parties other than Ridgeland High School, leaving 20% of the original land value after damages were applied.

$43,000 x 20% = $8,600 -remaining land value per acre after damages
1.3587 acres x $8,600/acre = $11,685 RO

The value for the subject land by the Sales Comparison Approach after damages is $11,685 RO.

CORRELATION OF VALUE

The cost approach was considered but not used since no improvements were valued.

The income approach was considered but not used as vacant land is not generally leased in this area.

The sales comparison or market value approach was considered the most valid approach to value.

The opinion of estimated value by the sales comparison approach for the subject vacant land after damages is $11,685.

Effective date of appraisal:	**August 29, 2017**
Date inspected:	**August 29, 2017**
Date of report:	**August 30, 2017**

Brent L. Johnston
State Certified General Appraiser #135

CERTIFICATION

I certify that, to the best of my knowledge and belief:

- The statements of fact contained in this report are true and correct.
- The reported analyses, opinions, and conclusions are limited only by the reported assumptions and limiting conditions, and are my personal, impartial, and unbiased professional analyses, opinions, and conclusions.
- I have no present or prospective interest in the property that is the subject of this report, and no personal interest with respect to the parties involved.
- I have performed no services, as an appraiser or in any other capacity, regarding the property that is the subject of this report within the three-year period immediately preceding acceptance of this assignment.
- I have no bias with respect to the property that is the subject of this report or to the parties involved with this assignment.
- My engagement in this assignment was not contingent upon developing or reporting predetermined results.
- My compensation for completing this assignment is not contingent upon the development or reporting of a predetermined value or direction in value that favors the cause of the client, the amount of the value opinion, the attainment of a stipulated result, or the occurrence of a subsequent event directly related to the intended use of this appraisal.
- My analyses, opinions, and conclusions were developed, and this report has been prepared, in conformity with the Uniform Standards of Professional Appraisal Practice.
- An inspection of the subject property has been made and the property owner, or his/her designated representative, was given the opportunity to be present at the property inspection.
- I am competent to complete this appraisal and report.

Brent L. Johnston
State Certified General Appraiser #135

August 30, 2017
Date

CONTINGENT AND LIMITING CONDITIONS

The certification of the Appraiser appearing in the appraisal report is subject to the following conditions and to such other specific and limiting conditions as are set forth by the Appraiser in the report.

1. The Appraiser assumes no responsibility for matters of a legal nature affecting the property appraised or the title thereto, nor does the Appraiser render any opinion as to the title, which is assumed to be good and marketable. The property is appraised as though under responsible ownership.

2. Any sketch in the report may show approximate dimensions and is included to assist the reader in visualizing the property. The Appraiser has made no survey of the property.

3. The Appraiser is not required to give testimony or appear in court because of having made the appraisal with reference to the property in question, unless arrangements have been previously made therefore.

4. Any distribution of the valuation in the report between land and improvements applies only under the existing program of utilization. The separate valuations for land and building must not be used in conjunction with any other appraisal and are invalid if so used.

5. The Appraiser assumes that there are no hidden or unapparent conditions of the property, subsoil, or structures, which would render it more or less valuable. The Appraiser assumes no responsibility for such conditions, or for engineering which might be required to discover such factors.

6. Information, estimates, and opinions furnished to the Appraiser and contained in the report, were obtained from sources considered reliable and believed to be true and correct. However, no responsibility for accuracy of such items furnished the Appraiser can be assumed by the Appraiser.

7. Disclosure of the contents of the appraisal report is governed by the Bylaws and Regulations of the professional appraisal organizations with which the Appraiser is affiliated.

8. Neither all, nor any part of the content of the report, or copy thereof (including conclusions as to the property value, the identity of the Appraiser, professional designations, reference to any professional appraisal organizations, or the firm with which the Appraiser is connected), shall be used for any purposes by anyone but the client specified in the report,

CONTINGENT AND LIMITING CONDITIONS
continued

without the previous written consent of the Appraiser; nor shall it be conveyed by anyone to the public through advertising, public relations, news, sales, or other media, without the written consent and approval of the Appraiser.

9. On all appraisals, subject to satisfactory completion, repairs, or alterations, the appraisal report and value conclusion are contingent upon completion of the improvements in a workman like manner.

10. Not all sales were personally verified but had previously been verified by other real estate brokers or appraisers. This information is assumed to be correct but cannot be guaranteed, as it is based on the assumption that sellers and buyers and real estate brokers have correct information as the sales price is not recorded in most cases. The acreage and other information is generally recorded and is verifiable by the public; however, there may be slight variations. The general area of the sales was inspected, but not every sale was personally inspected.

11. This appraisal report has been made in conformity with, and is subject to, the requirements of the Code of Professional Ethics and Standards of Professional Conduct of the appraisal organizations with which the Appraiser is affiliated, as well as Uniform Standards of Professional Appraisal Practice Standards Rule 2/3, 1994 edition. This appraisal is also in accordance with the Appraisal Foundation.

12. The appraiser is not responsible for any existing environmental conditions as he is not an expert in this field and has a responsibility only to report any conditions that may relate to environmental problems. A qualified environmental auditor should be consulted about any potential problems and the general environmental condition should be reported in a Phase I or Phase II audit as needed.

Date: August 30, 2017

Appraiser: _____

Brent L. Johnston
State Certified GA #135

APPRAISAL QUALIFICATIONS

BRENT L. JOHNSTON

OLD TOWN REALTY & APPRAISAL SERVICES, INC.
P. O. Box 838, Ridgeland, MS 39158
Tax Identification No. 64-079-2618

FORMAL EDUCATION:

Bachelor of Arts, Millsaps College, Jackson, Mississippi
Masters' Degree, Mississippi College, Clinton, Mississippi

APPRAISAL EDUCATION

American Institute of Real Estate Appraisers:

Course I	Principles and Techniques
Course II	Commercial Property and Income Approach
Course VIII	Residential
Course RS/GS	Standards of Professional Practice
Course	Condemnation and Right-of-Way Appraising
Course	Forestry Appraisal Guidelines
GRI: Course I	Board of Realtors

Louisiana State University, Dept. of Environmental Sciences - EPA-approved courses:
Appraisal and Inspection of Asbestos
Management of Asbestos

Lee and Grant Company - Appraising 1 to 4 Family Residential Rentals;
Principles of Land Valuation

State of Mississippi – Standards of Professional Practice Update – Real Estate Law
State of Mississippi – 28 hours of continuing education every 2 years

EXPERIENCE

Prudential Insurance Co. of America, Real Estate Division:
6-month training program in real estate appraisal
7 years as reviewing appraiser for commercial, farm and residential properties
Self-employed since 1969 in real estate appraisal, construction, and development, principally in appraisal field since 1990

PROFESSIONAL DESIGNATIONS AND AFFILIATIONS

Employment Relocation Council
Designation: Certified Relocation Professional
EPA-Approved Asbestos Inspector and Manager of Asbestos
State of Mississippi Real Estate Broker
Jackson Board of Realtors
State of Mississippi and National Boards of Realtors
Multiple Listing Service
State Certified General Real Estate Appraiser #135
Contract Appraiser for government agencies – HUD, FSA, and USDA Natural Resources Conservation Agency

City of Ridgeland
123-0-00-W
Madison County, MS
Colony Park Boulevard
100486-203000 [ACNH-9204-00(003)]

INDEX INSTRUCTIONS:

SW1/4 of SW1/4 of Section 18
Township 7 North, Range 2 East
City of Ridgeland
Madison County, Mississippi

The following description is based on the Mississippi State Plane Coordinate System, West Zone, NAD 83 (93) grid values, U.S. Survey Feet, using a combined factor of 0.999941015 and a convergence angle of plus (+) 00°06'31" as developed by Michael Baker International for the City of Ridgeland Colony Park Boulevard Project. It is the intent of this description to convey the Grantor's property lying between the New southern right-of-way line of Colony Park Boulevard and the current (2018) Northern property line of the Madison County School District property and being more particularly described as follows:

COMMENCING at found 1-1/2" x 1/2" iron bar representing the Northeast corner of Section 18, Township 7 North, Range 2 East, Madison County, Mississippi, having grid coordinates N=1,075,891.401, E=2,361,306.128 based on the above referenced coordinate system; run thence South 46°36'34" West a distance of 6001.68 feet to the New Colony Park Boulevard Project Centerline at Station 71+15.00 as shown on the Appraisal Maps for the above referenced Project, also being referenced to as Mississippi Department of Transportation Project No. 100486-203000 [ACNH-9204-00(003)]; thence run South 00°05'03" East a distance of 103.85 feet to a found 3/4" iron rebar in the southern right-of-way line for said Colony Park Boulevard at Project Centerline Station 71+15.00, same being at the Grantor's northeasterly property corner and also being hereby designated as Point "A-8A" for future reference and being the **Point of Beginning** for the parcel of land herein conveyed:

From said **Point of Beginning** run along the Grantor's eastern property line South 00°05'03" East a distance of 93.00 feet to a found 3/4" rebar in the Grantor's southern property line, and being 196.85 feet southerly of, as measured perpendicular to, said Colony Park Boulevard Project Centerline at Station 71+15.00;

Thence run along the Grantor's said southern property line South 89°52'22" West a distance of 714.74 feet to a set 5/8" iron rebar at the intersection with the present southerly right of way line of Colony Park Boulevard;

Thence North 48°41'36" East a distance 125.22 feet along said present southerly right of way line of Colony Park Boulevard to a set 5/8" iron rebar in the Grantor's northern property line;

Thence along the Grantor's said northerly property line North 89°52'21" East a distance of 116.71 feet to a set 5/8" iron rebar;

Thence North 00°57'31" West a distance of 5.89 feet to a found 3/4" iron rebar in the present southern right of way line of said Colony Park Boulevard, being 108.89 feet southerly of, as measured perpendicular to, said Colony Park Boulevard Project Centerline at Station 66+11.07 and being hereby designated as Point "A-2" for future reference;

Thence along said present southern right of way line of said Colony Park Boulevard, same being the Grantor's northerly property line, North 89°20'35" East a distance of 503.96 feet to said **Point of Beginning.**

The above described parcel of land contains 1.3586 acres (59,181 sq. ft.), more or less, and being situated in and a part of the Southwest Quarter (SW1/4) of the Southwest Quarter (SW1/4) of Section 18, Township 7 North, Range 2 East, City of Ridgeland, Madison County, Mississippi and also being situated in and a part of Lot 3 and Lot 4, Block 6 of the 1896 Highland Colony Subdivision, and

Together with any and all abutter's rights of access, if any, in, to, over, on and across the above described parcel of land between Point "A-2" and Point "A-8A" as designated above and as shown on the plans for said Colony Park Boulevard Project.

JAMES M. TYLER
REGISTERED PROFESSIONAL
Land Surveyor
P.L.S. 02697
STATE OF MISSISSIPPI

James M. Tyler, P.L.S. No. 02697

PREPARED BY:

MICHAEL BAKER, JR., INC.
310 New Pointe Drive
Ridgeland, Mississippi 39157
Phone (601) 607-8700

CLASSIFICATION

This Survey meets the minimum requirements of the standards for Land Surveyors in Mississippi for Class "B" Surveys as adopted by the State Board of Registration For Professional Engineers & Land Surveyors.

Date Of Field Survey: May 15, 2018

REFERENCE MATERIAL:

1). DB. 3412 at PG. 594 & DB. 3144 at Pg. 10.
2). MDOT ROW Appraisal Map, State Project 100486-203000.
3). Madison County Tax Maps, Quad Maps, GLO Plats and Field Notes.
4). HIGHLAND COLONY PLAT by J.P. George dated March, 1896. Plat Book 1 at Pg. 29.

EXHIBIT "B"

0 200 400 600
SCALE IN FEET

N

◉ Denotes Found ¾" X 30" Iron Rebar
⊙ Denotes Set ⅝" X 18" Iron Rebar

Line Table

Name	Length	Direction
L1	93.00	S 00°05'03" E
L2	125.22	N 48°41'36" E
L3	116.71	N 89°52'21" E
L4	5.89	N 00°57'31" W

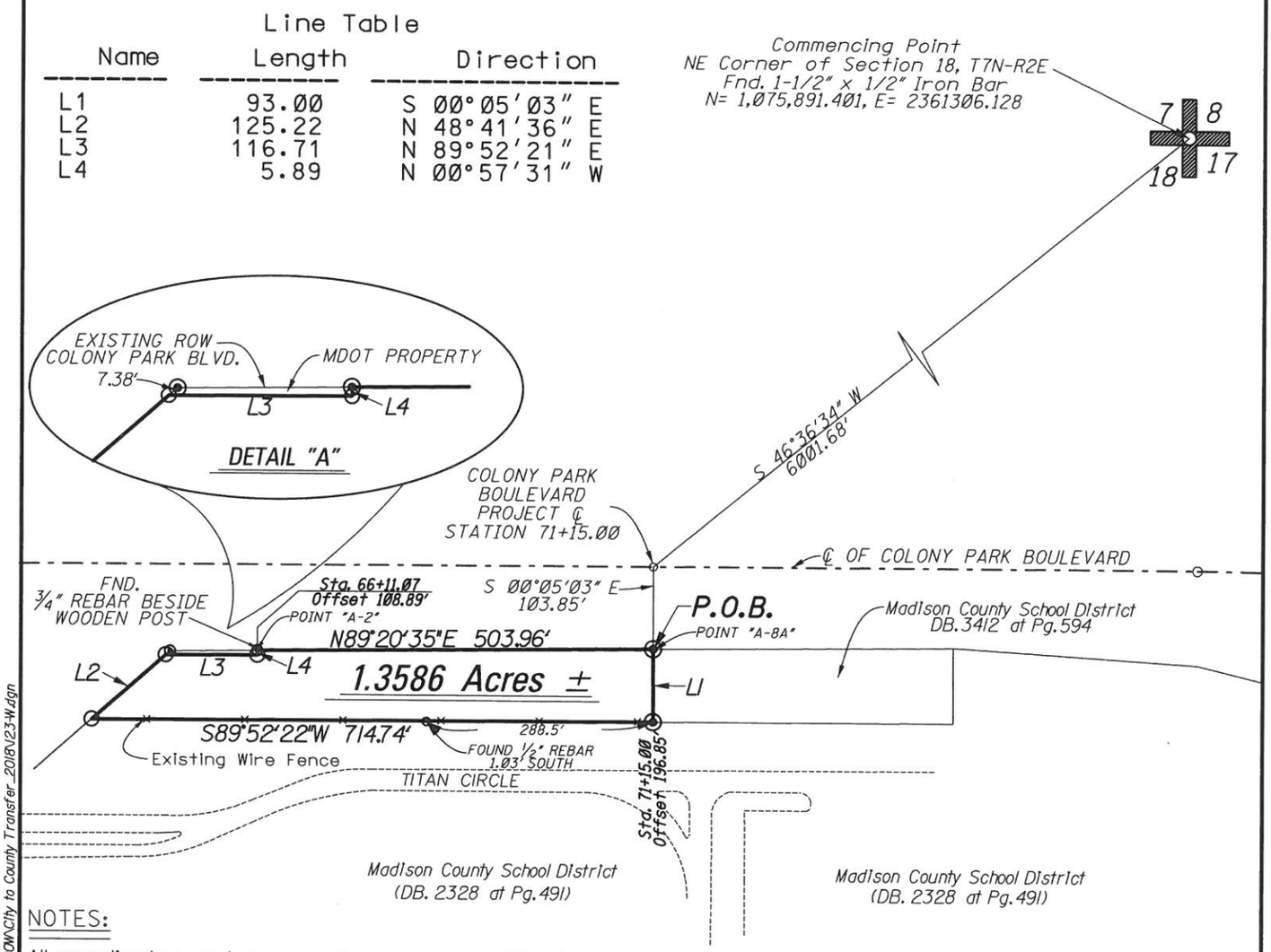

NOTES:

All coordinates and courses hereon are grid values, based on Mississippi State Plane Coordinate System, West Zone, NAD83 (93), using a combined factor of 0.999941015 and a convergence angle of plus (+) 00°06'31". Bearings are grid North based on said coordinate system and were derived by GPS Survey. Tied to MDOT GPS Monument Station "KP03" having SPC of, N= 1080291.61, E= 2357991.22.

SW1/4 of SW1/4	PLAT OF SURVEY	CITY OF RIDGELAND PARCEL TRANSFER TO MADISON COUNTY SCHOOL DISTRICT
SECTION 18, T7N-R2E	COLONY PARK BOULEVARD	PROJECT: CITY OF RIDGELAND, MS. COLONY PARK BOULEVARD
COUNTY: MADISON	DATE: 17-MAY-2018	PARCEL NO. 123-0-00-W

U:\AJA\PROJECTS\ROW\Ridgeland_ROW\City to County Transfer_2018\123-W.dgn

17-MAY-2018 15:05

Prepared by:
Holmes S. Adams (MS Bar No. 1126)
ADAMS AND REESE LLP
1018 Highland Colony Parkway, Suite 800
Ridgeland, MS 39157
Telephone: 601-353-3234
Facsimile: 601-355-9708

Return to:
Holmes S. Adams (MS Bar No. 1126)
ADAMS AND REESE LLP
1018 Highland Colony Parkway, Suite 800
Ridgeland, MS 39157
Telephone: 601-353-3234
Facsimile: 601-355-9708

Indexing Instructions:

Township 7 North, Range 2 East
SW1/4 of SW1/4 of Section 18

City of Ridgeland
Madison County, Mississippi

GRANTOR:
City of Ridgeland, Mississippi
P. O. Box 217
Ridgeland, MS 39158
Phone: (601) 856-7113

GRANTEE:
Madison County School District
476 Highland Colony Parkway
Ridgeland, MS 39157
(601) 879-3000

SPECIAL WARRANTY DEED

STATE OF MISSISSIPPI)
COUNTY OF MADISON)

SPECIAL WARRANTY DEED

THIS DEED MADE THIS _____ day of _____, 2018, for and in consideration of the sum of Ten Dollars ($10.00) cash in hand paid, and other good and valuable consideration, the receipt and sufficiency all of which are hereby acknowledged, the City of Ridgeland, Mississippi, a body politic (the "Grantor"), pursuant to Mississippi Code Annotated Sections 21-17-1 and 21-19-49 and the findings and order of the Mayor and Board of Aldermen granted at a meeting held on _____, said authorization being found in Minute Book _____ at Page _____ of the records of the City of Ridgeland, Mississippi, does hereby grant, bargain, sell, convey and warrant unto the Madison County School District, a body politic of the State of Mississippi (the "Grantee"), the following described land, improvements, and standing timber thereon lying and being situated in Madison County, Mississippi, to-wit:

Legal Description attached as **EXHIBIT "A"**

Plat of Survey attached as **EXHIBIT "B"**

TOGETHER WITH, all and singular: (a) all improvements located on the Property, if any; (b) all timber, trees, or forest products lying, standing, and otherwise situated on the Property; and (c) any and all rights, benefits, privileges, easements, tenements, hereditaments, appurtenances and interests thereon or in anywise appertaining to the Property not previously reserved by Grantor or Grantor's predecessor in title. The Property, together with the rights and interests set forth in (a) through (c) inclusive, are herein collectively referred to as the "Premises".

TO HAVE AND TO HOLD the same unto said Grantee and Grantee's successors and assigns, forever; and for the consideration aforesaid, said Grantor does hereby, for itself, it's successors and assigns, covenant with the said Grantee and Grantee's successors and assigns, that it shall, forever warrant and defend the title thereto unto said Grantee and Grantee's successors and assigns, against the lawful claims of all persons whatsoever claiming or to claim the same or any part thereof, subject only to the Permitted Exceptions on **EXHIBIT "C"**.

The Grantor hereby retains all mineral rights it owns, if any, together with the right of ingress and egress to remove same.

The property is currently exempt from taxation. Grantee assumes all future taxes, if any.

The Property conveyed herein constitutes no part of the homestead of Grantor.

IN WITNESS WHEREOF, Grantor has executed this instrument on the date of its acknowledgment below, but shall be dated effective as of the day and year first hereinabove written.

City of Ridgeland, Mississippi,
a body politic

By: _____
Gene F. McGee, Mayor

ATTEST:

_____

By: _____, City Clerk

STATE OF MISSISSIPPI
COUNTY OF MADISON

PERSONALLY APPEARED BEFORE ME, the undersigned authority in and for the jurisdiction aforesaid, the within named GENE F. MCGEE and _____, who acknowledged that they are the Mayor and City Clerk respectively of the City of Ridgeland, Mississippi and on behalf of said municipality they did sign, seal and deliver the above and foregoing instrument of writing on the day and year therein mentioned, having first been duly authorized to do so.

GIVEN UNDER MY HAND AND OFFICIAL SEAL, this the _____ day of _____, 2018.

_____
NOTARY PUBLIC

My Commission Expires:

_____

(SEAL)

51341946

Exhibit "A"

City of Ridgeland
123-0-00-W
Madison County, MS
Colony Park Boulevard
100486-203000 [ACNH-9204-00(003)]

The following description is based on the Mississippi State Plane Coordinate System, West Zone, NAD 83 (93) grid values, U.S. Survey Feet, using a combined factor of 0.999941015 and a convergence angle of plus (+) 00°06'31" as developed by Michael Baker International for the City of Ridgeland Colony Park Boulevard Project. It is the intent of this description to convey the Grantor's property lying between the New southern right-of-way line of Colony Park Boulevard and the current (2018) Northern property line of the Madison County School District property and being more particularly described as follows:

COMMENCING at found 1-1/2" x 1/2" iron bar representing the Northeast corner of Section 18, Township 7 North, Range 2 East, Madison County, Mississippi, having grid coordinates N=1,075,891.401, E=2,361,306.128 based on the above referenced coordinate system; run thence South 46°36'34" West a distance of 6001.68 feet to the New Colony Park Boulevard Project Centerline at Station 71+15.00 as shown on the Appraisal Maps for the above referenced Project, also being referenced to as Mississippi Department of Transportation Project No. 100486-203000 [ACNH-9204-00(003)]; thence run South 00°05'03" East a distance of 103.85 feet to a found 3/4" iron rebar in the southern right-of-way line for said Colony Park Boulevard at Project Centerline Station 71+15.00, same being at the Grantor's northeasterly property corner and also being hereby designated as Point "A-8A" for future reference and being the **Point of Beginning** for the parcel of land herein conveyed:

From said **Point of Beginning** run along the Grantor's eastern property line South 00°05'03" East a distance of 93.00 feet to a found 3/4" rebar in the Grantor's southern property line, and being 196.85 feet southerly of, as measured perpendicular to, said Colony Park Boulevard Project Centerline at Station 71+15.00;

Thence run along the Grantor's said southern property line South 89°52'22" West a distance of 714.74 feet to a set 5/8" iron rebar at the intersection with the present southerly right of way line of Colony Park Boulevard;

Thence North 48°41'36" East a distance 125.22 feet along said present southerly right of way line of Colony Park Boulevard to a set 5/8" iron rebar in the Grantor's northern property line;
Thence along the Grantor's said northerly property line North 89°52'21" East a distance of 116.71 feet to a set 5/8" iron rebar;

Thence North 00°57'31" West a distance of 5.89 feet to a found 3/4" iron rebar in the present southern right of way line of said Colony Park Boulevard, being 108.89 feet southerly of, as measured perpendicular to, said Colony Park Boulevard Project Centerline at Station 66+11.07 and being hereby designated as Point "A-2" for future reference;

Thence along said present southern right of way line of said Colony Park Boulevard, same being the Grantor's northerly property line, North 89°20'35" East a distance of 503.96 feet to said **Point of Beginning.**

The above described parcel of land contains 1.3586 acres (59,181 sq. ft.), more or less, and being situated in and a part of the Southwest Quarter (SW1/4) of the Southwest Quarter (SW1/4) of Section 18, Township 7 North, Range 2 East, City of Ridgeland, Madison County, Mississippi and also being situated in and a part of Lot 3 and Lot 4, Block 6 of the 1896 Highland Colony Subdivision, and

Together with any and all abutter's rights of access, if any, in, to, over, on and across the above described parcel of land between Point "A-2" and Point "A-8A" as designated above and as shown on the plans for said Colony Park Boulevard Project.

JAMES M. TYLER
REGISTERED PROFESSIONAL
Land Surveyor
P.L.S. 02697
STATE OF MISSISSIPPI

James M. Tyler, P.L.S. No. 02697

PREPARED BY:

MICHAEL BAKER, JR., INC.
310 New Pointe Drive
Ridgeland, Mississippi 39157
Phone (601) 607-8700

CLASSIFICATION

This Survey meets the minimum requirements of the standards for Land Surveyors in Mississippi for Class "B" Surveys as adopted by the State Board of Registration For Professional Engineers & Land Surveyors.

Date Of Field Survey: May 15, 2018

REFERENCE MATERIAL:

1). DB. 3412 at PG. 594 & DB. 3144 at Pg. 10.
2). MDOT ROW Appraisal Map, State Project 100486-203000.
3). Madison County Tax Maps, Quad Maps, GLO Plats and Field Notes.
4). HIGHLAND COLONY PLAT by J.P. George dated March, 1896. Plat Book 1 at Pg. 29.

EXHIBIT "B"

0 200 400 600
SCALE IN FEET

N

⦿ Denotes Found ¾" X 30" Iron Rebar
⊙ Denotes Set ⅝" X 18" Iron Rebar

Line Table

Name	Length	Direction
L1	93.00	S 00°05'03" E
L2	125.22	N 48°41'36" E
L3	116.71	N 89°52'21" E
L4	5.89	N 00°57'31" W

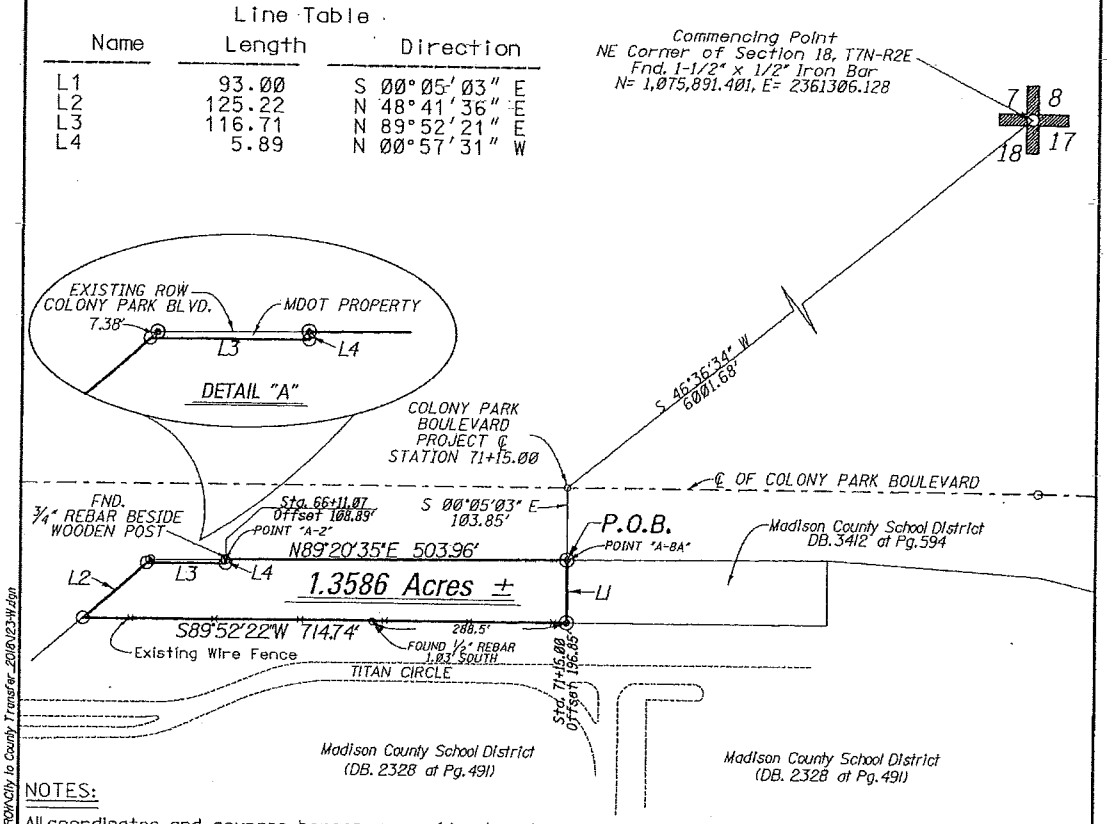

NOTES:

All coordinates and courses hereon are grid values, based on Mississippi State Plane Coordinate System, West Zone, NAD83 (93), using a combined factor of 0.999941015 and a convergence angle of plus (+) 00°06'31". Bearings are grid North based on said coordinate system and were derived by GPS Survey. Tied to MDOT GPS Monument Station "KP03" having SPC of, N= 1080291.61, E= 2357991.22.

SW1/4 of SW1/4	PLAT OF SURVEY	CITY OF RIDGELAND PARCEL TRANSFER TO MADISON COUNTY SCHOOL DISTRICT
SECTION 18, T7N-R2E	COLONY PARK BOULEVARD	PROJECT: CITY OF RIDGELAND, MS. COLONY PARK BOULEVARD
COUNTY: MADISON	DATE: 17-MAY-2018	PARCEL NO. 123-0-00-W

U:\AJAX\PROJECTS\ROW\Ridgeland_ROW\City to County Transfer_2016\123-W.dgn

17-MAY-2018 15:05

Exhibit "C"

(Permitted Exceptions)

The special warranty of this conveyance is subject to the following Permitted Exceptions:

(1) Any prior reservation or conveyance of minerals of every kind and character, including, but not limited to, oil, gas, and related minerals in, on and under the Property, together with release of damages pertaining thereto and ingress and egress and related rights pertaining to the mineral development and production thereon;
(2) Rights-of-way, easements, zoning ordinances and restrictive covenants of record;
(3) Matters revealed by attached survey, Exhibit "B";
(4) Lack of access to and from any of the Premises; and
(5) Any portion of the Premises which has been created by artificial means or accreted to any such portion so created, navigational servitudes and riparian or other water rights arising from a crossing by, being bound by, or otherwise affected by a river, stream, or other body of water.

LICENSES: THRU ZZZZZZZZZZ SORTED BY: NAME PAYMENT DATES: 4/01/2018 TO 4/30/2018

LICENSE	PERIOD	CODE	ISSUED TO	FEE	PENALTY	TAX	INTEREST	TOTAL PAID
				========== PAYMENT DISTRIBUTION ==========				
0010736	4/01/18- 3/31/19	27-17-009	CLAY LAW FIRM, THE	20.00CR	.00	.00	.00	20.00CR
0010717	4/01/18- 3/31/19	27-17-365	LBI DBAJACKSON FISH AND	40.00CR	4.40CR	.00	.00	44.40CR
9162	6/01/18- 5/31/19	27-17-009	220 MINI STORAGE	20.00CR	.00	.00	.00	20.00CR
9897	6/01/18- 5/31/19	27-17-009	A X A ADVISORS LLC	36.00CR	.00	.00	.00	36.00CR
0011758	11/01/17-10/31/18	27-17-009	ACOSTA	30.00CR	4.80CR	.00	.00	34.80CR
9810	4/01/18- 3/31/19	27-17-365	ACOUSTICS INC	105.00CR	.00	.00	.00	105.00CR
0010856	5/01/18- 4/30/19	27-17-009	AGF ENTERPRISE LLC	20.00CR	.00	.00	.00	20.00CR
9165	6/01/18- 5/31/19	27-17-365	AIRBRUSH CITI	20.00CR	.00	.00	.00	20.00CR
10297	5/01/18- 4/30/19	27-17-009	ANJOU RESTAURANT	99.00CR	.00	.00	.00	99.00CR
9371	4/01/18- 3/31/19	27-17-365	ANN TAYLOR RETAIL INC.	40.00CR	.00	.00	.00	40.00CR
10059	5/01/18- 4/30/19	27-17-009	ANOTHER BROKEN EGG CAFE;R	30.00CR	.00	.00	.00	30.00CR
0010523	12/01/17-11/30/18	27-17-365	ANTHROPOLOGIE, INC	200.00CR	30.00CR	.00	.00	230.00CR
9608	5/01/18- 4/30/19	27-17-009	AQUA THE DAY SPA	150.00CR	.00	.00	.00	150.00CR
0012099	4/01/18- 3/31/19	27-17-365	AUTO INNOVATION LLC	300.00CR	.00	.00	.00	300.00CR
0011548	1/01/18-12/31/18	27-17-009	BALL MECHANICAL, INC.	20.00CR	2.80CR	.00	.00	22.80CR
8788	1/01/18-12/31/18	27-17-365	BALLINS LTD	40.00CR	.00	.00	.00	40.00CR
9372	4/01/18- 3/31/19	27-17-365	BARNES & NOBLE	800.00CR	.00	.00	.00	800.00CR
9607	5/01/18- 4/30/19	27-17-009	BARNETTES SALON	39.00CR	.00	.00	.00	39.00CR
0011217	1/01/18-12/31/18	27-17-009	BATES FLOOR CARE SERVICES	20.00CR	2.80CR	.00	.00	22.80CR
0011047	5/01/18- 4/30/19	27-17-009	BEE TEAM FLOWERS LLC	20.00CR	.00	.00	.00	20.00CR
0010728	4/01/18- 3/31/19	27-17-009	BENCHMARK TITLE LLC	20.00CR	.00	.00	.00	20.00CR
5625	5/01/18- 4/30/19	27-17-009	BERGLAND WEALTH MANAGEMEN	20.00CR	.00	.00	.00	20.00CR
6049	4/01/18- 3/31/19	27-17-009	BILLS VENDORS	30.00CR	.00	.00	.00	30.00CR
0011568	4/01/18- 3/31/19	27-17-009	BODY KNEADS MASSAGE THRPY	20.00CR	.00	.00	.00	20.00CR
0010779	5/01/18- 4/30/19	27-17-009	BRIARHILL MANAGEMENT	51.00CR	.00	.00	.00	51.00CR
9389	5/01/18- 4/30/19	27-17-009	CAPITAL HOLDINGS LLC	20.00CR	.00	.00	.00	20.00CR
0011846	3/01/18- 2/28/19	27-17-009	CARE FIRST HOME CARE AGCY	20.00CR	2.40CR	.00	.00	22.40CR
9843	4/01/18- 3/31/19	27-17-009	CARSON CONSULTING SERVICE	20.00CR	2.20CR	.00	.00	22.20CR
8936	6/01/18- 5/31/19	27-17-009	CAZADORES MEXICAN BAR & G	66.00CR	.00	.00	.00	66.00CR
8892	5/01/18- 4/30/19	27-17-365	CHARLOTTE RUSSE #377	62.50CR	.00	.00	.00	62.50CR
9271	4/01/18- 3/31/19	27-17-009	CHATEAU RIDGELAND	150.00CR	16.50CR	.00	.00	166.50CR
0010766	5/01/18- 4/30/19	27-17-009	CHRIS ROSSON DBA CHICK FI	20.00CR	.00	.00	.00	20.00CR
8012	4/01/18- 3/31/19	27-17-009	COLORSTONE LLC	20.00CR	26.60CR	.00	.00	46.60CR
10026	2/01/18- 1/31/19	27-17-365	COMIC COMANDER	20.00CR	2.60CR	.00	.00	22.60CR
0011883	4/27/18- 4/26/19	27-17-009	COMPENSATION INS SERVICES	20.00CR	.00	.00	.00	20.00CR
0011024	4/01/18- 3/31/19	27-17-009	CONTRACTORS INC	20.00CR	.00	.00	.00	20.00CR
0012124	4/20/18- 4/20/19	27-17-009	COOKIE STORE, THE	20.00CR	.00	.00	.00	20.00CR
0010829	8/01/17- 7/31/18	27-17-365	CRISP CLOTHING	20.00CR	3.60CR	.00	.00	23.60CR
0011284	3/01/18- 2/28/19	27-17-009	CROSSFIT FOSSIL FUEL	20.00CR	2.20CR	.00	.00	22.20CR
0012123	4/14/18- 4/14/19	27-17-009	CRUNCH RIDGELAND	30.00CR	.00	.00	.00	30.00CR
0012102	4/03/18- 4/03/19	27-17-365	CUSTOM LOOK	20.00CR	.00	.00	.00	20.00CR
0012122	4/26/18- 4/26/19	27-17-009	CUSTOM POOL CARE LLC	20.00CR	.00	.00	.00	20.00CR
0012115	5/14/18- 5/14/19	27-17-009	CUT CREATORS	20.00CR	.00	.00	.00	20.00CR
0011169	11/01/17-10/31/18	27-17-009	CUT-N-UP	20.00CR	3.20CR	.00	.00	23.20CR
0011897	5/10/18- 5/09/19	27-17-009	DAIRY QUEEN GRILL & CHILL	30.00CR	.00	.00	.00	30.00CR
9846	5/01/18- 4/30/19	27-17-009	DAVID L VALENTINE ATTORNE	20.00CR	.00	.00	.00	20.00CR

LICENSES: THRU ZZZZZZZZZZ SORTED BY: NAME PAYMENT DATES: 4/01/2018 TO 4/30/2018

LICENSE	PERIOD	CODE	ISSUED TO	FEE	PENALTY	TAX	INTEREST	TOTAL PAID
				========== PAYMENT DISTRIBUTION ==========				
0010711	4/01/18- 3/31/19	27-17-009	DAVIS ENTERPRISE	20.00CR	.00	.00	.00	20.00CR
10222	1/01/17-12/31/17	27-17-009	DILLS LOCK & KEY	20.00CR	5.00CR	.00	.00	25.00CR
10222	1/01/18-12/31/18	27-17-009	DILLS LOCK & KEY	20.00CR	2.80CR	.00	.00	22.80CR
10272	4/01/18- 3/31/19	27-17-009	DITECH FINANCIAL LLC	20.00CR	.00	.00	.00	20.00CR
0011025	4/01/18- 3/31/19	27-17-365	DIVANO FURNITURE	40.00CR	4.40CR	.00	.00	44.40CR
0011872	4/18/18- 4/17/19	27-17-009	DOE'S EAT PLACE OF RIDGEL	30.00CR	.00	.00	.00	30.00CR
9614	5/01/18- 4/30/19	27-17-009	DOG SPOT PET GROOMING LLC	20.00CR	.00	.00	.00	20.00CR
0012098	3/28/18- 3/28/19	27-17-365	DOLLAR GENERAL STORE 1849	62.50CR	.00	.00	.00	62.50CR
9837	5/01/18- 4/30/19	27-17-009	DUNBAR LAW OFFICE P C	20.00CR	.00	.00	.00	20.00CR
0010606	6/01/18- 5/31/19	27-17-009	DURANGO OPERATING, LLC	20.00CR	.00	.00	.00	20.00CR
0010572	6/01/18- 5/31/19	27-17-009	EASTSIDE SALON	33.00CR	.00	.00	.00	33.00CR
0011322	5/01/18- 4/30/19	27-17-009	EL SABOR LATIN CUISINE IN	20.00CR	.00	.00	.00	20.00CR
0011903	5/16/18- 5/15/19	27-17-009	ELIOR NORTH AMERICA INC.	150.00CR	.00	.00	.00	150.00CR
0011482	1/01/18-12/31/18	27-17-009	ELITE BARBER & BEAUTY SAL	20.00CR	2.80CR	.00	.00	22.80CR
9337	3/01/18- 2/28/19	27-17-009	ELYS RESTAURANT & BAR LLC	.00	3.60CR	.00	.00	3.60CR
8514	5/01/18- 4/30/19	27-17-009	EQUITY MORTGAGE CORPORATI	20.00CR	.00	.00	.00	20.00CR
9645	5/01/18- 4/30/19	27-17-365	ETHAN ALLEN DESIGN CENTER	340.00CR	.00	.00	.00	340.00CR
9104	3/01/18- 2/28/19	27-17-009	EVERSOLE GROUP LLC, THE	30.00CR	3.30CR	.00	.00	33.30CR
9857	5/01/18- 4/30/19	27-17-365	EVES SHOE STORE	20.00CR	.00	.00	.00	20.00CR
0011473	12/10/17-12/09/18	27-17-365	FAT CAT ART CAFE	20.00CR	2.40CR	.00	.00	22.40CR
9649	5/01/18- 4/30/19	27-17-009	FIELD OF DREAMS CONCESSIO	20.00CR	.00	.00	.00	20.00CR
0011809	2/07/18- 2/06/19	27-17-009	FOOD SALES EAST MISSISSIP	20.00CR	2.40CR	.00	.00	22.40CR
0010719	4/01/18- 3/31/19	27-17-009	FRANK A. PERKINS	20.00CR	2.00CR	.00	.00	22.00CR
10137	8/01/17- 7/31/18	27-17-009	GABLES APARTMENTS, THE	30.00CR	5.70CR	.00	.00	35.70CR
8103	5/01/18- 4/30/19	27-17-009	GAELERIA SALON AND GIFTS,	20.00CR	.00	.00	.00	20.00CR
0012097	4/01/18- 3/31/19	27-17-009	GAME CHANGER CONCESSIONS	20.00CR	.00	.00	.00	20.00CR
0011324	5/13/17- 5/12/18	27-17-365	GAME X CHANGE	75.00CR	15.75CR	.00	.00	90.75CR
0011324	5/13/18- 5/12/19	27-17-365	GAME X CHANGE	75.00CR	.00	.00	.00	75.00CR
7332	5/01/18- 4/30/19	27-17-365	GATEWAY TIRE & SERVICE CE	50.00CR	.00	.00	.00	50.00CR
0011272	3/01/18- 2/28/19	27-17-009	GILL LADNER & PRIEST PLLC	20.00CR	2.20CR	.00	.00	22.20CR
10237	2/01/18- 1/31/19	27-17-009	GLAMOUR "U" HAIR DESIGNS	20.00CR	2.60CR	.00	.00	22.60CR
0010792	6/01/18- 5/31/19	27-17-009	GLS BUILDERS INC.	20.00CR	.00	.00	.00	20.00CR
0012100	3/31/18- 3/31/19	27-17-365	GOWDY AUTOPLEX	300.00CR	.00	.00	.00	300.00CR
0010602	6/01/18- 5/31/19	27-17-009	GRANTHAM POOLE CPAS	150.00CR	.00	.00	.00	150.00CR
10338	7/01/17- 6/30/18	27-17-365	GREEN OAK FLORIST	20.00CR	2.60CR	.00	.00	22.60CR
10338	7/01/18- 6/30/19	27-17-365	GREEN OAK FLORIST	20.00CR	.00	.00	.00	20.00CR
7722	5/01/18- 4/30/19	27-17-009	GUSSIO REALTY INC	20.00CR	28.80CR	.00	.00	48.80CR
9194	4/01/18- 3/31/19	27-17-009	H F C FUNDING CORPORATION	30.00CR	.00	.00	.00	30.00CR
8315	6/01/18- 5/31/19	27-17-009	HAIRWORKS BY MYRTIS	20.00CR	.00	.00	.00	20.00CR
0011052	5/01/18- 4/30/19	27-17-365	HARBOR FREIGHT TOOLS #508	200.00CR	.00	.00	.00	200.00CR
0011373	6/01/17- 5/31/18	27-27-301	HEALTHY MAGNOLIA VENDING	20.00CR	4.00CR	.00	.00	24.00CR
10313	6/01/17- 5/31/18	27-17-365	HEMLINE MS INC	50.00CR	10.50CR	.00	.00	60.50CR
10313	6/01/18- 5/31/19	27-17-365	HEMLINE MS INC	40.00CR	.00	.00	.00	40.00CR
8185	12/01/17-11/30/18	27-17-009	HOME AWAY FROM HOME DAYCA	20.00CR	3.00CR	.00	.00	23.00CR
0011890	4/28/18- 4/27/19	27-17-009	HOMEWOOD SUITES	54.00CR	.00	.00	.00	54.00CR
0010759	3/01/18- 2/28/19	27-17-009	HUGHES & ASSOCIATES	30.00CR	.00	.00	.00	30.00CR

LICENSES: THRU ZZZZZZZZZZ SORTED BY: NAME PAYMENT DATES: 4/01/2018 TO 4/30/2018

LICENSE	PERIOD	CODE	ISSUED TO	FEE	PENALTY	TAX	INTEREST	TOTAL PAID
				========== PAYMENT DISTRIBUTION ==========				
8177	9/01/17- 8/31/18	27-17-009	IMAGES LLC	30.00CR	5.40CR	.00	.00	35.40CR
0011861	3/31/18- 3/30/19	27-17-009	IMO US SOUTH LLC	20.00CR	2.20CR	.00	.00	22.20CR
0012116	4/02/18- 4/02/19	27-17-009	INTERNATIONAL FIRE PROTEC	30.00CR	.00	.00	.00	30.00CR
0012119	4/30/18- 4/30/19	27-17-009	J A SOSA ENTERPRISE, INC.	20.00CR	.00	.00	.00	20.00CR
10008	1/01/18-12/31/18	27-17-009	JOLLY ORTHODONTICS	30.00CR	3.90CR	.00	.00	33.90CR
0012118	4/12/18- 4/12/19	27-17-009	KALE ME CRAZY	20.00CR	.00	.00	.00	20.00CR
0011334	6/01/18- 5/31/19	27-17-009	KEY IMPACT SALES & SYSTEM	20.00CR	4.20CR	.00	.00	24.20CR
0011061	6/01/18- 5/31/19	27-17-009	KEYTRUST PROPERTIES PAULA	20.00CR	.00	.00	.00	20.00CR
0011305	5/01/18- 4/30/19	27-17-009	KFC	30.00CR	.00	.00	.00	30.00CR
6022	2/01/18- 1/31/19	27-17-365	KIDS FOOT LOCKER #6769	.00	8.13CR	.00	.00	8.13CR
5770	2/01/18- 1/31/19	27-17-009	KITCHEN KREATORS LIMITED	.00	3.57CR	.00	.00	3.57CR
9409	6/01/18- 5/31/19	27-17-009	KYOTO JAPANESE STEAK HOUS	30.00CR	.00	.00	.00	30.00CR
9169	6/01/18- 5/31/19	27-17-009	L W PROPERTIES LLC	20.00CR	.00	.00	.00	20.00CR
0010840	8/01/17- 7/31/18	27-17-009	LADY QUEST FITNESS CLUB L	20.00CR	3.80CR	.00	.00	23.80CR
0010840	8/01/18- 7/31/19	27-17-009	LADY QUEST FITNESS CLUB L	20.00CR	.00	.00	.00	20.00CR
0011672	7/20/17- 7/19/18	27-17-009	LAS PALMAS MEXICAN GRILL	30.00CR	6.00CR	.00	.00	36.00CR
9626	6/01/18- 5/31/19	27-17-009	LAW INVESTIGATIVE GROUP L	20.00CR	.00	.00	.00	20.00CR
9805	12/01/16-11/30/17	27-17-009	LAW OFFICES OF JOHN D MOO	20.00CR	3.90CR	.00	.00	23.90CR
9805	12/01/17-11/30/18	27-17-009	LAW OFFICES OF JOHN D MOO	20.00CR	3.90CR	.00	.00	23.90CR
0010970	2/01/18- 1/31/19	27-17-009	LETS GET ORGANIZED	20.00CR	2.40CR	.00	.00	22.40CR
8256	6/01/17- 5/31/18	27-17-009	LEXINGTON APARTMENT HOMES	30.00CR	6.30CR	.00	.00	36.30CR
10293	5/01/18- 4/30/19	27-17-009	LITTLE TOKYO #2	60.00CR	.00	.00	.00	60.00CR
0012117	3/26/18- 3/26/19	27-17-365	LITTLE VILLIAGE CHILDRENS	20.00CR	.00	.00	.00	20.00CR
8459	5/01/18- 4/30/19	27-17-009	LOGANS ROADHOUSE RESTAURA	150.00CR	.00	.00	.00	150.00CR
0010623	2/01/18- 1/31/19	27-17-009	M.DEVIS WHITT PLLC	.00	2.60CR	.00	.00	2.60CR
0011618	6/01/18- 5/31/19	27-17-009	MADISON COUNTY HERALD	20.00CR	.00	.00	.00	20.00CR
6210	6/01/18- 5/31/19	27-17-009	MADISON RIDGELAND HEATING	20.00CR	.00	.00	.00	20.00CR
7987	8/01/17- 7/31/18	27-17-009	MALEY SWIM SCHOOL	20.00CR	3.80CR	.00	.00	23.80CR
7987	8/01/18- 7/31/19	27-17-009	MALEY SWIM SCHOOL	20.00CR	.00	.00	.00	20.00CR
6903	5/01/18- 4/30/19	27-17-365	MARKETING AGENTS SOUTH IN	32.50CR	.00	.00	.00	32.50CR
6873	6/01/18- 5/31/19	27-17-009	MARKOW WALKER REEVES ANDE	129.00CR	.00	.00	.00	129.00CR
10328	6/01/18- 5/31/19	27-17-365	MAZDA OF RIDGELAND	62.50CR	.00	.00	.00	62.50CR
0012120	4/30/18- 4/30/19	27-17-009	MCGLINCHEY STAFFORD PLLC	30.00CR	.00	.00	.00	30.00CR
6679	5/01/18- 4/30/19	27-17-365	MCGRAW RENTAL & SUPPLY CO	150.00CR	.00	.00	.00	150.00CR
0011815	2/21/18- 2/20/19	27-17-009	MCKENZIE CPA, PLLC	20.00CR	2.20CR	.00	.00	22.20CR
10262	3/01/18- 2/28/19	27-17-365	MEDWORX	30.00CR	3.60CR	.00	.00	33.60CR
6851	4/01/18- 3/31/19	27-17-009	MILLET STUDIO & GALLERY	20.00CR	2.20CR	.00	.00	22.20CR
6901	6/01/18- 5/31/19	27-17-009	MISSISSIPPI RAINBOW PRINT	20.00CR	.00	.00	.00	20.00CR
0011580	4/14/18- 4/13/19	27-17-009	MISTER CAR WASH	30.00CR	.00	.00	.00	30.00CR
0010757	5/01/18- 4/30/19	27-17-009	MOON-HINES-TIGRETT OPERAT	30.00CR	.00	.00	.00	30.00CR
8676	5/01/18- 4/30/19	27-17-365	NEBLETTS FRAME OUTLETS IN	25.00CR	.00	.00	.00	25.00CR
10327	6/01/18- 5/31/19	27-17-009	NELL WYATT REAL ESTATE	45.00CR	.00	.00	.00	45.00CR
0010497	12/01/17-11/30/18	27-17-365	NEW RUE 21 LLC STORE #753	50.00CR	.00	.00	.00	50.00CR
10206	12/01/17-11/30/18	27-17-009	NOGGINS	30.00CR	4.50CR	.00	.00	34.50CR
0011332	6/01/18- 5/31/19	27-17-009	NORTHEAST DENTAL	30.00CR	.00	.00	.00	30.00CR
0011428	6/01/18- 5/31/19	27-17-365	NUYOU, LLC	75.00CR	.00	.00	.00	75.00CR

LICENSES: THRU ZZZZZZZZZZ SORTED BY: NAME PAYMENT DATES: 4/01/2018 TO 4/30/2018

LICENSE	PERIOD	CODE	ISSUED TO	PAYMENT DISTRIBUTION FEE	PENALTY	TAX	INTEREST	TOTAL PAID
0010748	1/01/18-12/31/18	27-17-009	OAKBROOK LLC	30.00CR	4.20CR	.00	.00	34.20CR
9835	5/01/18- 4/30/19	27-17-009	OBERT LAW GROUP P A	20.00CR	.00	.00	.00	20.00CR
0010554	12/01/17-11/30/18	27-17-009	OLE KARZ AUTO- REPAIR	20.00CR	3.00CR	.00	.00	23.00CR
0011882	5/01/18- 4/30/19	27-17-365	ONCE UPON A CHILD	32.50CR	.00	.00	.00	32.50CR
6958	2/01/18- 1/31/19	27-17-009	PACE & ASSOCIATES	20.00CR	4.00CR	.00	.00	24.00CR
8636	4/01/18- 3/31/19	27-17-365	PALM BEACH TAN	20.00CR	3.30CR	.00	.00	23.30CR
0011849	2/01/18- 1/31/19	27-17-365	PARFUME WORLD	20.00CR	2.60CR	.00	.00	22.60CR
6970	4/01/18- 3/31/19	27-17-365	PARTY CITY	150.00CR	.00	.00	.00	150.00CR
0011301	4/13/18- 4/12/19	27-17-009	PATHWAYS COUNSELING PLLC	20.00CR	.00	.00	.00	20.00CR
0012110	3/02/18- 3/02/19	27-17-009	PERSONALIZED WELLNESS	20.00CR	2.20CR	.00	.00	22.20CR
9116	4/01/18- 3/31/19	27-17-009	PLAINS MARKETING L P	20.00CR	.00	.00	.00	20.00CR
0011521	3/01/18- 2/28/19	27-17-365	PLATO'S CLOSET RIDGELAND	50.00CR	6.00CR	.00	.00	56.00CR
0012103	10/01/17- 9/30/18	27-17-009	PPM CONSULTANTS INC.	30.00CR	4.50CR	.00	.00	34.50CR
0011037	5/01/18- 4/30/19	27-17-009	PRIORITY ONE BANK	30.00CR	.00	.00	.00	30.00CR
0011171	11/01/17-10/31/18	27-17-009	PRISSY PAINTBRUSH STUDIOS	20.00CR	3.20CR	.00	.00	23.20CR
0011222	3/01/16- 2/28/17	27-17-365	PRO TECH DOOR & WINDOW	20.00CR	2.40CR	.00	.00	22.40CR
0011222	3/01/17- 2/28/18	27-17-365	PRO TECH DOOR & WINDOW	20.00CR	4.60CR	.00	.00	24.60CR
0011222	3/01/18- 2/28/19	27-17-365	PRO TECH DOOR & WINDOW	20.00CR	6.80CR	.00	.00	26.80CR
7446	8/01/17- 7/31/18	27-17-009	PROPERTY TAX ASSOCIATES I	30.00CR	6.00CR	.00	.00	36.00CR
10054	4/01/18- 3/31/19	27-17-009	PURE BARRE	20.00CR	.00	.00	.00	20.00CR
0010559	1/01/18-12/31/18	27-17-009	RAYMOND JAMES & ASSOCIATE	.00	5.28CR	.00	.00	5.28CR
6898	4/01/18- 3/31/19	27-17-365	RAYS BED BATH WINDOW	150.00CR	.00	.00	.00	150.00CR
0012112	3/26/18- 3/26/19	27-17-009	REBOUND POWER BOUNCE	20.00CR	.00	.00	.00	20.00CR
0011887	4/28/18- 4/27/19	27-17-009	RESIDENCE INN	36.00CR	.00	.00	.00	36.00CR
0011802	6/01/18- 5/31/19	27-17-009	RESTORATION TAX CONSULTAN	20.00CR	.00	.00	.00	20.00CR
0010978	3/01/18- 2/28/19	27-17-365	RIDGELAND CHEVRON	20.00CR	3.00CR	.00	.00	23.00CR
9592	8/01/17- 7/31/18	27-17-009	RIDGELAND EYECARE CENTER	30.00CR	5.70CR	.00	.00	35.70CR
6875	6/01/18- 5/31/19	27-17-009	RIDGELAND MINI STORAGE	20.00CR	.00	.00	.00	20.00CR
0011623	6/01/18- 5/31/19	27-17-365	RIDGELAND SERVICE CENTER	20.00CR	.00	.00	.00	20.00CR
6895	6/01/18- 5/31/19	27-17-009	RIDGELAND TAEKWONDO	20.00CR	.00	.00	.00	20.00CR
0010615	6/01/18- 5/31/19	27-17-009	ROLLINS LAW FIRM	30.00CR	.00	.00	.00	30.00CR
8657	5/01/18- 4/30/19	27-17-009	ROSE NAILS OF RIDGELAND L	20.00CR	.00	.00	.00	20.00CR
0011383	8/01/17- 7/31/18	27-17-365	ROW 10 BABY	20.00CR	3.80CR	.00	.00	23.80CR
0011297	5/01/18- 4/30/19	27-17-009	ROY ANDERSON CORP	30.00CR	.00	.00	.00	30.00CR
0011626	5/16/18- 5/15/19	27-17-009	S&R DEVELOPMENT, INC.	30.00CR	.00	.00	.00	30.00CR
6532	4/01/18- 3/31/19	27-17-009	SAL AND PHILS RESTAURANT	30.00CR	3.30CR	.00	.00	33.30CR
8336	6/01/18- 5/31/19	27-17-009	SARAS NAILS INC	20.00CR	.00	.00	.00	20.00CR
8378	5/01/18- 4/30/19	27-17-009	SECORP INDUSTRIES PARTNER	42.00CR	.00	.00	.00	42.00CR
0012111	4/16/18- 4/16/19	27-17-009	SERVICE KLEENING	20.00CR	.00	.00	.00	20.00CR
0011867	4/01/18- 3/31/19	27-17-009	SHADY'S SNO SHACK	20.00CR	.00	.00	.00	20.00CR
0011275	4/01/18- 3/31/19	27-17-009	SHAPE UPS LLC	20.00CR	2.20CR	.00	.00	22.20CR
0011538	3/14/18- 3/13/19	27-17-365	SHAYNA'S BOUTIQUE	25.00CR	3.75CR	.00	.00	28.75CR
9157	5/01/18- 4/30/19	27-17-009	SIMMONS LAW GROUP P A	30.00CR	.00	.00	.00	30.00CR
0011264	2/01/18- 1/31/19	27-17-009	SIZZLINGCAESARSDBALITTLEC	20.00CR	2.60CR	.00	.00	22.60CR
0011843	3/13/18- 3/12/19	27-17-009	SKYLARK PROPERTIES, LLC	20.00CR	2.20CR	.00	.00	22.20CR
0011843	3/13/19- 3/12/20	27-17-009	SKYLARK PROPERTIES, LLC	20.00CR	2.60CR	.00	.00	22.60CR

LICENSES: THRU ZZZZZZZZZZ SORTED BY: NAME PAYMENT DATES: 4/01/2018 TO 4/30/2018

LICENSE	PERIOD	CODE	ISSUED TO	FEE	PENALTY	TAX	INTEREST	TOTAL PAID
				========== PAYMENT DISTRIBUTION ==========				
7334	5/01/18- 4/30/19	27-17-009	SLEDGES WRECKER	20.00CR	.00	.00	.00	20.00CR
10305	5/01/18- 4/30/19	27-17-365	SMITH MARINE	25.00CR	.00	.00	.00	25.00CR
0010841	8/01/17- 7/31/18	27-17-009	SMOOTHIE Q FACTORY	20.00CR	3.80CR	.00	.00	23.80CR
0011321	5/01/18- 4/30/19	27-17-009	SOUTHERN IMPORTS INC	20.00CR	.00	.00	.00	20.00CR
0012105	5/01/17- 5/01/18	27-17-365	SPRINT BY BRIGHTSTAR WIRE	40.00CR	8.80CR	.00	.00	48.80CR
10084	5/01/18- 4/30/19	27-17-009	STAFFMARK INVESTMENT LLC	30.00CR	.00	.00	.00	30.00CR
0011889	4/28/18- 4/27/19	27-17-009	STAYBRIDGE SUITES	33.00CR	.00	.00	.00	33.00CR
0011899	5/17/18- 5/16/19	27-17-009	STEPPING STONES FAMILY DA	20.00CR	.00	.00	.00	20.00CR
9567	3/01/18- 2/28/19	27-17-009	STITCHES OF IMAGINATION	20.00CR	2.40CR	.00	.00	22.40CR
10227	1/01/18-12/31/18	27-17-009	STRAIGHT 8 GARAGE	20.00CR	2.60CR	.00	.00	22.60CR
0011866	4/01/18- 3/31/19	27-17-009	SUPREME LENDING	30.00CR	.00	.00	.00	30.00CR
7361	5/01/18- 4/30/19	27-17-009	SUSAN BURTON REAL ESTATE	20.00CR	.00	.00	.00	20.00CR
10383	5/01/18- 4/30/19	27-17-009	SUZANNE B RUSSELL LPC PLL	20.00CR	.00	.00	.00	20.00CR
0011575	4/01/18- 3/31/19	27-17-009	SWITZERS SALON LLC	30.00CR	3.30CR	.00	.00	33.30CR
8347	5/01/18- 4/30/19	27-17-365	T MOBILE	40.00CR	.00	.00	.00	40.00CR
0011612	5/26/18- 5/25/19	27-17-009	TACO BELL #32313	20.00CR	.00	.00	.00	20.00CR
0010650	5/01/18- 4/30/19	27-17-009	TAX PRO	20.00CR	.00	.00	.00	20.00CR
0010989	3/01/17- 2/28/18	27-17-009	TC MARKETING LLC	20.00CR	4.40CR	.00	.00	24.40CR
0010989	3/01/18- 2/28/19	27-17-009	TC MARKETING LLC	20.00CR	2.20CR	.00	.00	22.20CR
0010727	4/01/18- 3/31/19	27-17-009	THE LITTLE GYM OF JACKSON	20.00CR	2.20CR	.00	.00	22.20CR
0011044	5/01/18- 4/30/19	27-17-365	THE WAREHOUSE MS	20.00CR	.00	.00	.00	20.00CR
7951	5/01/18- 4/30/19	27-17-009	THOMAS F GERRETS JR DMD P	30.00CR	.00	.00	.00	30.00CR
0012121	4/17/18- 4/17/19	27-17-009	THRONE ESTHETICS & SPA	20.00CR	.00	.00	.00	20.00CR
8308	5/01/18- 4/30/19	27-17-009	TIENDA LA GUADALUPE	20.00CR	.00	.00	.00	20.00CR
0011323	6/01/17- 5/31/18	27-17-009	TORSHEL	20.00CR	4.20CR	.00	.00	24.20CR
0011323	6/01/18- 5/31/19	27-17-009	TORSHEL	20.00CR	.00	.00	.00	20.00CR
9143	4/01/18- 3/31/19	27-17-009	TRAVIS PROPERTIES LLC	20.00CR	.00	.00	.00	20.00CR
0010514	11/01/17-10/31/18	27-17-009	TRI COUNTY TRANSPORT LLC	20.00CR	3.20CR	.00	.00	23.20CR
0010672	5/01/18- 4/30/19	27-17-009	TRUSTMARK BANK	30.00CR	.00	.00	.00	30.00CR
8037	12/01/16-11/30/17	27-17-009	ULTIMATE SHOE REPAIR, THE	20.00CR	5.20CR	.00	.00	25.20CR
8037	12/01/17-11/30/18	27-17-009	ULTIMATE SHOE REPAIR, THE	20.00CR	3.00CR	.00	.00	23.00CR
9387	5/01/18- 4/30/19	27-17-365	UNIFORMS	150.00CR	.00	.00	.00	150.00CR
9821	4/01/18- 3/31/19	27-17-009	US MED EQUIP INC	20.00CR	.00	.00	.00	20.00CR
0011352	6/01/18- 5/31/19	27-17-009	WAFFLE HOUSE	60.00CR	.00	.00	.00	60.00CR
6682	5/01/18- 4/30/19	27-17-365	WALMART STORE EAST LP #87	1,840.00CR	.00	.00	.00	1,840.00CR
0012113	4/01/18- 3/31/19	27-17-009	WEBB'S LANDSCAPING, LLC	20.00CR	.00	.00	.00	20.00CR
10294	5/01/18- 4/30/19	27-17-009	WEIGHT WATCHERS	30.00CR	.00	.00	.00	30.00CR
0010634	6/01/18- 5/31/19	27-17-009	WELLS MARBLE & HURST PLLC	150.00CR	.00	.00	.00	150.00CR
0010588	6/01/18- 5/31/19	27-17-009	WILLIAM LARRY LATHAM PA	20.00CR	.00	.00	.00	20.00CR
0011282	4/01/18- 3/31/19	27-17-365	WINDY CITY ENTERPRISES IN	340.00CR	37.40CR	.00	.00	377.40CR
8269	3/01/18- 2/28/19	27-17-009	WORKING SOLUTIONS	20.00CR	2.40CR	.00	.00	22.40CR
0011248	2/01/18- 1/31/19	27-17-009	YSK VERIFICATIONS	20.00CR	2.60CR	.00	.00	22.60CR

RECORD TOTAL	INPUT TOTAL	FEE TOTAL	PENALTY TOTAL	TAX TOTAL	INTEREST TOTAL	GRAND TOTAL
226		11,450.50CR	455.48CR			11,905.98CR

LICENSES: THRU ZZZZZZZZZZ SORTED BY: NAME PAYMENT DATES: 4/01/2018 TO 4/30/2018

** LICENSE CODE TOTALS **

LICENSE CODE	DESCRIPTION		FEE	PENALTY	TAX	INTEREST	TOTAL PAID
			========== PAYMENT DISTRIBUTION ==========				
27-17-009	SERVICE BUSINESSES	173	4,983.00CR	281.05CR			5,264.05CR
27-17-365	RETAIL/WHOLESALE BUSINESSES	56	6,447.50CR	170.43CR			6,617.93CR
27-27-301	VENDING MACHINES	1	20.00CR	4.00CR			24.00CR
		TOTAL	11,450.50CR	455.48CR			11,905.98CR

LICENSES: THRU ZZZZZZZZZZ SORTED BY: NAME PAYMENT DATES: 4/01/2018 TO 4/30/2018

** REPORT CODE TOTALS **

REPORT CODE	DESCRIPTION		FEE	PENALTY	TAX	INTEREST	TOTAL PAID
			========== PAYMENT DISTRIBUTION ==========				
*****	INVALID	82	5,572.00CR	155.10CR			5,727.10CR
236110	Residential Building Construct	1	20.00CR				20.00CR
236220	Commercial and Institutional B	1	30.00CR				30.00CR
238220	Plumbing Heating and Air-Condi	1	30.00CR				30.00CR
238340	Tile and Terrazzo Contractors	1	20.00CR	26.60CR			46.60CR
238990	All Other Specialty Trade Cont	54	1,608.00CR	73.68CR			1,681.68CR
314999	All Other Miscellaneous Textil	1	20.00CR	2.40CR			22.40CR
321918	Other Millwork (including Floo	3	60.00CR	13.80CR			73.80CR
423990	Other Miscellaneous Durable Go	1	62.50CR				62.50CR
441120	Used Car Dealers	2	600.00CR				600.00CR
442110	Furniture Stores	1	40.00CR	4.40CR			44.40CR
444130	Hardware Stores	1	200.00CR				200.00CR
446191	Food (Health) Supplement Store	1	75.00CR				75.00CR
446199	All Other Health and Personal	1	20.00CR				20.00CR
447110	Gasoline Stations with Conveni	1	20.00CR	3.00CR			23.00CR
448120	Women's Clothing Stores	1	25.00CR	3.75CR			28.75CR
448130	Children's and Infants' Clothi	2	40.00CR	3.80CR			43.80CR
448140	Family Clothing Stores	2	250.00CR	30.00CR			280.00CR
451120	Hobby Toy and Game Stores	1	20.00CR	2.40CR			22.40CR
453310	Used Merchandise Stores	2	82.50CR	6.00CR			88.50CR
454210	Vending Machine Operators	1	20.00CR	4.00CR			24.00CR
454390	Other Direct Selling Establish	18	1,192.50CR	67.30CR			1,259.80CR
511110	Newspaper Publishers	1	20.00CR				20.00CR
522310	Mortgage and Nonmortgage Loan	1	30.00CR				30.00CR
531110	Lessors of Residential Buildin	1	30.00CR	4.20CR			34.20CR
531130	Lessors of Miniwarehouses and	1	20.00CR				20.00CR
531210	Offices of Real Estate Agents	1	20.00CR				20.00CR
532230	Video Tape and Disc Rental	2	150.00CR	15.75CR			165.75CR
541110	Offices of Lawyers	4	100.00CR				100.00CR
541211	Offices of Certified Public Ac	1	20.00CR	2.20CR			22.20CR
541219	Other Accounting Services	1	20.00CR				20.00CR
541611	Administrative Management and	1	150.00CR				150.00CR
541613	Marketing Consulting Services	1	20.00CR	2.40CR			22.40CR
541620	Environmental Consulting Servi	1	30.00CR	4.50CR			34.50CR
561720	Janitorial Services	2	40.00CR	2.80CR			42.80CR
561730	Landscaping Services	1	20.00CR				20.00CR
561790	Other Services to Buildings an	1	20.00CR				20.00CR
621111	Offices of Physicians (except	1	20.00CR	2.20CR			22.20CR
621210	Offices of Dentists	1	30.00CR				30.00CR
621610	Home Health Care Services	1	20.00CR	2.40CR			22.40CR
624410	Child Day Care Services	1	20.00CR				20.00CR
713940	Fitness and Recreational Sport	4	90.00CR	3.80CR			93.80CR
721110	Hotels (except Casino Hotels)	3	123.00CR				123.00CR
722211	Limited-Service Restaurants	1	20.00CR	2.60CR			22.60CR
722310	Food Service Contractors	1	20.00CR				20.00CR
722330	Mobile Food Services	1	20.00CR				20.00CR

LICENSES: THRU ZZZZZZZZZZ SORTED BY: NAME PAYMENT DATES: 4/01/2018 TO 4/30/2018

** REPORT CODE TOTALS **

REPORT CODE	DESCRIPTION		FEE	PENALTY	TAX	INTEREST	TOTAL PAID
			========== PAYMENT DISTRIBUTION ==========				
722511	FULL-SERVICE RESTAURANTS	7	180.00CR	6.00CR			186.00CR
722515	NONALCOHOLIC BEVERAGE BARS	1	20.00CR				20.00CR
811111	General Automotive Repair	2	40.00CR	3.00CR			43.00CR
811192	Car Washes	2	50.00CR	2.20CR			52.20CR
812111	Barber Shops	1	20.00CR				20.00CR
812112	Beauty Salons	1	20.00CR	2.80CR			22.80CR
812199	Other Personal Care Services	2	40.00CR				40.00CR
812990	All Other Personal Services	1	20.00CR	2.40CR			22.40CR
		TOTAL	11,450.50CR	455.48CR			11,905.98CR

LICENSES: THRU ZZZZZZZZZZ SORTED BY: NAME PAYMENT DATES: 4/01/2018 TO 4/30/2018

** FEE CODE TOTALS **

FEE CODE	DESCRIPTION		FEE	PENALTY	TAX	INTEREST	TOTAL PAID
			========== PAYMENT DISTRIBUTION ==========				
27-17-009	SERVICE BUSINESS	150	3,300.00CR	255.20CR			3,555.20CR
27-17-009C	SERVICE BUSINESS OVER 10	23	1,668.00CR	26.58CR			1,694.58CR
27-17-365	RETAIL/WHOLESALE BUSINESSES	57	6,482.50CR	173.70CR			6,656.20CR
		TOTAL	11,450.50CR	455.48CR			11,905.98CR

LICENSES: THRU ZZZZZZZZZZ SORTED BY: NAME PAYMENT DATES: 4/01/2018 TO 4/30/2018

** GENERAL LEDGER DISTRIBUTION **

FUND G/L ACCOUNT	ACCOUNT NAME	AMOUNT
001-000-220	PRIVILEGE LICENSES	11,905.98CR
099-000-008	POOLED CASH	11,905.98

REPORT SELECTION CRITERIA

REPORT SELECTION

LICENSES: THRU ZZZZZZZZZZ
EFFECTIVE DATES: 0/00/0000 TO 99/99/9999
EXPIRATION DATES: 0/00/0000 TO 99/99/9999
PAYMENT DATES: 4/01/2018 TO 4/30/2018
LICENSE CODES: Include: 27-17-009 , 27-17-035 , 27-17-299 , 27-17-365 , 27-17-415 , 27-17-425 , 27-27-005 27-27-301 , 75-85-0
REPORT CODES: All
FEE CODES: All

PRINT OPTIONS

SEQUENCE: NAME
REPORT TYPE: SUMMARY
REVERSE PAYMENTS: NO

END OF REPORT

VENDOR NUMBER	NAME	DOCKET NUMBER	COMMENT	INVOICE NUMBER	INVOICE DATE	INVOICE AMOUNT
01-05167	RIDE WITH GPS	146381	MAPPING SERVICES	I 201805214312	5/01/2018	250.00
			MAPPING SERVICES	001-340-650	250.00	
				TOTAL =		250.00

FUND TOTALS

FUND	NAME	TOTAL
001	GENERAL FUND	250.00
	TOTALS FOR ALL FUNDS =	250.00

VENDOR NUMBER	NAME	DOCKET NUMBER	COMMENT	INVOICE NUMBER	DATE	AMOUNT
01-61100	RIDGELAND TOURISM COMMISS	146382	TOURISM TAX	I 201805214314	5/15/2018	159,296.84
			TOURISM TAX	001-000-101	159,296.84	
				TOTAL =		159,296.84

VENDOR NUMBER	NAME	DOCKET NUMBER	COMMENT	INVOICE NUMBER	DATE	AMOUNT
01-03495	MISS DEPARTMENT OF REVENU	146383	APRIL 2018 SALES TAX	I 201805214313	5/15/2018	4,326.25
			APRIL 2018 SALES TAX	001-000-104	8.40	
			APRIL 2018 SALES TAX	400-000-111	4,317.85	
					TOTAL =	4,326.25

FUND TOTALS

FUND	NAME	TOTAL
001	GENERAL FUND	159,305.24
400	PUBLIC UTILITIES FUND	4,317.85
	TOTALS FOR ALL FUNDS =	163,623.09

VENDOR NUMBER	NAME	DOCKET NUMBER	COMMENT	INVOICE NUMBER	INVOICE DATE	INVOICE AMOUNT
01-73625	UNITED STATES POSTMASTER	146384	POSTAGE FOR MAGAZINE	I 201805214315	5/17/2018	3,218.00
			POSTAGE FOR MAGAZINE	001-093-606	3,218.00	
					TOTAL =	3,218.00

FUND TOTALS

FUND	NAME	TOTAL
001	GENERAL FUND	3,218.00
	TOTALS FOR ALL FUNDS =	3,218.00

VENDOR NUMBER	NAME	DOCKET NUMBER	COMMENT	INVOICE NUMBER	INVOICE DATE	INVOICE AMOUNT
01-45690	MISS DEPARTMENT OF EMPLOY	146385	TIFFANY DAVIS BENEFIT CHARGES	I 201805214316	5/21/2018	343.44
			TIFFANY DAVIS BENEFIT CHARGES	001-092-625	343.44	
					TOTAL =	343.44

FUND TOTALS

FUND	NAME	TOTAL
001	GENERAL FUND	343.44
	TOTALS FOR ALL FUNDS =	343.44

VENDOR NUMBER	NAME	DOCKET NUMBER	COMMENT	INVOICE NUMBER	DATE	AMOUNT
01-00550	A T & T	146386	60189817025490595:05-4 - 06-03	I 201805314368	5/04/2018	30.99
			60189817025490595:05-4 - 06-03	001-100-604	30.99	
01-01655	ADVANTAGE BUSINESS SYSTEM	146387	PRINTING FEES	I 145537	5/18/2018	154.36
			BLACK/WHITE COPIES	001-340-604	146.84	
			COLORED COPIES	001-340-604	7.52	
01-02164	AETNA	146388	863057-10-0001: JUNE 2018	I 201805314367	5/16/2018	2,765.18
			863057-10-0001: JUNE 2018	001-010-480	106.00	
			863057-10-0001: JUNE 2018	001-020-480	95.40	
			863057-10-0001: JUNE 2018	001-040-480	74.20	
			863057-10-0001: JUNE 2018	001-040-480	10.60	
			863057-10-0001: JUNE 2018	001-092-480	10.60	
			863057-10-0001: JUNE 2018	001-100-480	869.20	
			863057-10-0001: JUNE 2018	001-160-480	614.80	
			863057-10-0001: JUNE 2018	001-180-480	116.60	
			863057-10-0001: JUNE 2018	001-201-480	318.00	
			863057-10-0001: JUNE 2018	001-340-480	137.80	
			863057-10-0001: JUNE 2018	005-101-480	21.20	
			863057-10-0001: JUNE 2018	400-650-480	265.00	
			863057-10-0001: JUNE 2018	404-650-480	21.20	
			863057-10-0001: JUNE 2018	001-000-170	91.30	
			863057-10-0001: JUNE 2018	005-000-170	0.00	
			863057-10-0001: JUNE 2018	400-000-170	13.28	
			863057-10-0001: JUNE 2018	404-000-170	0.00	
01-03644	AFLAC	146389	EBQ21: MAY 2018	I 650264	5/15/2018	7,359.40
			EBQ21: MAY 2018	001-000-171	5,671.58	
			EBQ21: MAY 2018	005-000-171	167.44	
			EBQ21: MAY 2018	400-000-171	1,489.04	
			EBQ21: MAY 2018	404-000-171	31.34	
01-05391	AHLRICH, CARLEY	146390	6 GAMES @ $10.00; MAY 8 & 10	I 201805294355	5/10/2018	60.00
			6 GAMES @ $10.00; MAY 8 & 10	001-340-690	60.00	
01-05391	AHLRICH, CARLEY	146391	3 GAMES @ $10.00; MAY 14	I 201805294356	5/14/2018	30.00
			3 GAMES @ $10.00; MAY 14	001-340-690	30.00	
01-05393	AHLRICH, JAMI	146392	6 GAMES @ $10.00; MAY 7 & 10	I 201805294357	5/10/2018	60.00
			6 GAMES @ $10.00; MAY 7 & 10	001-340-690	60.00	
01-05393	AHLRICH, JAMI	146393	3 GAMES @ $10.00; MAY 17	I 201805294358	5/17/2018	30.00
			3 GAMES @ $10.00; MAY 17	001-340-690	30.00	
01-05393	AHLRICH, JAMI	146394	3 GAMES @ $10.00; MAY 21	I 201805294359	5/21/2018	30.00
			3 GAMES @ $10.00; MAY 21	001-340-690	30.00	
01-04767	AHLRICH, PAUL	146395	3 GAMES @ $10.00; MAY 10	I 201805294360	5/10/2018	30.00
			3 GAMES @ $10.00; MAY 10	001-340-690	30.00	
01-04767	AHLRICH, PAUL	146396	2 GAMES @ $10/00; MAY 22	I 201805294361	5/22/2018	20.00

VENDOR NUMBER	NAME	DOCKET NUMBER	COMMENT	INVOICE NUMBER	DATE	AMOUNT	
01-04767	AHLRICH, PAUL	146396	2 GAMES @ $10/00; MAY 22	I 201805294361	5/22/2018	20.00	CONT
			2 GAMES @ $10/00; MAY 22	001-340-690	20.00		
01-04417	ALLEN ENGINEERING AND SCI	146397	03-26-18 - 04-29-18 STORMWATER	I 00180345	4/29/2018	1,500.00	
			03-26-18 - 04-29-18 STORMWATER	001-201-600	1,500.00		
01-01558	AMERICA'S CHOICE CHEMICAL	146398	ROUND UP	I 12634	5/14/2018	3,759.30	
			ROUND UP	001-201-575	1,549.75		
			MSMA	001-201-575	329.90		
			ROUND UP	400-650-575	1,549.75		
			MSMA	400-650-575	329.90		
01-04880	AMERICAN TIRE DISTRIBUTOR	146399	REPLACE WORN TIRES P249	I S107971021	5/09/2018	295.64	
			UNIROYAL TIRES	001-100-632	291.64		
			FED TIRE TAX	001-100-632	4.00		
01-04880	AMERICAN TIRE DISTRIBUTOR	146400	4 TIRES P312 1 TIRE P349	I S108187605	5/14/2018	132.87	
			P349 265/70/17 AT	001-100-632	131.87		
			TIRE DISPOSAL FEE	001-100-632	1.00		
01-04880	AMERICAN TIRE DISTRIBUTOR	146401	4 TIRES P312 1 TIRE P349	I S108187619	5/14/2018	477.84	
			P312 -265/60/18	001-100-632	473.84		
			TIRE DISPOSAL FEE	001-100-632	4.00		
01-04880	AMERICAN TIRE DISTRIBUTOR	146402	P324 TIRES	I S108785441	5/25/2018	237.88	
			P324 TIRES225/60/18	001-100-632	235.88		
			FED DISPOSAL FEE	001-100-632	2.00		
01-04660	ANDERSON, MERRELL	146403	9 GAMES @ $25.00; MAY 7, 8 &10	I 201805294362	5/10/2018	225.00	
			9 GAMES @ $25.00; MAY 7, 8 &10	001-340-690	225.00		
01-04660	ANDERSON, MERRELL	146404	6 GAMES @ $25.00; MAY 14 & 17	I 201805294363	5/17/2018	150.00	
			6 GAMES @ $25.00; MAY 14 & 17	001-340-690	150.00		
01-04660	ANDERSON, MERRELL	146405	9 GAMES @ $25.00; MAY 21,22&24	I 201805294364	5/24/2018	225.00	
			9 GAMES @ $25.00; MAY 21,22&24	001-340-690	225.00		
01-01944	ATMOS ENERGY	146406	3013046088:04-24-18 - 05-21-18	I 201805314369	5/21/2018	81.79	
			3013046088:04-24-18 - 05-21-18	001-160-630	81.79		
01-02958	AUTOZONE INC	146407	LIGHT	I 2097810462	5/08/2018	47.99	
			LIGHT	001-340-632	47.99		
01-05550	B W I OF JACKSON INC	146408	HERBICIDE	I 14728283	5/14/2018	1,220.00	
			HERBICIDE	001-340-575	1,220.00		
01-03925	BANCORPSOUTH EQUIPMENT FI	146409	LEASE FOR WHEEL LOADER	I 39	5/29/2018	1,744.00	
			LEASE FOR WHEEL LOADER	001-450-827	1,744.00		
01-03426	BASS, NOELL	146410	ADV TRAV: 06-10-18 - 06-15-18	I 201805314370	5/10/2018	235.75	
			ADV TRAV: 06-10-18 - 06-15-18	001-100-610	235.75		

VENDOR NUMBER	NAME	DOCKET NUMBER	COMMENT	INVOICE NUMBER	DATE	AMOUNT
01-03127	BEAL, KRISTEN	146411	REIMBURSE FOR LUNCH MEETING	I 201805314445	5/23/2018	16.00
			REIMBURSE FOR LUNCH MEETING	001-093-681	16.00	
01-05407	BERRY, BRICE	146412	ADV TRAV: 06-10-18 - 06-15-18	I 201805314372	5/10/2018	235.75
			ADV TRAV: 06-10-18 - 06-15-18	001-100-610	235.75	
01-05152	BETHANY JR, HOWARD	146413	5 GAMES @ $25.00; MAY 7 & 10	I 201805294344	5/10/2018	125.00
			5 GAMES @ $25.00; MAY 7 & 10	001-340-690	125.00	
01-05152	BETHANY JR, HOWARD	146414	6 GAMES @ $25.00; MAY 14 & 17	I 201805294345	5/17/2018	150.00
			6 GAMES @ $25.00; MAY 14 & 17	001-340-690	150.00	
01-05152	BETHANY JR, HOWARD	146415	8GAMES@$25&1GAM@$30;5/21,22,23	I 201805294346	5/23/2018	230.00
			8GAMES@$25&1GAM@$30;5/21,22,23	001-340-690	230.00	
01-04751	BIKE CROSSING LLC, THE	146416	PUMPS	I 201805164307	5/15/2018	199.96
			PUMPS	001-340-650	199.96	
01-04940	BLACKLEDGE, SHARON	146417	POTTERY	I 81025105	5/15/2018	2,058.00
			FIRST PLACE OVERALL	001-340-650	90.00	
			FIRST PLACE	001-340-650	798.00	
			SECOND PLACE	001-340-650	663.00	
			THIRD PLACE	001-340-650	507.00	
01-03264	BLAYLOCK, RONALD	146418	MAY 22, 2018 MEETING	I 052218	5/22/2018	50.00
			MAY 22, 2018 MEETING	001-180-611	50.00	
01-07400	BLURTON, BANKS & ASSOCIAT	146419	WALMART DRIVEWAY	I 054-722	5/24/2018	8,900.00
			DRIVEWAY REPAIR	400-650-603	8,900.00	
01-02258	BRACEY, RICKY	146420	ADV TRAV: 06-18-18 - 06-22-18	I 201805314371	3/20/2018	235.75
			ADV TRAV: 06-18-18 - 06-22-18	001-100-610	235.75	
01-02103	BROOKS, ADELL	146421	3 GAMES @ $25.00; MAY 7	I 201805294347	5/07/2018	75.00
			3 GAMES @ $25.00; MAY 7	001-340-690	75.00	
01-02103	BROOKS, ADELL	146422	3 GAMES @ $25.00; MAY 14	I 201805294348	5/14/2018	75.00
			3 GAMES @ $25.00; MAY 14	001-340-690	75.00	
01-01784	BROOKS, PERCY	146423	9 GAMES @ $25.00; MAY 7, 8 &10	I 201805294349	5/10/2018	225.00
			9 GAMES @ $25.00; MAY 7, 8 &10	001-340-690	225.00	
01-01784	BROOKS, PERCY	146424	3GMS@$25;5/17 & 3GMS@$30;5/14	I 201805294350	5/17/2018	165.00
			3GMS@$25;5/17 & 3GMS@$30;5/14	001-340-690	165.00	
01-01784	BROOKS, PERCY	146425	3 GAMES @ $25.00; MAY 21	I 201805294351	5/21/2018	75.00
			3 GAMES @ $25.00; MAY 21	001-340-690	75.00	
01-03797	BROWN, EDDIE LEE	146426	9 GAMES @ $25.00; MAY 7, 8 &10	I 201805294352	5/10/2018	225.00
			9 GAMES @ $25.00; MAY 7, 8 &10	001-340-690	225.00	

VENDOR NUMBER	NAME	DOCKET NUMBER	COMMENT	INVOICE NUMBER	DATE	AMOUNT
01-03797	BROWN, EDDIE LEE	146427	6 GAMES @ $25.00; MAY 14 & 17	I 201805294353	5/17/2018	150.00
			6 GAMES @ $25.00; MAY 14 & 17	001-340-690	150.00	
01-03797	BROWN, EDDIE LEE	146428	9 GAMES @ $25.00; MAY 21,22&24	I 201805294354	5/24/2018	225.00
			9 GAMES @ $25.00; MAY 21,22&24	001-340-690	225.00	
01-02311	BUFKIN MECHANICAL, INC	146429	FD-CENTRAL	I 72692-2	5/15/2018	279.00
			LABOR	001-160-637	100.00	
			TOILET	001-160-637	179.00	
01-02311	BUFKIN MECHANICAL, INC	146430	TOILET VALVE REPAIR	I 72729	5/17/2018	185.00
			PLUMBING SERVICE	001-100-637	125.00	
			PLUMBING MATERIAL	001-100-637	60.00	
01-03826	C SPIRE WIRELESS	146431	0002596490:04-08-18 - 05-07-18	I 201805314377	5/07/2018	745.69
			0002596490:04-08-18 - 05-07-18	001-340-605	745.69	
01-03826	C SPIRE WIRELESS	146432	0031603285:04-23-18 - 05-22-18	I 201805314378	5/22/2018	3,029.70
			0031603285:04-23-18 - 05-22-18	001-100-605	3,029.70	
01-03826	C SPIRE WIRELESS	146433	0031656019:04-23-18 - 05-22-18	I 201805314379	5/22/2018	50.28
			0031656019:04-23-18 - 05-22-18	001-020-605	50.28	
01-03826	C SPIRE WIRELESS	146434	0031656041:04-23-18 - 05-22-18	I 201805314380	5/22/2018	563.27
			0031656041:04-23-18 - 05-22-18	001-020-605	273.52	
			0031656041:04-23-18 - 05-22-18	001-042-605	168.94	
			0031656041:04-23-18 - 05-22-18	001-080-605	50.68	
			0031656041:04-23-18 - 05-22-18	001-092-605	19.85	
			0031656041:04-23-18 - 05-22-18	001-093-605	50.28	
01-03826	C SPIRE WIRELESS	146435	0031656076:04-23-18 - 05-22-18	I 201805314381	5/22/2018	303.69
			0031656076:04-23-18 - 05-22-18	001-160-605	303.69	
01-03826	C SPIRE WIRELESS	146436	0031656148:04-23-18 - 05-22-18	I 201805314382	5/22/2018	904.43
			0031656148:04-23-18 - 05-22-18	001-201-605	381.08	
			0031656148:04-23-18 - 05-22-18	400-650-605	438.88	
			0031656148:04-23-18 - 05-22-18	404-650-605	84.47	
01-03297	C.C. LYNCH & ASSOCIATES,	146437	FIELD SERVICE VISIT	I 181090	5/08/2018	2,500.00
			FIELD SERVICE VISIT	404-650-603	2,500.00	
01-04443	CALERO SOFTWARE LLC	146438	VERASMART RENEWAL	I AA14163	5/09/2018	239.73
			VERASMART RENEWAL	001-042-635	239.73	
01-03487	CAPITOL CHLORINATOR & UTI	146439	BOOSTER PUMPS	I 1242	3/14/2018	1,732.00
			BOOSTER PUMPS	400-650-635	1,150.00	
			FREIGHT	400-650-635	15.00	
			EJ100 EJECTOR NOZZLE	400-650-635	567.00	
01-01441	CAPITOL TOWING INC	146440	TOW PATROL CAR P309	I 87066	5/18/2018	55.00
			TOW PATROL CAR P309	001-100-632	55.00	

VENDOR NUMBER	NAME	DOCKET NUMBER	COMMENT	INVOICE NUMBER	DATE	AMOUNT
01-04307	CARD SERVICES CENTER	146441	04-17-18 - 05-17-18 SERVICES	I 201805314443	5/17/2018	315.44
			04-17-18 - 05-17-18 SERVICES	001-040-610	45.34	
			04-17-18 - 05-17-18 SERVICES	001-042-610	22.67	
			04-17-18 - 05-17-18 SERVICES	400-650-610	247.43	
01-05287	CARDIO PARTNERS INC	146442	FD-BATTERY	I 627920	5/22/2018	345.00
			LIFEPAK AED BATTERY	001-160-635	345.00	
01-03640	CAROUSEL INDUSTRIES OF NO	146443	06-27-18 - 07-26-18 SERVICE	I 0511180907M	5/11/2018	670.31
			06-27-18 - 07-26-18 SERVICE	001-010-635	57.13	
			06-27-18 - 07-26-18 SERVICE	001-020-635	19.99	
			06-27-18 - 07-26-18 SERVICE	001-040-635	47.58	
			06-27-18 - 07-26-18 SERVICE	001-100-635	170.94	
			06-27-18 - 07-26-18 SERVICE	001-160-635	136.43	
			06-27-18 - 07-26-18 SERVICE	001-180-635	40.56	
			06-27-18 - 07-26-18 SERVICE	001-201-635	58.78	
			06-27-18 - 07-26-18 SERVICE	001-340-635	30.66	
			06-27-18 - 07-26-18 SERVICE	400-650-635	108.24	
01-04138	CASE, JEFF	146444	ACT TRAV: 04-29-18 - 05-04-18	I 201805314373	5/09/2018	167.86
			ACT TRAV: 04-29-18 - 05-04-18	001-160-610	167.86	
01-02764	CENTRAL MISSISSIPPI CRIME	146445	APRIL 2018	I 201805314376	5/10/2018	545.00
			APRIL 2018	001-000-330	545.00	
01-12050	CENTRAL PIPE SUPPLY INC	146446	WATER PARTS	I S100139457.001	5/01/2018	2,528.30
			1" METER BASE	400-650-575	1,652.00	
			16 X 1 TAPPING SADDL	400-650-575	876.30	
01-05200	DANNY LOUIS WELCH	146447	PRE-EMPLOYMENT SCREEN-J WATKIN	I 18-006	5/16/2018	200.00
			PRE-EMPLOYMENT SCREEN-J WATKIN	001-100-604	200.00	
01-02882	CHAPIN, KELLY	146448	ADV TRAV: 06-10-18 - 06-15-18	I 201805314374	5/10/2018	235.75
			ADV TRAV: 06-10-18 - 06-15-18	001-100-610	235.75	
01-13025	CINTAS CORPORATION LOC #2	146449	02147	I 10482945	3/23/2018	40.53
			02147	001-340-540	40.53	
01-13025	CINTAS CORPORATION LOC #2	146450	04052	I 10482946	3/23/2018	47.00
			04052	001-340-540	47.00	
01-13025	CINTAS CORPORATION LOC #2	146451	02148	I 10482947	3/23/2018	54.09
			02148	001-180-540	44.97	
			02148	400-650-540	9.12	
01-13025	CINTAS CORPORATION LOC #2	146452	04052	I 10486147	3/30/2018	47.00
			04052	001-340-540	47.00	
01-13025	CINTAS CORPORATION LOC #2	146453	02148	I 10486148	3/30/2018	54.09
			02148	001-180-540	44.97	
			02148	400-650-540	9.12	

VENDOR NUMBER	NAME	DOCKET NUMBER	COMMENT	INVOICE NUMBER	DATE	AMOUNT
01-13025	CINTAS CORPORATION LOC #2	146454	02147	I 10504879	5/11/2018	40.53
			02147	001-340-540	40.53	
01-13025	CINTAS CORPORATION LOC #2	146455	04052	I 10504880	5/11/2018	47.00
			04052	001-340-540	47.00	
01-13025	CINTAS CORPORATION LOC #2	146456	02148	I 10504881	5/11/2018	54.09
			02148	001-180-540	44.97	
			02148	400-650-540	9.12	
01-13025	CINTAS CORPORATION LOC #2	146457	04448	I 10506249	5/15/2018	350.53
			04448	001-201-535	350.53	
01-13025	CINTAS CORPORATION LOC #2	146458	04450	I 10506250	5/15/2018	175.50
			04450	400-650-535	162.44	
			04450	404-650-535	13.06	
01-13025	CINTAS CORPORATION LOC #2	146459	04448	I 10506251	5/15/2018	2.59
			0448	001-201-540	2.59	
01-13025	CINTAS CORPORATION LOC #2	146460	04450	I 10506252	5/15/2018	47.32
			04450	400-650-540	47.32	
01-13025	CINTAS CORPORATION LOC #2	146461	08828	I 10508016	5/18/2018	30.00
			08828	001-340-540	30.00	
01-13025	CINTAS CORPORATION LOC #2	146462	02147	I 10508023	5/18/2018	40.53
			02147	001-340-540	40.53	
01-13025	CINTAS CORPORATION LOC #2	146463	04052	I 10508024	5/18/2018	47.00
			04052	001-340-540	47.00	
01-13025	CINTAS CORPORATION LOC #2	146464	02148	I 10508025	5/18/2018	54.09
			02148	001-180-540	44.97	
			02148	400-650-540	9.12	
01-13025	CINTAS CORPORATION LOC #2	146465	04448	I 10509437	5/22/2018	271.42
			04448	001-201-535	271.42	
01-13025	CINTAS CORPORATION LOC #2	146466	04450	I 10509438	5/22/2018	175.50
			04450	400-650-535	162.44	
			04450	404-650-535	13.06	
01-13025	CINTAS CORPORATION LOC #2	146467	04448	I 10509439	5/22/2018	2.59
			04448	001-201-540	2.59	
01-13025	CINTAS CORPORATION LOC #2	146468	04450	I 10509440	5/22/2018	47.32
			04450	400-650-540	47.32	
01-13025	CINTAS CORPORATION LOC #2	146469	08828	I 10511210	5/25/2018	30.00
			08828	001-340-540	30.00	

VENDOR NUMBER	NAME	DOCKET NUMBER	COMMENT	INVOICE NUMBER	DATE	AMOUNT
01-13025	CINTAS CORPORATION LOC #2	146470	02147	I 10511216	5/25/2018	40.53
			02147	001-340-540	40.53	
01-13025	CINTAS CORPORATION LOC #2	146471	04052	I 10511217	5/25/2018	47.00
			04052	001-340-540	47.00	
01-13025	CINTAS CORPORATION LOC #2	146472	02148	I 10511219	5/25/2018	54.09
			02148	001-180-540	44.97	
			02148	400-650-540	9.12	
01-13025	CINTAS CORPORATION LOC #2	146473	04448	I 10512643	5/29/2018	271.42
			04448	001-201-535	271.42	
01-13025	CINTAS CORPORATION LOC #2	146474	04450	I 10512644	5/29/2018	178.61
			04450	400-650-535	165.55	
			04450	404-650-535	13.06	
01-13025	CINTAS CORPORATION LOC #2	146475	04448	I 10512645	5/29/2018	2.59
			04448	001-201-540	2.59	
01-13025	CINTAS CORPORATION LOC #2	146476	04450	I 10512646	5/29/2018	47.32
			04450	400-650-540	47.32	
01-13200	CITY OF JACKSON	146477	JUNE 2018 RIDGELAND WEST SEWAG	I 201805314375	5/31/2018	37,410.35
			JUNE 2018 RIDGELAND WEST SEWAG	400-650-691	37,410.35	
01-14370	CLYDE C SCOTT INSURANCE A	146478	RENEW MAYOR MCGEE	I 29208	5/18/2018	250.00
			RENEW MAYOR MCGEE	001-092-625	250.00	
01-14370	CLYDE C SCOTT INSURANCE A	146479	RENEW D. SMITH	I 29209	5/18/2018	250.00
			RENEW D. SMITH	001-092-625	250.00	
01-14370	CLYDE C SCOTT INSURANCE A	146480	RENEW K. HEARD	I 29210	5/18/2018	250.00
			RENEW K. HEARD	001-092-625	250.00	
01-14370	CLYDE C SCOTT INSURANCE A	146481	RENEW K. HOLDER	I 29211	5/18/2018	250.00
			RENEW K. HOLDER	001-092-625	250.00	
01-14370	CLYDE C SCOTT INSURANCE A	146482	RENEW W. LEE	I 29212	5/18/2018	250.00
			RENEW W. LEE	001-092-625	250.00	
01-14370	CLYDE C SCOTT INSURANCE A	146483	RENEW B. RAMSEY	I 29213	5/18/2018	250.00
			RENEW B. RAMSEY	001-092-625	250.00	
01-14370	CLYDE C SCOTT INSURANCE A	146484	RENEW W. HAMLIN	I 29214	5/18/2018	250.00
			RENEW W. HAMLIN	001-092-625	250.00	
01-14370	CLYDE C SCOTT INSURANCE A	146485	RENEW C. GAUTIER	I 29215	5/18/2018	250.00
			RENEW C. GAUTIER	001-092-625	250.00	
01-05176	PEGGY SUE CODY	146486	WATER QUALITY BROCHURE	I 201805114304	5/08/2018	400.00

VENDOR NUMBER	NAME	DOCKET NUMBER	COMMENT	INVOICE NUMBER	DATE	AMOUNT	
01-05176	PEGGY SUE CODY	146486	WATER QUALITY BROCHURE	I 201805114304	5/08/2018	400.00	CONT
			WATER QUALITY BROCHURE	400-650-604	400.00		
01-02440	COMCAST CABLE	146487	8396410530286232:05-19 - 06-18	I 201805314383	5/15/2018	104.85	
			8396410530286232:05-19 - 06-18	001-201-604	104.85		
01-01618	CONNECTOR SPECIALISTS OF	146488	CONNECTOR SPECIALISTS OF MS	I 00786677	5/08/2018	111.15	
			HOSES	001-340-632	35.31		
			HOSES	001-340-632	75.84		
01-01618	CONNECTOR SPECIALISTS OF	146489	HYDRAULIC HOSE	I 00790198	5/24/2018	88.12	
			HYDRAULIC HOSE	001-201-632	88.12		
01-04766	CROWDER, JEANNA	146490	6 GAMES @ $10.00; MAY 7 & 8	I 201805294332	5/08/2018	60.00	
			6 GAMES @ $10.00; MAY 7 & 8	001-340-690	60.00		
01-04766	CROWDER, JEANNA	146491	6 GAMES @ $10.00; MAY 14 & 17	I 201805294333	5/17/2018	60.00	
			6 GAMES @ $10.00; MAY 14 & 17	001-340-690	60.00		
01-04766	CROWDER, JEANNA	146492	6 GAMES @ $10.00; MAY 21 & 24	I 201805294334	5/24/2018	60.00	
			6 GAMES @ $10.00; MAY 21 & 24	001-340-690	60.00		
01-04592	CRYSTAL CLEAN SWEEPING IN	146493	04-26-18 - 05-22-18 SWEEPING	I 32066	5/29/2018	7,711.75	
			04-26-18 - 05-22-18 SWEEPING	001-201-604	7,711.75		
01-17329	DAVIS REFRIGERATION & ELE	146494	YEAR MAINT. ON ICE MACHIN	I 2760	5/10/2018	395.00	
			YEAR MAINT. ON ICE MACHIN	400-650-635	395.00		
01-17329	DAVIS REFRIGERATION & ELE	146495	YEAR MAINT. ON ICE MACHIN	I 2761	5/10/2018	395.00	
			YEAR MAINT. ON ICE MACHIN	001-201-635	395.00		
01-17900	DEARING ADDRESSING & MAIL	146496	SR. ADULT NEWSLETTER	I 25107	5/21/2018	318.62	
			EMAIL DOWNLOAD	001-340-620	25.75		
			CASS CERTIFY	001-340-620	7.00		
			USPS NCOA PROCESS	001-340-620	30.00		
			COMPUTER ADDRESS	001-340-620	26.82		
			FOLDING BY HAND	001-340-620	20.00		
			APPLY LASER SHEET	001-340-620	50.00		
			RUBBER STAMPING	001-340-620	10.00		
			TABBING WHITE TABS	001-340-620	28.00		
			POSTAGE	001-340-620	121.05		
01-03638	DELTA DENTAL INSURANCE CO	146497	25-1536700000: JUNE 2018	I BE002841112	6/01/2018	11,504.98	
			25-1536700000: JUNE 2018	001-010-480	281.50		
			25-1536700000: JUNE 2018	001-020-480	253.35		
			25-1536700000: JUNE 2018	001-020-480	59.44		
			25-1536700000: JUNE 2018	001-040-480	197.05		
			25-1536700000: JUNE 2018	001-040-480	28.15		
			25-1536700000: JUNE 2018	001-092-480	28.15		
			25-1536700000: JUNE 2018	001-100-480	2,252.00		
			25-1536700000: JUNE 2018	001-160-480	1,632.70		
			25-1536700000: JUNE 2018	001-160-480	28.15		

VENDOR NUMBER	NAME	DOCKET NUMBER	COMMENT	INVOICE NUMBER	DATE	AMOUNT	
01-03638	DELTA DENTAL INSURANCE CO	146497	25-1536700000: JUNE 2018	I BE002841112	6/01/2018	11,504.98	CONT
			25-1536700000: JUNE 2018	001-180-480	309.65		
			25-1536700000: JUNE 2018	001-201-480	872.65		
			25-1536700000: JUNE 2018	001-340-480	394.10		
			25-1536700000: JUNE 2018	001-340-480	28.15		
			25-1536700000: JUNE 2018	005-101-480	56.30		
			25-1536700000: JUNE 2018	400-650-480	703.75		
			25-1536700000: JUNE 2018	404-650-480	56.30		
			25-1536700000: JUNE 2018	001-000-170	3,699.47		
			25-1536700000: JUNE 2018	005-000-170	0.00		
			25-1536700000: JUNE 2018	400-000-170	592.83		
			25-1536700000: JUNE 2018	404-000-170	31.29		
01-01993	DEVINEY RENTAL AND SUPPLY	146498	TRACTOR PARTS	I IV72500	5/21/2018	91.37	
			STABILIZER ARM	001-201-635	83.37		
			FREIGHT	001-201-635	8.00		
01-18615	DICKEN, BILL	146499	MAY 22, 2018 MEETING	I 052218	5/22/2018	50.00	
			MAY 22, 2018 MEETING	001-180-611	50.00		
01-18620	DICKERSON & BOWEN INC	146500	TONS OF ASPHALT	I 73234	4/24/2018	1,922.94	
			TONS OF ASPHALT	001-201-575	1,922.94		
01-18620	DICKERSON & BOWEN INC	146501	TONS OF ASPHALT	I 73280	4/30/2018	1,546.02	
			TONS OF ASPHALT	001-201-575	1,546.02		
01-18620	DICKERSON & BOWEN INC	146502	TONS OF ASPHALT	I 73294	4/30/2018	3,168.18	
			TONS OF ASPHALT	001-201-575	3,168.18		
01-18620	DICKERSON & BOWEN INC	146503	TONS OF ASPHALT	I 73332	5/08/2018	6,006.96	
			TONS OF ASPHALT	001-201-575	6,006.96		
01-18620	DICKERSON & BOWEN INC	146504	EAST CO. LINE ROAD ST-17-00	I ONE(FINAL)	5/02/2018	1,100,947.42	
			EAST CO. LINE ROAD ST-17-00	366-601-750	1,100,947.42		
01-04398	DIGICERT, INC	146505	SSL PLUS RENEWAL/BOMGAR	I 96560	5/24/2018	175.00	
			SSL PLUS RENEWAL/BOMGAR	001-042-604	175.00		
01-19050	DISCOUNT TROPHY INC	146506	PORTRAIT NAMEPLATE	I 117263	5/14/2018	7.00	
			PORTRAIT NAMEPLATE	001-020-540	7.00		
01-19050	DISCOUNT TROPHY INC	146507	MIRACLE LEAGUE	I 117434	5/22/2018	350.00	
			MEDALS	001-340-545	350.00		
01-19150	DIVE RESCUE INTERNATIONAL	146508	HAZMAT DRYSUITS	I 176741	5/17/2018	9,225.00	
			HAZMAT DRYSUITS	001-160-730	9,125.00		
			FREIGHT	001-160-730	100.00		
01-05383	DYLAN SCOTT ENTERTAINMENT	146509	FINAL PAYMENT FOR BALLOON GLOW	I 201805314384	5/17/2018	10,000.00	
			FINAL PAYMENT FOR BALLOON GLOW	001-340-650	10,000.00		
01-03328	EDKO LLC	146510	1ST HERBICIDE APPLICATION	I 347964	5/17/2018	5,165.47	

VENDOR NUMBER	NAME	DOCKET NUMBER	COMMENT	INVOICE NUMBER	DATE	AMOUNT	
01-03328	EDKO LLC	146510	1ST HERBICIDE APPLICATION	I 347964	5/17/2018	5,165.47	CONT
			1ST HERBICIDE APPLICATION	001-201-604	5,165.47		
01-03328	EDKO LLC	146511	DITCH SPRAYING	I 347965	5/17/2018	213.33	
			DITCH SPRAYING	001-340-575	213.33		
01-02850	ELITE WATER & COFFEE SERV	146512	WATER COOLER RENTAL	I 155289	4/30/2018	40.00	
			WATER COOLER RENTAL	001-100-540	40.00		
01-02850	ELITE WATER & COFFEE SERV	146513	COFFEE SUPPLIES	I 155462	5/25/2018	178.90	
			COFFEE PACKS	001-100-540	105.00		
			LIQUID CREAMER	001-100-540	73.90		
01-04298	ELKINS WHOLESALE INC	146514	JANITORIAL SUPPLIES	I 346687	5/03/2018	111.82	
			LARGE CAN LINER	001-100-510	53.58		
			SMALL CAN LINERS	001-100-510	58.24		
01-03711	EMERGENCY EQUIPMENT PROFE	146515	FD- FLOW TEST, COMP. SVC	I 434487	5/17/2018	3,386.77	
			FLOW TEST SCBA	001-160-635	1,480.00		
			ELECT. CONNECT.	001-160-635	90.00		
			ASSY HOSE HUD SOCKT	001-160-635	455.00		
			AA BATTERIES	001-160-635	216.00		
			COMPRESSOR SRVC	001-160-635	395.00		
			AIR ANALYSIS	001-160-635	250.00		
			PURIFICATION FILTER	001-160-635	173.71		
			PURIFICATION FILTER	001-160-635	137.14		
			COMPRESSOR OIL	001-160-635	39.50		
			LABOR	001-160-635	95.00		
			MILEAGE	001-160-635	40.00		
			PURIFIER BACK UP RIN	001-160-635	15.42		
01-03711	EMERGENCY EQUIPMENT PROFE	146516	FD-ENGINE 2	I 434647	5/24/2018	1,308.98	
			LABOR	001-160-632	918.00		
			SW FOOT BUTTON SIREN	001-160-632	90.20		
			AIR HORN KIT	001-160-632	95.14		
			ZICO ELECT LADDER	001-160-632	60.08		
			ANL FUSE-200 AMP LAD	001-160-632	20.00		
			TRAVEL TIME	001-160-632	90.00		
			SHOP SUPPLIES	001-160-632	20.00		
			FREIGHT	001-160-632	15.56		
01-21506	ENTERGY	146517	111753950: 04-06-18 - 05-04-18	I 201805314385	5/10/2018	278.91	
			111753950: 04-06-18 - 05-04-18	001-201-684	278.91		
01-21506	ENTERGY	146518	100962737: 04-24-18 - 05-23-18	I 201805314386	5/29/2018	9.53	
			100962737: 04-24-18 - 05-23-18	400-650-630	9.53		
01-21506	ENTERGY	146519	105612568: 04-24-18 - 05-24-18	I 201805314387	5/29/2018	257.72	
			105612568: 04-24-18 - 05-24-18	001-201-684	257.72		
01-21506	ENTERGY	146520	105612600: 04-24-18 - 05-24-18	I 201805314389	5/29/2018	319.31	
			105612600: 04-24-18 - 05-24-18	001-201-684	319.31		

VENDOR NUMBER	NAME	DOCKET NUMBER	COMMENT	INVOICE NUMBER	INVOICE DATE	INVOICE AMOUNT
01-21506	ENTERGY	146521	123466740: 04-25-18 - 05-24-18 I	201805314390	5/29/2018	104.19
			123466740: 04-25-18 - 05-24-18	001-201-684	104.19	
01-21506	ENTERGY	146522	123466989: 04-25-18 - 05-24-18 I	201805314391	5/29/2018	32.28
			123466989: 04-25-18 - 05-24-18	001-201-684	32.28	
01-21506	ENTERGY	146523	123467862: 04-25-18 - 05-24-18 I	201805314392	5/29/2018	79.48
			123467862: 04-25-18 - 05-24-18	001-201-684	79.48	
01-21506	ENTERGY	146524	123469033: 04-25-18 - 05-24-18 I	201805314393	5/29/2018	33.04
			123469033: 04-25-18 - 05-24-18	001-201-684	33.04	
01-21506	ENTERGY	146525	128655347: 04-24-18 - 05-24-18 I	201805314394	5/29/2018	172.80
			128655347: 04-24-18 - 05-24-18	001-201-684	172.80	
01-21506	ENTERGY	146526	148884430: 04-25-18 - 05-24-18 I	201805314395	5/29/2018	1,733.47
			148884430: 04-25-18 - 05-24-18	001-201-684	1,733.47	
01-21506	ENTERGY	146527	44930162: 04-24-18 - 05-24-18 I	201805314396	5/29/2018	24.13
			44930162: 04-24-18 - 05-24-18	001-201-684	24.13	
01-21506	ENTERGY	146528	67890079: 04-25-18 - 05-24-18 I	201805314397	5/29/2018	35.22
			67890079: 04-25-18 - 05-24-18	001-201-684	35.22	
01-21506	ENTERGY	146529	100962695: 04-25-18 - 05-24-18 I	201805314398	5/30/2018	9.28
			100962695: 04-25-18 - 05-24-18	400-650-630	9.28	
01-21506	ENTERGY	146530	100962703: 04-25-18 - 05-25-18 I	201805314399	5/30/2018	9.53
			100962703: 04-25-18 - 05-25-18	400-650-630	9.53	
01-21506	ENTERGY	146531	101379923: 04-24-18 - 05-25-18 I	201805314400	5/30/2018	35.88
			101379923: 04-24-18 - 05-25-18	001-201-684	35.88	
01-21506	ENTERGY	146532	123468100; 04-25-18 - 05-25-18 I	201805314401	5/30/2018	25.06
			123468100; 04-25-18 - 05-25-18	001-201-684	25.06	
01-21506	ENTERGY	146533	123468233: 04-24-18 - 05-25-18 I	201805314402	5/30/2018	28.29
			123468233: 04-24-18 - 05-25-18	001-201-684	28.29	
01-21506	ENTERGY	146534	123468522: 04-24-18 - 05-25-18 I	201805314403	5/30/2018	32.13
			123468522: 04-24-18 - 05-25-18	001-201-684	32.13	
01-21506	ENTERGY	146535	125345488: 04-25-18 - 05-25-18 I	201805314404	5/30/2018	51.14
			125345488: 04-25-18 - 05-25-18	001-201-684	51.14	
01-21506	ENTERGY	146536	148884364: 04-25-18 - 05-23-18 I	201805314405	5/30/2018	1,264.40
			148884364: 04-25-18 - 05-23-18	001-201-684	1,264.40	
01-21506	ENTERGY	146537	17002775: 04-25-18 - 05-25-18 I	201805314406	5/30/2018	12.73
			17002775: 04-25-18 - 05-25-18	400-650-630	12.73	

VENDOR NUMBER	NAME	DOCKET NUMBER	COMMENT	INVOICE NUMBER	DATE	AMOUNT
01-21506	ENTERGY	146538	47143144: 04-24-18 - 05-23-18	I 201805314407	5/30/2018	32.35
			47143144: 04-24-18 - 05-23-18	400-650-630	32.35	
01-21506	ENTERGY	146539	47143193: 04-24-18 - 05-23-18	I 201805314408	5/30/2018	79.69
			47143193: 04-24-18 - 05-23-18	400-650-630	79.69	
01-21506	ENTERGY	146540	74592635: 04-26-18 - 05-24-18	I 201805314409	5/30/2018	90.77
			74592635: 04-26-18 - 05-24-18	400-650-630	90.77	
01-21506	ENTERGY	146541	75485649: 04-25-18 - 05-23-18	I 201805314410	5/30/2018	11.31
			75485649: 04-25-18 - 05-23-18	001-201-684	11.31	
01-21506	ENTERGY	146542	78293693: 04-25-18 - 05-25-18	I 201805314411	5/30/2018	82.68
			78293693: 04-25-18 - 05-25-18	001-201-684	82.68	
01-21506	ENTERGY	146543	82141797: 04-24-18 - 05-24-18	I 201805314412	5/30/2018	86.85
			82141797: 04-24-18 - 05-24-18	001-201-684	86.85	
01-02231	EWING IRRIGATION PRODUCTS	146544	IRRIGATION SUPPLIES	I 5302730	5/09/2018	1,255.80
			HUNTER ULTRA 1 INST	001-340-575	902.88	
			IRRIGATION HEAD	001-340-575	139.60	
			RAINBIRD VARIABLE	001-340-575	36.65	
			PVC CMNT	001-340-575	15.17	
			PIPE CLEANER	001-340-575	8.70	
			RISER EXTENSION	001-340-575	25.82	
			ADJ ROTOR	001-340-575	126.98	
01-02231	EWING IRRIGATION PRODUCTS	146545	IRRIGATION	I 5348419	5/15/2018	432.38
			IRRIGATION HEADS	001-340-575	41.90	
			RISERS	001-340-575	28.83	
			IRRIGATION HEADS	001-340-575	361.65	
01-03416	EXPERTS-EXCHANGE, LLC	146546	RENEWAL	I 0009058490	5/04/2018	249.00
			RENEWAL	001-042-686	249.00	
01-05408	JIMMY FINNEGAN	146547	ADV TRAV: 06-10-18 - 06-15-18	I 201805314413	5/10/2018	235.75
			ADV TRAV: 06-10-18 - 06-15-18	001-100-610	235.75	
01-00595	FLEET PRIDE	146548	TRUCKS PARTS	I 94349150	5/16/2018	23.36
			SEAL KIT	400-650-632	23.36	
01-23750	FORESTRY SUPPLIERS INC	146549	WATER DEPT SUPPLIES	I 336541-00	4/12/2018	248.50
			SHARP SHOOTER SHOVEL	400-650-540	115.50	
			ROUND POINT SHOVEL	400-650-540	133.00	
01-23750	FORESTRY SUPPLIERS INC	146550	WATER DEPT SUPPLIES	I 336541-01	5/08/2018	38.50
			SHARP SHOOTER SHOVEL	400-650-540	38.50	
01-23750	FORESTRY SUPPLIERS INC	146551	SUPPLIES	I 350673-00	5/08/2018	1,055.00
			PROBING RODS	001-201-540	97.00	
			SPRAYER 3 GAL	001-201-540	151.50	

VENDOR NUMBER	NAME	DOCKET NUMBER	COMMENT	INVOICE NUMBER	DATE	AMOUNT	
01-23750	FORESTRY SUPPLIERS INC	146551	SUPPLIES	I 350673-00	5/08/2018	1,055.00	CONT
			SHARP SHOOTER	001-201-540	94.00		
			ORANGE SAFETY TAPE	001-201-540	39.60		
			2GALL GAS CAN	001-201-540	167.90		
			GATORADE	001-201-540	505.00		
01-24500	FUELMAN OF MS-#127779	146552	127779; 5/7/2018 - 5/13/2018	I NP53273304	5/14/2018	37.97	
			127779; 5/7/2018 - 5/13/2018	001-092-525	37.97		
01-24500	FUELMAN OF MS-#127779	146553	127779; 5/14/2018 - 5/20/2018	I NP53307637	5/21/2018	84.45	
			127779; 5/14/2018 - 5/20/2018	001-092-525	54.49		
			127779; 5/14/2018 - 5/20/2018	001-093-525	29.96		
01-24500	FUELMAN OF MS-#127779	146554	127779; 5/21/2018 - 5/27/2018	I NP53345748	5/28/2018	51.90	
			127779; 5/21/2018 - 5/27/2018	001-092-525	51.90		
01-01867	FUELMAN OF MS-#127780	146555	127780; 5/7/2018 - 5/13/2018	I NP53273305	5/14/2018	2,213.25	
			127780; 5/7/2018 - 5/13/2018	001-201-525	1,498.04		
			127780; 5/7/2018 - 5/13/2018	400-650-525	715.21		
01-01867	FUELMAN OF MS-#127780	146556	127780; 5/14/2018 - 5/20/2018	I NP53307638	5/21/2018	2,073.83	
			127780; 5/14/2018 - 5/20/2018	001-201-525	1,069.23		
			127780; 5/14/2018 - 5/20/2018	400-650-525	945.45		
			127780; 5/14/2018 - 5/20/2018	404-650-525	59.15		
01-01867	FUELMAN OF MS-#127780	146557	127780: 05-21-18 - 05-27-18	I NP53345749	5/28/2018	1,889.67	
			127780: 05-21-18 - 05-27-18	001-201-525	1,021.44		
			127780: 05-21-18 - 05-27-18	400-650-525	817.79		
			127780: 05-21-18 - 05-27-18	404-650-525	50.44		
01-01868	FUELMAN OF MS-#127781	146558	127781; 5/07/2018 - 5/13/2018	I NP53273306	5/14/2018	504.95	
			127781; 5/07/2018 - 5/13/2018	001-160-525	504.95		
01-01868	FUELMAN OF MS-#127781	146559	127781; 5/14/2018 - 5/20/2018	I NP53307639	5/21/2018	577.36	
			127781; 5/14/2018 - 5/20/2018	001-160-525	577.36		
01-01869	FUELMAN OF MS-#127782	146560	127782; 5/07/2018-5/13/2018	I NP53273307	5/14/2018	155.46	
			127782; 5/07/2018-5/13/2018	001-180-525	155.46		
01-01869	FUELMAN OF MS-#127782	146561	127782; 5/14/2018 - 5/20/2018	I NP53307640	5/21/2018	157.48	
			127782; 5/14/2018 - 5/20/2018	001-180-525	157.48		
01-01869	FUELMAN OF MS-#127782	146562	127782; 5/21/2018 - 5/27/2018	I NP53345751	5/28/2018	115.64	
			127782; 5/21/2018 - 5/27/2018	001-180-525	115.64		
01-01870	FUELMAN OF MS-#127783	146563	127783; 5/7/18 - 5/13/18	I NP53273308	5/14/2018	3,491.29	
			127783; 5/7/18 - 5/13/18	001-100-525	3,491.29		
01-01870	FUELMAN OF MS-#127783	146564	127783; 5/14/2018 - 5/20/2018	I NP53307641	5/21/2018	3,386.46	
			127783; 5/14/2018 - 5/20/2018	001-100-525	3,386.46		
01-01870	FUELMAN OF MS-#127783	146565	127783; 5/21/2018 - 5/27/2018	I NP53345752	5/21/2018	3,612.43	

VENDOR NUMBER	NAME	DOCKET NUMBER	COMMENT	INVOICE NUMBER	DATE	AMOUNT	
01-01870	FUELMAN OF MS-#127783	146565	127783; 5/21/2018 - 5/27/2018	I NP53345752	5/21/2018	3,612.43	CONT
			127783; 5/21/2018 - 5/27/2018	001-100-525	3,612.43		
01-01871	FUELMAN OF MS-#127785	146566	127785; 5/7/18 - 5/13/18	I NP53273309	5/14/2018	97.83	
			127785; 5/7/18 - 5/13/18	001-340-525	97.83		
01-01871	FUELMAN OF MS-#127785	146567	127785; 5/14/2018 - 5/20/2018	I NP53307642	5/21/2018	41.25	
			127785; 5/14/2018 - 5/20/2018	001-340-525	41.25		
01-01871	FUELMAN OF MS-#127785	146568	127785; 5/21/2018 - 5/27/2018	I NP53345753	5/28/2018	100.22	
			127785; 5/21/2018 - 5/27/2018	001-340-525	100.22		
01-24935	GATEWAY TIRE & SERVICE CE	146569	FD-UNIT 2	I IA02103006	5/08/2018	600.55	
			TIRES	001-160-632	462.60		
			MOUNT & BALANCE	001-160-632	40.00		
			NITRO AIR FILL	001-160-632	10.00		
			TIRE DISPOSAL FEE	001-160-632	12.00		
			ALIGNMENT	001-160-632	69.95		
			SHOP SUPPLIES	001-160-632	2.00		
			TIRE TAX	001-160-632	4.00		
01-24935	GATEWAY TIRE & SERVICE CE	146570	MOUNT AND BALANCE 5 TIRES	I IA02107957	5/15/2018	82.50	
			MOUNT AND BALANCE 5 TIRES	001-100-632	82.50		
01-24935	GATEWAY TIRE & SERVICE CE	146571	MOUNT BALANCE 2 TIRESP324	I IA02115678	5/25/2018	24.00	
			MOUNT BALANCE 2 TIRESP324	001-100-632	24.00		
01-00111	CHUCK GAUTIER	146572	ADV TRAV: 06-24-18 - 06-28-18	I 201805314414	5/15/2018	436.31	
			ADV TRAV: 06-24-18 - 06-28-18	001-020-610	436.31		
01-02190	GILL, SHIRLEY	146573	MAY 21, 2018 MEETING	I 052118	5/21/2018	50.00	
			MAY 21, 2018 MEETING	001-093-611	50.00		
01-26200	GRAINGER, W W INC	146574	AIR FILTERS	I 9775698724	5/02/2018	93.27	
			5C450 AIR FILTERS	001-201-540	66.24		
			4JG43 DOOR STOP	001-201-540	27.03		
01-26200	GRAINGER, W W INC	146575	CAPACITOR	I 9789871846	5/16/2018	105.12	
			CAPACTIOR	400-650-575	105.12		
01-26200	GRAINGER, W W INC	146576	72X48 CHAIR MAT - CID	I 9791652713	5/17/2018	148.05	
			72X48 CHAIR MAT - CID	001-100-540	148.05		
01-00644	GREEN EARTH PRODUCTS	146577	TUFF JOB TOWELS	I 41222	5/08/2018	328.76	
			TUFF JOB TOWELS	001-201-540	328.76		
01-01348	GREGORY, JAMES EDWIN III	146578	6 GAMES @ $25.00; MAY 8 & 10	I 201805294341	5/10/2018	150.00	
			6 GAMES @ $25.00; MAY 8 & 10	001-340-690	150.00		
01-01348	GREGORY, JAMES EDWIN III	146579	3 GAMES @ $25.00; MAY 17	I 201805294342	5/17/2018	75.00	
			3 GAMES @ $25.00; MAY 17	001-340-690	75.00		

VENDOR NUMBER	NAME	DOCKET NUMBER	COMMENT	INVOICE NUMBER	DATE	AMOUNT
01-01348	GREGORY, JAMES EDWIN III	146580	5 GAMES @ $25.00; MAY 22 & 24	I 201805294343	5/24/2018	125.00
			5 GAMES @ $25.00; MAY 22 & 24	001-340-690	125.00	
01-00442	HACH COMPANY	146581	CHLORINE REAGENT	I 10953716	5/09/2018	1,035.71
			CHLORINE REAGENT	400-650-575	183.00	
			FLUORIDE REAGENT	400-650-575	783.00	
			FREIGHT	400-650-575	69.71	
01-02909	HAMLIN, WESLEY N	146582	ADV TRAV: 06-24-18 - 06-28-18	I 201805314415	5/15/2018	436.31
			ADV TRAV: 06-24-18 - 06-28-18	001-020-610	436.31	
01-27765	HARCROS CHEMICALS INC	146583	150lb CHLORINE	I 770106381	5/04/2018	2,974.00
			150lb CHLORINE	400-650-575	1,170.00	
			SODIUM FLUORIDE	400-650-575	1,804.00	
01-27765	HARCROS CHEMICALS INC	146584	150lb CHLORINE	I 770106422	5/09/2018	600.00
			1 TON CHLORINE	400-650-575	600.00	
01-05405	MELISSA HARDIN	146585	REMITTANCE OF RESTITUTION	I 201805314417	5/15/2018	2.56
			REMITTANCE OF RESTITUTION	001-000-122	2.56	
01-04898	HARRIS TIRE COMPANY	146586	P215/70-16 TIRES	I 1972137	5/14/2018	240.00
			P215/70-16 TIRES	001-201-632	240.00	
01-00393	HAYLES TOWING & RECOVERY	146587	TOW FEE TRUCK TO SHOP	I 211678	4/18/2018	225.00
			TOW FEE TRUCK TO SHOP	400-650-632	225.00	
01-29190	HEARD, KEN	146588	ADV TRAV: 06-24-18 - 06-28-18	I 201805314419	5/15/2018	436.31
			ADV TRAV: 06-24-18 - 06-28-18	001-020-610	436.31	
01-04406	HEATH, VICKI	146589	MAY 21, 2018 MEETING	I 052118	5/21/2018	50.00
			MAY 21, 2018 MEETING	001-093-611	50.00	
01-30000	HILLARD, MARVIN	146590	VACUUM MANHOLE	I 201805184308	5/08/2018	370.00
			VACUUM MANHOLE	400-650-603	370.00	
01-30000	HILLARD, MARVIN	146591	VACUUM MANHOLE	I 201805184309	5/02/2018	465.00
			VACUUM LIFT STATION	400-650-603	465.00	
01-30000	HILLARD, MARVIN	146592	VACUUM SERVICE	I 201805214311	5/17/2018	620.00
			VACUUM SERVICE	400-650-603	620.00	
01-04700	HODGES, JEFFREY	146593	9 GAMES @ $10.00; MAY 7,8 & 10	I 201805294338	5/10/2018	90.00
			9 GAMES @ $10.00; MAY 7,8 & 10	001-340-690	90.00	
01-04700	HODGES, JEFFREY	146594	6 GAMES @ $10.00; MAY 14 & 17	I 201805294339	5/17/2018	60.00
			6 GAMES @ $10.00; MAY 14 & 17	001-340-690	60.00	
01-04700	HODGES, JEFFREY	146595	8GAMES@ $10.00; MAY 21, 22 &24	I 201805294340	5/24/2018	80.00
			8GAMES@ $10.00; MAY 21, 22 &24	001-340-690	80.00	

VENDOR NUMBER	NAME	DOCKET NUMBER	COMMENT	INVOICE NUMBER	DATE	AMOUNT
01-00492	HOLDER, KEVIN	146596	ADV TRAV: 06-24-18 - 06-28-18	I 201805314418	5/15/2018	436.31
			ADV TRAV: 06-24-18 - 06-28-18	001-020-610	436.31	
01-04622	HOLLY, SALLY M.	146597	MAY 2018	I 201805314416	5/31/2018	1,040.00
			MAY 2018	001-340-690	1,040.00	
01-30599	HOLMES COMM COLLEGE	146598	FD-ALEX GREGORY	I 101K	5/07/2018	201.00
			EMS FEES	001-160-681	201.00	
01-31475	HUTTO'S	146599	CENTIPEDE SOD	I 300075	5/09/2018	209.00
			CENTIPEDE SOD	400-650-575	209.00	
01-31600	HYDRAULIC SERVICE & SUPPL	146600	PISTON RING	I 113416	5/16/2018	12.91
			PISTON RING	400-650-635	12.91	
01-32050	ILLINOIS CENTRAL RAILROAD	146601	8" SEWER PIPELINE	I 9500185867	5/02/2018	50.00
			8" SEWER PIPELINE	400-650-660	50.00	
01-02386	INTERNATIONAL CODE COUNCI	146602	MEMBERSHIP DUES	I 3195703	5/08/2018	135.00
			MEMBERSHIP DUES	001-180-686	135.00	
01-00905	INTERSTATE ALL BATTERY CE	146603	FD-CAMERA BATTERIES	I 1902501025587	5/21/2018	69.99
			CAMERA BATTERIES	001-160-635	10.00	
			FLASHLIGHT	001-160-635	45.00	
			FLASHLIGHT	001-160-635	14.99	
01-00905	INTERSTATE ALL BATTERY CE	146604	FD-R1	I 1902502029918	5/07/2018	139.99
			STINGER	001-160-540	139.99	
01-00905	INTERSTATE ALL BATTERY CE	146605	BATTERIES	I 1902502030001	5/15/2018	39.18
			9V BATTERY	001-340-540	25.20	
			8.4V BATTERY	001-340-540	13.98	
01-32675	INTERSTATE BATTERY SYSTEM	146606	BATTRIES	C 689261	5/08/2018	46.00CR
			CREDIT FOR AT CORE	400-650-632	18.00CR	
			CREDIT FOR LTCORE	400-650-632	28.00CR	
01-32675	INTERSTATE BATTERY SYSTEM	146607	BATTRIES	I 689228	5/07/2018	280.90
			MTP 65 BATTERY	400-650-632	117.95	
			31P-MHD BATTERY	400-650-632	116.95	
			AT CORE	400-650-632	18.00	
			LT CORE	400-650-632	28.00	
01-32950	INTOXIMETERS INC	146608	FST ALCO SENSOR STRAWS	I 596426	5/11/2018	146.25
			FST ALCO SENSOR STRAWS	001-100-540	125.00	
			SHIPPING	001-100-540	21.25	
01-04057	ITSAVVY	146609	IPHONE SCREEN PROTECTOR	I 01029863	5/10/2018	16.78
			IPHONE SCREEN PROTECTOR	001-042-501	16.78	
01-04057	ITSAVVY	146610	KEYBOARD & MOUSE	I 01030160	5/11/2018	73.18

VENDOR NUMBER	NAME		DOCKET NUMBER	COMMENT	INVOICE NUMBER	DATE	AMOUNT	
01-04057	ITSAVVY		146610	KEYBOARD & MOUSE	I 01030160	5/11/2018	73.18	CONT
				LOGITECH KEYBOARD	001-093-540	48.23		
				LOGITECH MOUSE M310	001-093-540	24.95		
01-04057	ITSAVVY		146611	MOPHIE CASE FOR MIS	I 01031593	5/18/2018	100.02	
				MOPHIE CASE	001-042-501	65.96		
				SCREEN PROTECTORS	001-042-501	34.06		
01-04057	ITSAVVY		146612	EATON UPS	I 01031662	5/18/2018	170.80	
				EATON UPS	001-100-501	170.80		
01-04057	ITSAVVY		146613	MOPHIE BELT CLIPS	I 01031871	5/21/2018	48.22	
				MOPHIE BELT CLIPS	001-042-501	48.22		
01-04057	ITSAVVY		146614	WIRELESS KEYBOARD	I 01032017	5/21/2018	25.18	
				LOGITECH KEYBOARD	001-040-540	25.18		
01-33385	JACKSON DATA PRODUCTS	IN	146615	PL PAPER, PENS, SIGNAGE	I 0084634-001	5/15/2018	18.13	
				PENTEL ENERGEL 0.5MM	001-040-500	12.55		
				PEN REFILLS	001-040-500	5.58		
01-33385	JACKSON DATA PRODUCTS	IN	146616	PL PAPER, PENS, SIGNAGE	I 0084782-001	5/18/2018	56.14	
				PL STATIONARY 8.5X11	001-040-500	56.14		
01-33385	JACKSON DATA PRODUCTS	IN	146617	PL PAPER, PENS, SIGNAGE	I 0100813	5/15/2018	34.25	
				HALLWAY SIGN	001-040-500	34.25		
01-33385	JACKSON DATA PRODUCTS	IN	146618	WATER QUALITY BROCHURES	I 0100845	5/21/2018	302.09	
				WATER QUALITY BROCHURES	400-650-604	302.09		
01-33800	JACKSON PAPER COMPANY		146619	COPY PAPER	I 1063023	5/02/2018	596.59	
				8.5X11 COPY PAPER	001-180-540	256.11		
				11X17 COPY PAPER	400-650-500	84.36		
				8.5X11 COPY PAPER	400-650-500	256.12		
01-33800	JACKSON PAPER COMPANY		146620	COPY PAPER	I 1063263	5/03/2018	2.57	
				8.5X11 COPY PAPER	001-180-540	1.29		
				8.5X11 COPY PAPER	400-650-500	1.28		
01-33800	JACKSON PAPER COMPANY		146621	JANITORIAL SUPPLIES	I 1064070	5/07/2018	228.82	
				TOILET TISSUE	001-350-510	96.00		
				FOAM HAND CLEANSER	001-350-510	91.50		
				ROLL PAPERTOWEL	001-350-510	41.32		
01-33800	JACKSON PAPER COMPANY		146622	FD-COPY PAPER	I 1065153	5/15/2018	128.70	
				COPY PAPER	001-160-500	128.70		
01-33800	JACKSON PAPER COMPANY		146623	WHITE COPY PAPER	I 1066181	5/22/2018	514.80	
				WHITE COPY PAPER	001-010-500	514.80		
01-04945	JACKSON, DIANE		146624	MAY 21, 2018 MEETING	I 052118	5/21/2018	50.00	
				MAY 21, 2018 MEETING	001-093-611	50.00		

VENDOR NUMBER	NAME	DOCKET NUMBER	COMMENT	INVOICE NUMBER	DATE	AMOUNT
01-04904	JACKSON, SHELIA	146625	MAY 21, 2018 MEETING	I 052118	5/21/2018	50.00
			MAY 21, 2018 MEETING	001-093-611	50.00	
01-05137	JCPENNY	146626	REMITTANCE OF RESTITUTION	I 201805314420	5/15/2018	600.00
			REMITTANCE OF RESTITUTION	001-000-122	600.00	
01-00973	KIMBALL MIDWEST	146627	SHOP SUPPLIES	I 6342897	5/10/2018	496.23
			NUT SERT	001-201-540	19.75	
			#4 HOSE CLAMP	400-650-540	5.80	
			4" TIES	400-650-540	7.61	
			BLUE PAINT	400-650-540	221.28	
			BLACK PAINT	400-650-540	93.72	
			BATT ENDS	400-650-540	34.91	
			PINS	400-650-540	8.06	
			STRAPS	400-650-540	4.47	
			7/16 DRILL BIT	400-650-540	57.51	
			29/64 DRILL BIT	400-650-540	43.12	
01-04651	KWIK COVERS LLC	146628	TABLE CLOTHS	I 86294	5/09/2018	739.08
			TABLE CLOTHS	001-340-540	650.00	
			SHIPPING	001-340-540	89.08	
01-04561	LAMPTON LOVE GAS COMPANY,	146629	PROPANE-TOWER GENERATOR	I 943954	4/12/2018	151.19
			PROPANE-TOWER GENERATOR	001-100-525	146.24	
			REGULATORY FEE	001-100-525	4.95	
01-02334	LATHAM, RITA	146630	MAY 2018	I 201805314422	5/31/2018	350.00
			MAY 2018	001-340-690	350.00	
01-05402	LEE TRACTOR CO OF MISS IN	146631	BRACKHOE PArts	I PJ00006	5/15/2018	175.68
			PACKING KIT	400-650-635	117.12	
			DOOR SHOCK	400-650-635	58.56	
01-05216	WILLIAM B. LEE	146632	ADV TRAV: 06-24-18 - 06-28-18	I 201805314423	5/15/2018	436.31
			ADV TRAV: 06-24-18 - 06-28-18	001-020-610	436.31	
01-38275	LEWIS ELECTRIC INC	146633	MODIFY PULL BOX	I M2018.34	5/08/2018	1,800.00
			MODIFY PULL BOX	317-601-750	1,800.00	
01-02576	LINCOLN NATIONAL LIFE INS	146634	502251: JUNE 2018	I 201805314421	5/31/2018	4,332.50
			502251: JUNE 2018	001-010-480	155.82	
			502251: JUNE 2018	001-020-480	50.43	
			502251: JUNE 2018	001-040-480	178.82	
			502251: JUNE 2018	001-040-480	25.50	
			502251: JUNE 2018	001-092-480	13.38	
			502251: JUNE 2018	001-040-480	25.50	
			502251: JUNE 2018	001-100-480	1,413.35	
			502251: JUNE 2018	001-160-480	1,025.78	
			502251: JUNE 2018	001-180-480	234.43	
			502251: JUNE 2018	001-201-480	472.68	
			502251: JUNE 2018	001-340-480	263.09	

VENDOR NUMBER	NAME	DOCKET NUMBER	COMMENT	INVOICE NUMBER	DATE	AMOUNT	
01-02576	LINCOLN NATIONAL LIFE INS	146634	502251: JUNE 2018	I 201805314421	5/31/2018	4,332.50	CONT
			502251: JUNE 2018	005-101-480	36.79		
			502251: JUNE 2018	400-650-480	409.93		
			502251: JUNE 2018	404-650-480	27.00		
01-01975	LIVE OAK PSYCHOLOGICAL AS	146635	PSYCHOLOGICAL TESTING	I 201805314424	5/21/2018	300.00	
			PSYCHOLOGICAL TESTING	001-100-604	300.00		
01-05199	LOVETT III, FRED R	146636	POLYGRAPH - JOSHUA GASKIN	I 1005	5/15/2018	200.00	
			POLYGRAPH - JOSHUA GASKIN	001-100-604	200.00		
01-02031	LOWE'S BUSINESS ACCOUNT	146637	FD-CABINET	I 13672	5/09/2018	110.67	
			MEDICAL CABINET	001-160-540	110.67		
01-02031	LOWE'S BUSINESS ACCOUNT	146638	EVIDENCE FRIDGE	I 14947	5/24/2018	138.57	
			EVIDENCE FRIDGE	001-100-540	138.57		
01-02031	LOWE'S BUSINESS ACCOUNT	146639	GARDEN MULCH	I 20786	5/22/2018	55.80	
			GARDEN MULCH	001-201-540	55.80		
01-02031	LOWE'S BUSINESS ACCOUNT	146640	FD - DIVE	I 23842	5/22/2018	135.67	
			PVC	001-160-540	14.71		
			SOCKET SET	001-160-540	21.82		
			SOCKET	001-160-540	8.15		
			LINESMAN PLIERS	001-160-540	11.38		
			BIT DRIVER	001-160-540	4.72		
			1/4 IN SPINNER	001-160-540	17.06		
			SOCKET RAILS	001-160-540	15.14		
			10MM WRENCH	001-160-540	11.37		
			8MM WRENCH	001-160-540	15.18		
			CABLE CUTTERS	001-160-540	16.14		
01-05221	LYNN, RANDALL	146641	MAY 22, 2018 MEETING	I 052218	5/22/2018	50.00	
			MAY 22, 2018 MEETING	001-180-611	50.00		
01-04824	MAC HAIK CHRYSLER DODGE J	146642	P309 WIRING REPAIR	I 334374	5/14/2018	356.02	
			FRONT INNER SEATBELT	001-100-632	70.10		
			LABOR	001-100-632	253.56		
			SHOP SUPPLY CHARGES	001-100-632	32.36		
01-04824	MAC HAIK CHRYSLER DODGE J	146643	P309 WIRING REPAIR	I 5030223	5/15/2018	52.57	
			FRONT INNER SEATBELT	001-100-632	52.57		
01-02372	MAC'S FRESH MARKET	146644	CWC LUNCH	I 201805114305	4/30/2018	294.36	
			CWC LUNCH	001-201-540	284.58		
			CWC LUNCH	001-201-540	9.78		
01-40800	MADISON COUNTY DISTRICT A	146645	CREDIT FOR OVERPAYMENT	C 201805314425	3/29/2018	46.60CR	
			CREDIT FOR OVERPAYMENT	103-000-111	46.60CR		
01-40800	MADISON COUNTY DISTRICT A	146646	FORFEITURE CASE: 2017002043	I 201805314426	5/30/2018	300.00	
			FORFEITURE CASE: 2017002043	103-000-111	300.00		

VENDOR NUMBER	NAME	DOCKET NUMBER	COMMENT	INVOICE NUMBER	INVOICE DATE	AMOUNT
01-03554	MADISON SOUTH RUBBISH LAN	146647	LANDFIELD CHARGE	I 11736	4/10/2018	1,692.00
			12 CUBIC YARDS	001-201-683	462.00	
			6 CUBIC YARDS	001-201-683	1,089.00	
			HOST FEE	001-201-683	70.50	
			ENVIRONMENTAL FEE	001-201-683	70.50	
01-03554	MADISON SOUTH RUBBISH LAN	146648	LANDFIELD CHARGE	I 11758	4/16/2018	1,404.00
			12 CUBIC DUMP FEE	001-201-683	198.00	
			6 CUBIC DUMP FEE	001-201-683	1,089.00	
			HOST FEE	001-201-683	58.50	
			ENVIRONMENTAL FEE	001-201-683	58.50	
01-03554	MADISON SOUTH RUBBISH LAN	146649	LANDFIELD CHARGE	I 11783	4/23/2018	432.00
			12 CUBIC DUMP FEE	001-201-683	330.00	
			6 CUBIC DUMP FEE	001-201-683	66.00	
			HOST FEE	001-201-683	18.00	
			ENVIRONMENTAL FEE	001-201-683	18.00	
01-03554	MADISON SOUTH RUBBISH LAN	146650	LANDFIELD CHARGE	I 11808	4/30/2018	720.00
			12 CUBIC DUMP FEE	001-201-683	660.00	
			HOST FEE	001-201-683	30.00	
			ENVIRONMENTAL FEE	001-201-683	30.00	
01-03554	MADISON SOUTH RUBBISH LAN	146651	LANDFIELD CHARGE	I 11832	5/07/2018	972.00
			12 CUBIC DUMP FEE	001-201-683	528.00	
			6 CUBIC DUMP FEE	001-201-683	363.00	
			HOST FEE	001-201-683	40.50	
			ENVIRONMENTAL FEE	001-201-683	40.50	
01-05253	MAGEE-PRAYTOR, LYNETTE	146652	MAY 22, 2018 MEETING	I 052218	5/22/2018	50.00
			MAY 22, 2018 MEETING	001-180-611	50.00	
01-03880	MALONE, DOUGLAS	146653	MAY 21, 2018 MEETING	I 052118	5/21/2018	50.00
			MAY 21, 2018 MEETING	001-093-611	50.00	
01-42310	MARS MARKETING PROMOTIONA	146654	CENTURY RIDE	I 35273	5/04/2018	3,276.60
			MEDALS	001-340-650	2,952.60	
			SET UP MEDALS	001-340-650	195.00	
			SHIPPING	001-340-650	129.00	
01-42310	MARS MARKETING PROMOTIONA	146655	CENTURY RIDE	I 35310	5/04/2018	966.63
			KEYCHAIN	001-340-650	892.50	
			KEYCHAIN SET UP	001-340-650	45.00	
			SHIPPING	001-340-650	29.13	
01-42310	MARS MARKETING PROMOTIONA	146656	CENTURY RIDE	I 35316	5/10/2018	3,880.43
			TECH BAG	001-340-650	3,592.50	
			TECH BAG SET UP	001-340-650	45.00	
			SHIPPING	001-340-650	242.93	
01-42310	MARS MARKETING PROMOTIONA	146657	CENTURY RIDE	I 35321	5/10/2018	2,383.19

VENDOR NUMBER	NAME	DOCKET NUMBER	COMMENT	INVOICE NUMBER	DATE	AMOUNT	
01-42310	MARS MARKETING PROMOTIONA	146657	CENTURY RIDE	I 35321	5/10/2018	2,383.19	CONT
			POWER CORD	001-340-650	2,268.65		
			SET UP	001-340-650	45.00		
			SHIPPING	001-340-650	69.54		
01-42310	MARS MARKETING PROMOTIONA	146658	BANNER	I 35340	5/17/2018	450.00	
			BANNER	001-340-650	435.00		
			SHIPPING	001-340-650	15.00		
01-42480	MARTINSON'S GARDEN WORKS	146659	TREES AND SHRUBS	I 23159	5/01/2018	5,254.23	
			SWEET GUM	007-410-540	2,874.77		
			BLUE POINT JUNIPER	007-410-540	179.97		
			WAX MYRTLE	007-410-540	124.99		
			ELMS	007-410-540	499.96		
			CRAPE MYRTLE	007-410-540	1,199.80		
			BRADFORD PEAR	007-410-540	124.99		
			MUSHROOM COMPOST	007-410-540	249.75		
01-42480	MARTINSON'S GARDEN WORKS	146660	ROSE PLANTS	I 23168	5/09/2018	1,374.45	
			ROSE PLANTS	001-201-540	1,374.45		
01-42480	MARTINSON'S GARDEN WORKS	146661	TREES AND SHRUBS	I 23169	5/10/2018	250.00	
			30 GAL ZELKOVIA	007-410-540	250.00		
01-05239	MAURICE'S	146662	REMITTANCE OF RESTITUTION:	I 201805314429	5/15/2018	200.00	
			REMITTANCE OF RESTITUTION:	001-000-122	200.00		
01-01984	MCDONALD DIRT WORKS	146663	LOADS OF TOP SOIL	I 533680	5/16/2018	3,750.00	
			LOADS OF TOP SOIL	400-650-575	3,750.00		
01-42882	MCGRAW GOTTA-GO	146664	TOILETS	I 17120B	5/04/2018	2,225.00	
			TOILETS	001-340-650	1,500.00		
			HANDWASH STATION	001-340-650	125.00		
			DELIVERY/PICK UP	001-340-650	600.00		
01-42882	MCGRAW GOTTA-GO	146665	HHWD TOILETS	I 17186B	5/11/2018	235.00	
			TOILET	001-340-650	85.00		
			HANDWASH STATION	001-340-650	125.00		
			DELIVERY	001-340-650	25.00		
01-42885	MCGRAW RENTAL AND SUPPLY	146666	SEALANT	I 430342.1.1	5/07/2018	43.35	
			SEALANT	001-201-540	43.35		
01-42885	MCGRAW RENTAL AND SUPPLY	146667	6" FRENCH PIPE	I 431020.1.1	5/15/2018	180.00	
			6" FRENCH PIPE	400-650-575	180.00		
01-42885	MCGRAW RENTAL AND SUPPLY	146668	FITTINGS	I 431158.1.1	5/16/2018	11.53	
			PARTS	400-650-635	11.53		
01-42975	MEL LUNA SAW COMPANY	146669	MOWER TIRE	I 86232	5/03/2018	206.87	
			MOWER TIRE	001-201-635	206.87		

VENDOR NUMBER	NAME	DOCKET NUMBER	COMMENT	INVOICE NUMBER	DATE	AMOUNT
01-42975	MEL LUNA SAW COMPANY	146670	BELT	I 86270	5/10/2018	148.65
			BELT	001-201-635	148.65	
01-42975	MEL LUNA SAW COMPANY	146671	REPAIR LAWNMOWER	I 86324	5/21/2018	373.70
			25-2 WEEDEATER HEAD	001-201-540	116.00	
			25-2 SPOOL	001-201-540	21.90	
			MIX OIL 1GAL.	001-201-540	55.00	
			.095 WEEDEATER STRIN	001-201-540	65.90	
			IDLER PULLEY	001-201-635	25.00	
			BELT	001-201-635	86.90	
			NUT & BOLT	001-201-635	3.00	
01-02413	METRO ONE, LLC	146672	JUNE - AUG 2018 OPERATIONS	I 351	5/15/2018	5,000.00
			JUNE - AUG 2018 OPERATIONS	001-100-604	5,000.00	
01-44250	MID-SOUTH UNIFORM & SUPPL	146673	GASKIN CLASS A UNIFORM	I 577883	5/25/2018	154.52
			CLASS A SHIRT GASKIN	001-100-535	75.60	
			CLASS A PANTS GASKIN	001-100-535	76.92	
			SEW PATCHES GASKIN	001-100-535	2.00	
01-05399	MILLS, SCANLON, DYE, & PI	146674	SERVICES THROUGH 05-25-18	I 201805314442	5/25/2018	15,697.33
			SERVICES THROUGH 05-25-18	001-180-601	772.25	
			SERVICES THROUGH 05-25-18	001-180-601	9,002.50	
			SERVICES THROUGH 05-25-18	001-060-601	165.00	
			SERVICES THROUGH 05-25-18	001-060-601	1,520.36	
			SERVICES THROUGH 05-25-18	001-100-601	187.22	
			SERVICES THROUGH 05-25-18	001-201-601	2,985.00	
			SERVICES THROUGH 05-25-18	362-601-601	825.00	
			SERVICES THROUGH 05-25-18	400-650-601	240.00	
01-00837	MISS CHEMICAL SUPPLY INC	146675	WELL OIL	I 35045	5/03/2018	3,099.50
			WELL OIL	400-650-575	3,099.50	
01-00837	MISS CHEMICAL SUPPLY INC	146676	STOCK SHOP SUPPPLIES	I 35048	5/07/2018	3,196.68
			PARTS WASHER FLUID	001-201-540	899.70	
			1bs OF RED GREASE	001-201-540	599.70	
			DIESEL TREATMENT	001-201-540	239.76	
			BRAKE CLEANER	001-201-540	263.76	
			CARBURATOR CLEANER	001-201-540	270.00	
			MOSQUITO REPELLENT	001-201-540	270.00	
			WASP KILLER	001-201-540	143.76	
			FIREANT KILLER	001-201-540	510.00	
01-00837	MISS CHEMICAL SUPPLY INC	146677	DEGREASER AND CLEANER	I 35051	5/16/2018	2,748.90
			ASPHALT DEGREASER	001-201-575	2,748.90	
01-04591	MISS DEPARTMENT OF PUBLIC	146678	APRIL 2018	I 201805314428	5/10/2018	3,719.86
			APRIL 2018	001-000-118	3,719.86	
01-03495	MISS DEPARTMENT OF REVENU	146679	KIDFEST SALES TAX	I 201805314427	5/31/2018	556.71
			KIDFEST SALES TAX	001-000-104	556.71	

VENDOR NUMBER	NAME	DOCKET NUMBER	COMMENT	INVOICE NUMBER	DATE	AMOUNT
01-00953	MISS INDUSTRIES FOR THE B	146680	OFFICE SUPPLIES	I 0034784-IN	5/03/2018	13.89
			FINGERTIP MOISTENER	001-042-500	6.48	
			WHITE OUT TAPE 2PK	001-042-500	2.64	
			RSVP PENS 12PK	001-042-500	4.77	
01-00953	MISS INDUSTRIES FOR THE B	146681	OFFICE SUPPLY C/S PATROL	I 0034890-IN	5/10/2018	53.72
			SMALL BINDER CLIPS	001-010-540	9.60	
			POST IT FLAGS	001-010-540	15.98	
			USB 8GB FLASH DRIVES	001-100-540	28.14	
01-00953	MISS INDUSTRIES FOR THE B	146682	BUSINESS CARDS-KIM TRAYLO	I 0035005-IN	5/18/2018	34.46
			BUSINESS CARDS	001-040-540	34.46	
01-00953	MISS INDUSTRIES FOR THE B	146683	46X60 CHAIR MAT- NELL	I 0035010-IN	5/21/2018	77.99
			46X60 CHAIR MAT- NELL	001-100-540	77.99	
01-46700	MISS MUNICIPAL CLERKS AND	146684	BALANCE DUE FOR 2018 DUES	I 201805314430	5/31/2018	5.00
			BALANCE DUE FOR 2018 DUES	001-040-686	5.00	
01-47700	MISS STATE FIRE ACADEMY	146685	FD-FI - WILBOURN	I 26104	5/24/2018	640.00
			FIRE INVESTIGATOR	001-160-681	640.00	
01-47890	MISS TENT AND PARTY RENTA	146686	TENT/TABLE/CHAIRS	I 103612	5/07/2018	1,409.50
			TENT	001-340-650	742.50	
			CHAIRS	001-340-650	300.00	
			TABLES	001-340-650	225.00	
			DAMAGE WAIVER	001-340-650	42.00	
			SALES	001-340-650	50.00	
			DELIVERY	001-340-650	50.00	
01-47950	MISS VALLEY ELECTRIC SUPP	146687	SUPPLIES	I S1296289.001	5/29/2018	3,112.59
			SPLICING TAPE	001-340-637	25.95	
			VINYL TAPE	001-340-637	10.14	
			COVER	001-340-637	44.40	
			COVER	001-340-637	5.68	
			COVER	001-340-637	2.99	
			BOX	001-340-637	7.55	
			BLANK COVER	001-340-637	1.69	
			120V BULB	001-340-637	19.16	
			LDCNTR	001-340-637	71.04	
			WRAP 4FT	001-340-637	234.68	
			SPLICE CLEANER	001-340-637	49.50	
			IC AIR TIGHT	001-340-637	8.15	
			HALCO 18W DOUBLE	001-340-637	42.96	
			HALCO DOUBLE 28W	001-340-637	17.16	
			MIDGET FUSE	001-340-637	243.80	
			FUSE	001-340-637	154.00	
			FUSE	001-340-637	190.00	
			SENSOR	001-340-637	64.07	
			CONNECTOR	001-340-637	91.72	
			GFCI	001-340-637	144.00	

VENDOR NUMBER	NAME	DOCKET NUMBER	COMMENT	INVOICE NUMBER	DATE	AMOUNT	
01-47950	MISS VALLEY ELECTRIC SUPP	146687	SUPPLIES	I S1296289.001	5/29/2018	3,112.59	CONT
			CEILING WRAP	001-340-637	39.29		
			HALCO	001-340-637	118.80		
			150WATT BULB	001-340-637	79.14		
			175 WATT	001-340-637	371.07		
			CW/HO/CT	001-340-637	42.72		
			S8420	001-340-637	42.72		
			LED BULB	001-340-637	11.32		
			GRAY FALT COVER	001-340-637	14.34		
			120V QTZ TUBE	001-340-637	69.50		
			GASKET	001-340-637	1.27		
			HO 60HZ	001-340-637	194.24		
			BALLAST	001-340-637	56.96		
			150W 120V	001-340-637	231.52		
			175W MH V5 BAL	001-340-637	387.66		
			SHIPPING/HANDLING	001-340-637	23.40		
01-47950	MISS VALLEY ELECTRIC SUPP	146688	FD-STATION 4	I S1299402.001	5/29/2018	733.11	
			CONDUIT	001-160-637	1.04		
			GASKET	001-160-637	0.72		
			KOBOX	001-160-637	0.83		
			RECEPTACLE	001-160-637	1.56		
			RECEPTACLE COVER	001-160-637	2.43		
			ELBOW	001-160-637	10.83		
			WIRE	001-160-637	73.75		
			SILICONE	001-160-637	19.59		
			FLUSH RECEPTACLE	001-160-637	11.70		
			BOLT ON CB	001-160-637	35.69		
			HAMMER BIT	001-160-637	7.13		
			DPLX RECEPTACLE	001-160-637	2.92		
			CONDUIT	001-160-637	121.83		
			CONDUIT	001-160-637	70.35		
			T12 BULBS	001-160-637	68.40		
			T8 BULBS	001-160-637	70.80		
			6 THHN WIRE	001-160-637	101.03		
			8 THHN WIRE	001-160-637	34.36		
			4 SQ BOX	001-160-637	2.68		
			BLANK COVER	001-160-637	0.53		
			EMT STRAP	001-160-637	3.01		
			EMT STRAP	001-160-637	5.19		
			EMT CONN	001-160-637	1.71		
			EMT CONN	001-160-637	4.63		
			EMT CPLG	001-160-637	8.82		
			ALUMD LB COND BODY	001-160-637	4.88		
			RGD LB COND BODY	001-160-637	14.10		
			T8 ELTRN BLST	001-160-637	15.40		
			BULB	001-160-637	37.20		
01-02851	MS BEAVER MGMT	146689	BEAVER CONTROL 2/12-5/12	I 201805184310	5/16/2018	2,625.00	
			BEAVER CONTROL 2/12-5/12	001-201-604	2,625.00		
01-00189	NATCHEZ TRACE PARKWAY ASS	146690	RANGER MONITORING	I 1802157238	5/08/2018	495.00	

VENDOR NUMBER	NAME	DOCKET NUMBER	COMMENT	INVOICE NUMBER	DATE	AMOUNT	
01-00189	NATCHEZ TRACE PARKWAY ASS	146690	RANGER MONITORING	I 1802157238	5/08/2018	495.00	CONT
			RANGER MONITORING	001-340-650	495.00		
01-51700	NATIONAL REGISTRY OF EMTS	146691	FD-PINS & PATCHES	I 40603	4/12/2018	350.00	
			EMT PATCHES	001-160-535	140.00		
			PARAMEDIC PATCHES	001-160-535	140.00		
			EMT PINS	001-160-535	35.00		
			PARAMEDIC PINS	001-160-535	35.00		
01-04482	NEAL, DON	146692	8 GAMES@ $25.00; MAY 7, 8 & 10	I 201805294335	5/10/2018	200.00	
			8 GAMES@ $25.00; MAY 7, 8 & 10	001-340-690	200.00		
01-04482	NEAL, DON	146693	6 GAMES @ $25.00; MAY 14 & 17	I 201805294336	5/17/2018	150.00	
			6 GAMES @ $25.00; MAY 14 & 17	001-340-690	150.00		
01-04482	NEAL, DON	146694	8GAMS@$25&1GAM@$30; 5/21,22,24	I 201805294337	5/24/2018	230.00	
			8GAMS@$25&1GAM@$30; 5/21,22,24	001-340-690	230.00		
01-52050	NEBLETTS FRAME OUTLET	146695	MAYOR'S PORTRAIT FRAME	I 9435	5/21/2018	36.90	
			MAYOR'S PORTRAIT FRAME	001-020-540	36.90		
01-53415	NOVELTY MACHINE WORKS INC	146696	REPAIR HYDRAULIC CYLINDER	I 85299	5/10/2018	694.74	
			REPAIR HYDRAULIC CYLINDER	001-201-635	694.74		
01-01133	O'REILLY AUTO PARTS	146697	DOT 4 BRAKE FLUID P344	I 215690	5/27/2018	9.99	
			DOT 4 BRAKE FLUID P344	001-100-632	9.99		
01-53715	OFFICE PRODUCTS PLUS INC	146698	NAME PLATES	I 830991-0	5/25/2018	31.50	
			NAME PLATES	001-040-540	31.50		
01-04017	OZBORN COMMUNICATIONS, LL	146699	P353 CHARGE GUARD INSTALL	I 20138	5/09/2018	244.00	
			75 AMP RELAY	001-100-632	53.00		
			P353 CHARGE GUARD INSTALL	001-100-632	172.50		
			20AMP LIGHTED SWITCH	001-100-632	18.50		
01-04821	P.R. EVENT MANAGEMENT LLC	146700	SERVICES	I 1135	5/07/2018	4,912.16	
			BALANCE	001-340-650	3,750.00		
			PRINTING	001-340-650	30.00		
			LODGING	001-340-650	812.16		
			BIBS	001-340-650	320.00		
01-04572	PALMER-ALLEN, CARLA	146701	MAY 21, 2018 MEETING	I 052118	5/21/2018	50.00	
			MAY 21, 2018 MEETING	001-093-611	50.00		
01-55168	PENNINGTON & TRIM ALARM S	146702	LIBRARY ALARM SERVICE	I 655386	6/01/2018	55.00	
			OPEN & CLOSING ALARM	001-350-637	60.00		
			LIBRARY ALARM SERVICE	001-350-637	5.00CR		
01-00593	PERFIT INC	146703	MAY 2018	I 201805314432	5/31/2018	480.00	
			MAY 2018	001-340-690	480.00		
01-56001	PHELPS DUNBAR LLP	146704	SERVICES THROUGH 04-25-18	I 1062162	5/17/2018	85.00	

VENDOR NUMBER	NAME	DOCKET NUMBER	COMMENT	INVOICE NUMBER	DATE	AMOUNT	
01-56001	PHELPS DUNBAR LLP	146704	SERVICES THROUGH 04-25-18	I 1062162	5/17/2018	85.00	CONT
			SERVICES THROUGH 04-25-18	001-160-604	85.00		
01-04831	PINE BELT OIL CO	146705	OFF ROAD DIESEL	I 1056715	5/09/2018	3,538.06	
			OFF ROAD DIESEL	001-201-525	2,400.10		
			UNLEAD GAS	001-201-525	1,137.96		
01-01932	PINNACLE TOWERS LLC	146706	JUNE 2018 TOWER RENTAL	I 24690480	6/01/2018	1,831.59	
			JUNE 2018 TOWER RENTAL	005-101-604	1,831.59		
01-04399	PITNEY BOWES GLOBAL FINAN	146707	03-30-18 - 06-29-18 LEASING	I 3306149832	5/16/2018	574.44	
			03-30-18 - 06-29-18 LEASING	001-100-604	574.44		
01-57350	PRASSEL LUMBER COMPANY IN	146708	CONCRETE	I 870248	5/16/2018	167.58	
			CONCRETE	001-201-540	167.58		
01-57350	PRASSEL LUMBER COMPANY IN	146709	CONCRETE	I 870426	5/17/2018	72.90	
			PLATIC ROOF	001-201-540	72.90		
01-57350	PRASSEL LUMBER COMPANY IN	146710	CONCRETE MIX	I 870958	5/23/2018	335.16	
			CONCRETE MIX	400-650-540	335.16		
01-04397	PRIMAL WEAR INC	146711	JERSERY	I 201805294318	5/10/2018	751.00	
			JERSERY	001-340-650	731.00		
			SHIPPING	001-340-650	20.00		
01-05379	PYRO SHOWS INC	146712	FIREWORKS -FINAL PYMT -BALLOON	I 201805314431	5/17/2018	6,000.00	
			FIREWORKS -FINAL PYMT -BALLOON	001-340-650	6,000.00		
01-58550	QUALITY CHEMICAL & SUPPLY	146713	JANITORIAL SUPPLIES	I 181217	5/07/2018	229.32	
			NEUTRAL DISINFECTANT	001-100-510	97.32		
			LIL BIG ROLLS	001-100-540	132.00		
01-58550	QUALITY CHEMICAL & SUPPLY	146714	DEGREASER 4 SIDEWALK	I 181235	5/08/2018	17.15	
			DEGREASER 4 SIDEWALK	001-100-540	17.15		
01-58550	QUALITY CHEMICAL & SUPPLY	146715	FD-STATION 2	I 181357	5/17/2018	134.26	
			TOILET TISSUE	001-160-510	52.00		
			CENTERPULL TOWELS	001-160-510	38.31		
			HOUSEHOLD TOWELS	001-160-510	29.31		
			SLIDE ON MOP HEADS	001-160-510	14.64		
01-58550	QUALITY CHEMICAL & SUPPLY	146716	FD-PAPER TOWELS	I 181368	5/18/2018	329.10	
			PAPER TOWELS	001-160-510	175.86		
			CENTERPULL TOWELS	001-160-510	153.24		
01-58550	QUALITY CHEMICAL & SUPPLY	146717	FLOOR STRIPPER	I 181438	5/24/2018	28.86	
			FLOOR STRIPPER	001-100-510	28.86		
01-03095	RAMSEY, BRIAN	146718	ADV TRAV: 06-24-18 - 06-28-18	I 201805314434	5/15/2018	436.31	
			ADV TRAV: 06-24-18 - 06-28-18	001-020-610	436.31		

VENDOR NUMBER	NAME	DOCKET NUMBER	COMMENT	INVOICE NUMBER	DATE	AMOUNT
01-60825	RICK'S PRO TRUCK & AUTO A	146719	INITIAL STRIPING	I 13756	4/30/2018	3,900.00
			INITIAL STRIPING	001-100-632	3,900.00	
01-00886	RICKY BRIDGES	146720	PULL SEWER PUMP	I 700797	5/11/2018	500.00
			PULL SEWER PUMP	400-650-603	500.00	
01-04133	RIDGETOWNE ANIMAL HOSPITA	146721	DASUQUIN CHEWS-BIKKEL	I 201805114303	4/30/2018	95.54
			DASUQUIN CHEWS-BIKKEL	001-100-540	95.54	
01-02496	RJ YOUNG COMPANY	146722	C-JC1548: 04-11-18 - 05-10-18	I INV2477041	5/11/2018	3,822.30
			C-JC1548: 04-11-18 - 05-10-18	001-010-635	460.37	
			C-JC1548: 04-11-18 - 05-10-18	001-020-635	27.02	
			C-JC1548: 04-11-18 - 05-10-18	001-040-635	400.95	
			C-JC1548: 04-11-18 - 05-10-18	001-080-635	27.02	
			C-JC1548: 04-11-18 - 05-10-18	001-100-635	1,588.40	
			C-JC1548: 04-11-18 - 05-10-18	001-160-635	479.66	
			C-JC1548: 04-11-18 - 05-10-18	001-180-635	54.04	
			C-JC1548: 04-11-18 - 05-10-18	400-650-635	689.08	
			C-JC1548: 04-11-18 - 05-10-18	001-201-635	61.39	
			C-JC1548: 04-11-18 - 05-10-18	001-340-635	34.37	
01-01424	ROBERSON, WILLIAM E	146723	6GAMES@25.00: MAY 21&24, 2018	I 201805314433	5/24/2018	150.00
			6GAMES@25.00: MAY 21&24, 2018	001-340-690	150.00	
01-01077	RON TURLEY ASSOCIATES INC	146724	ANNUAL MAINT. AGREEMENT	I 52151	5/01/2018	1,050.00
			ANNUAL MAINT. AGREEMENT	400-650-635	1,000.00	
			SOFTWARE UPDATE	400-650-635	50.00	
01-62271	S T O R M	146725	STORM CONFERENCE FEE	I 0126	5/22/2018	30.00
			STORM CONF. WIELGOSZ	001-100-681	30.00	
01-03736	MIKE SAXTON'S GARAGE	146726	FD-RESCUE 1	I 4074	5/14/2018	724.00
			TOW BILL	001-160-632	150.00	
			BODY CONTROL MODULE	001-160-632	190.00	
			LABOR	001-160-632	360.00	
			EPA & SHOP CHARGE	001-160-632	11.00	
			FREIGHT	001-160-632	13.00	
01-04563	SCHEMMEL, LAWRENCE	146727	6 GAMES @ $25.00; MAY 7 & 8	I 201805294322	5/08/2018	150.00
			6 GAMES @ $25.00; MAY 7 & 8	001-340-690	150.00	
01-04563	SCHEMMEL, LAWRENCE	146728	3 GAMES @ $25.00; MAY 14	I 201805294323	5/14/2018	75.00
			3 GAMES @ $25.00; MAY 14	001-340-690	75.00	
01-04563	SCHEMMEL, LAWRENCE	146729	6 GAMES @ $25.00; MAY 21 & 24	I 201805294324	5/24/2018	150.00
			6 GAMES @ $25.00; MAY 21 & 24	001-340-690	150.00	
01-64300	SHERWIN WILLIAMS	146730	FD-HYDRANT PAINT	I 0313-9	4/25/2018	1,413.45
			HYDRANT PAINT	001-160-540	1,359.60	
			FREIGHT	001-160-540	53.85	

VENDOR NUMBER	NAME	DOCKET NUMBER	COMMENT	INVOICE NUMBER	DATE	AMOUNT
01-04854	SITEONE LANDSCAPE SUPPLY	146731	FLOWERS	I 85593519	5/04/2018	1,576.25
			CALADIUM BICOLOR	001-340-575	320.00	
			VINCA MINOR	001-340-575	273.00	
			IMPATIENS WALLERIANA	001-340-575	105.00	
			TAGETES PATULA	001-340-575	357.00	
			SALVIA G BLACK/BLUE	001-340-575	146.25	
			TRACHELOSPERMUM	001-340-575	195.00	
			HYDRANGEA	001-340-575	75.00	
			HERMEROCALLIS	001-340-575	105.00	
01-64965	SKEEN PLUMBING & GAS INC	146732	REPAIR PLUBING	I A58971	5/04/2018	495.00
			REPAIR PLUBING	400-650-603	495.00	
01-03978	SMITH, DOUGLAS I.	146733	ADV TRAV: 06-24-18 - 06-28-18	I 201805314439	5/15/2018	436.31
			ADV TRAV: 06-24-18 - 06-28-18	001-020-610	436.31	
01-03716	SMITH, JAMES E.	146734	6 GAMES @ $25.00; MAY 8 & 10	I 201805294325	5/10/2018	150.00
			6 GAMES @ $25.00; MAY 8 & 10	001-340-690	150.00	
01-03716	SMITH, JAMES E.	146735	3 GAMES @ $25.00; MAY 17	I 201805294326	5/17/2018	75.00
			3 GAMES @ $25.00; MAY 17	001-340-690	75.00	
01-03716	SMITH, JAMES E.	146736	5 GAMES @ $25.00; MAY 21,22&24	I 201805294327	5/24/2018	125.00
			5 GAMES @ $25.00; MAY 21,22&24	001-340-690	125.00	
01-02421	SMITH, MICHAEL J.	146737	MAY 21, 2018 MEETING	I 052118	5/21/2018	50.00
			MAY 21, 2018 MEETING	001-093-611	50.00	
01-05154	SOLSTICE SUNGLASS BOUTIQU	146738	OVRPYMNT FOR PRIVILEGE LICENSE	I 201805294366	5/14/2018	6.00
			OVRPYMNT FOR PRIVILEGE LICENSE	001-000-351	6.00	
01-65950	SOUTHERN ADMINISTRATORS	146739	COMPANY# 106: JUNE 2018	I 18052310600000	5/23/2018	531.16
			COMPANY# 106: JUNE 2018	001-010-481	14.00	
			COMPANY# 106: JUNE 2018	001-020-481	14.00	
			COMPANY# 106: JUNE 2018	001-040-481	10.50	
			COMPANY# 106: JUNE 2018	001-092-481	1.75	
			COMPANY# 106: JUNE 2018	001-040-481	1.75	
			COMPANY# 106: JUNE 2018	001-100-481	78.75	
			COMPANY# 106: JUNE 2018	001-160-481	59.50	
			COMPANY# 106: JUNE 2018	001-180-481	12.25	
			COMPANY# 106: JUNE 2018	001-201-481	26.25	
			COMPANY# 106: JUNE 2018	001-340-481	19.25	
			COMPANY# 106: JUNE 2018	005-101-481	1.75	
			COMPANY# 106: JUNE 2018	400-650-481	36.75	
			COMPANY# 106: JUNE 2018	404-650-481	3.50	
			COMPANY# 106: JUNE 2018	001-000-170	212.68	
			COMPANY# 106: JUNE 2018	005-000-170	1.50	
			COMPANY# 106: JUNE 2018	400-000-170	33.98	
			COMPANY# 106: JUNE 2018	404-000-170	3.00	
01-04608	SOUTHERN AG CREDIT FLCA	146740	REFUND OF BUILDING PERMIT FEES	I 201805314438	5/16/2018	381.99

VENDOR NUMBER	NAME	DOCKET NUMBER	COMMENT		INVOICE NUMBER	DATE	AMOUNT	
01-04608	SOUTHERN AG CREDIT FLCA	146740	REFUND OF BUILDING PERMIT FEES	I	201805314438	5/16/2018	381.99	CONT
			REFUND OF BUILDING PERMIT FEES		001-000-153	381.99		
01-03210	SOUTHERN CONNECTION POLIC	146741	FD-CULBERTSON	I	10202	5/09/2018	99.98	
			PANTS		001-160-535	99.98		
01-03210	SOUTHERN CONNECTION POLIC	146742	FD-STOKES	I	10210	5/11/2018	152.96	
			PANTS		001-160-535	89.98		
			SHIRTS		001-160-535	62.98		
01-03210	SOUTHERN CONNECTION POLIC	146743	FD-WOODS	I	10214	5/11/2018	49.99	
			PANTS		001-160-535	49.99		
01-03210	SOUTHERN CONNECTION POLIC	146744	COURT SERVICES UNIFORMS	I	10237	5/16/2018	469.80	
			BLACK POLO LARGE		001-010-535	30.60		
			BLUE POLO LARGE		001-010-535	30.60		
			BLUE POLO XL		001-010-535	91.80		
			BLUE POLO XXL		001-010-535	30.60		
			BLUE POLO XXXL		001-010-535	32.40		
			BLUE XXXXL		001-010-535	34.20		
			CHARCOAL POLO LG		001-010-535	30.60		
			CHARCOAL POLO XL		001-010-535	91.80		
			CHARCOAL POLO XXL		001-010-535	30.60		
			CHARCOAL POLO XXXL		001-010-535	32.40		
			CHARCOAL POLO XXXXL		001-010-535	34.20		
01-03210	SOUTHERN CONNECTION POLIC	146745	ANNUAL UNIFORMS-CHAPIN	I	10238	5/16/2018	99.00	
			HI-VIZ POLO CHAPIN		001-100-535	99.00		
01-03210	SOUTHERN CONNECTION POLIC	146746	NOEL BASS UNIFORM TOPS	I	10266	5/18/2018	99.00	
			NOEL BASS UNIFORM TOPS		001-100-535	99.00		
01-04466	SOUTHERN FINANCIAL SYSTEM	146747	CMCRID4: 04-01-18 - 05-03-18	I	201805314435	5/03/2018	334.75	
			CMCRID4: 04-01-18 - 05-03-18		001-000-115	334.75		
01-04466	SOUTHERN FINANCIAL SYSTEM	146748	UTLRID4: 04-01-18 - 05-03-18	I	201805314436	5/03/2018	69.85	
			UTLRID4: 04-01-18 - 05-03-18		400-000-115	69.85		
01-05190	STAAB, COREY M.	146749	3 GAMES @ $25.00; MAY 3	I	201805294328	5/03/2018	75.00	
			3 GAMES @ $25.00; MAY 3		001-340-690	75.00		
01-05130	STANTON OPTICAL	146750	OVRPYMNT FOR PRIVILEGE LICENSE	I	201805294365	5/01/2018	27.25	
			OVRPYMNT FOR PRIVILEGE LICENSE		001-000-351	27.25		
01-68200	STATE TREASURER	146751	APRIL 2018	I	201805314437	5/10/2018	65,941.00	
			APRIL 2018		001-000-107	941.67		
			APRIL 2018		001-000-113	6,947.07		
			APRIL 2018		001-000-114	230.00		
			APRIL 2018		001-000-332	57,317.58		
			APRIL 2018		001-000-116	450.63		
			APRIL 2018		001-000-117	54.05		

VENDOR NUMBER	NAME	DOCKET NUMBER	COMMENT	INVOICE NUMBER	DATE	AMOUNT
01-05363	STRAW DEPOT LLC	146752	PINE STRAW	I 2227	5/03/2018	237.50
			210 BAILS PINE STRAW	001-201-540	237.50	
01-05363	STRAW DEPOT LLC	146753	PINE STRAW	I 2228	5/03/2018	237.50
			210 BAILS PINE STRAW	001-201-540	237.50	
01-05363	STRAW DEPOT LLC	146754	PINE STRAW	I 2248	5/07/2018	736.25
			PINE STRAW	001-201-540	736.25	
01-04665	STRODE, RAYMOND	146755	9 GAMES @ $25.00; MAY 7, 8 &10	I 201805294329	5/10/2018	225.00
			9 GAMES @ $25.00; MAY 7, 8 &10	001-340-690	225.00	
01-04665	STRODE, RAYMOND	146756	3 GAMES @ $25.00; MAY 17	I 201805294330	5/17/2018	75.00
			3 GAMES @ $25.00; MAY 17	001-340-690	75.00	
01-04665	STRODE, RAYMOND	146757	3 GAMES @ $25.00; MAY 21	I 201805294331	5/21/2018	75.00
			3 GAMES @ $25.00; MAY 21	001-340-690	75.00	
01-68950	SUBER, CONNIE	146758	MAY 22, 2018 MEETING	I 052218	5/22/2018	50.00
			MAY 22, 2018 MEETING	001-180-611	50.00	
01-69095	SULLIVAN ELECTRIC	146759	FD-STATION 4	I 137107	5/11/2018	1,372.00
			90' 1/2" EMT	001-160-637	55.00	
			600' #12 THHN STRAND	001-160-637	85.00	
			2GANG RECEPT BOX COV	001-160-637	10.00	
			20 AMP RECEPTACLE	001-160-637	12.00	
			RETRACT. REEL	001-160-637	85.00	
			MISC. PARTS	001-160-637	45.00	
			LABOR	001-160-637	1,080.00	
01-69095	SULLIVAN ELECTRIC	146760	SERVICE CALLS	I 137108	5/24/2018	4,005.00
			TIME CLOCK	001-340-637	540.00	
			WALKING TRAIL	001-340-637	405.00	
			EXPOSED WIRE/COVERS	001-340-637	1,800.00	
			TENNIS CENTER	001-340-637	450.00	
			FRP/WOLCOTT	001-340-637	810.00	
01-00845	SUNCOAST INFRASTRUCTURE I	146761	HEAVY CLEANING SEWERS	I S18031-01	5/11/2018	11,381.45
			HEAVY CLEANING SEWERS	400-650-603	4,198.95	
			TV INSPECTION	400-650-603	4,882.50	
			MOBILIZATION	400-650-603	2,300.00	
01-69790	T S C INC	146762	WINDSCREENS	I 19038-1	5/21/2018	1,430.00
			3'x8' WINDSCREENS	001-340-540	700.00	
			3'x6' WINDSCREENS	001-340-540	730.00	
01-05406	TERRELL, BOB	146763	REFUND FOR CENTURY RIDE JERSEY	I 201805314440	5/31/2018	55.00
			REFUND FOR CENTURY RIDE JERSEY	001-000-313	55.00	
01-05031	TERRY SERVICE INC	146764	MAY 2018 SERVICES	I 59335	5/18/2018	4,159.00
			MAY 2018 SERVICES	001-092-637	291.13	

VENDOR NUMBER	NAME	DOCKET NUMBER	COMMENT	INVOICE NUMBER	DATE	AMOUNT	
01-05031	TERRY SERVICE INC	146764	MAY 2018 SERVICES	I 59335	5/18/2018	4,159.00	CONT
			MAY 2018 SERVICES	001-100-637	1,289.29		
			MAY 2018 SERVICES	001-160-637	1,122.93		
			MAY 2018 SERVICES	001-201-637	207.95		
			MAY 2018 SERVICES	001-340-637	748.62		
			MAY 2018 SERVICES	001-350-637	291.13		
			MAY 2018 SERVICES	400-650-637	207.95		
01-02437	TOSHIBA FINANCIAL SERVICE	146765	MONTHLY INSTALLMENT	I 22712080	5/24/2018	266.77	
			MONTHLY INSTALLMENT	001-340-604	266.77		
01-02852	TRANSAMERICA LIFE INSURAN	146766	0B232: 05-01-18 - 05-31-18	I 2502902394	5/31/2018	97.47	
			0B232: 05-01-18 - 05-31-18	001-000-171	97.47		
01-00493	TRAVIS PROPERTIES	146767	OVERPYMT OF PRIVILEGE LICENSE	I 201805314441	4/30/2018	20.00	
			OVERPYMT OF PRIVILEGE LICENSE	001-000-351	20.00		
01-01571	TRI-STATE TRUCK CENTER	146768	TRUCK PARTS	C FI60216	5/14/2018	690.00CR	
			CORE CREDIT	400-650-632	690.00CR		
01-01571	TRI-STATE TRUCK CENTER	146769	TRUCK PARTS	I FI59581	5/09/2018	264.46	
			U-JOINT KIT	400-650-632	77.56		
			U-JOINT	400-650-632	186.90		
01-01571	TRI-STATE TRUCK CENTER	146770	TRUCK PARTS	I FI59646	5/14/2018	185.12	
			FLANGE BEARING	400-650-632	185.12		
01-01571	TRI-STATE TRUCK CENTER	146771	TRUCK PARTS	I FI60165	5/14/2018	2,220.00	
			DIFFERENTIAL	400-650-632	1,530.00		
			CORE CHARGE	400-650-632	690.00		
01-01571	TRI-STATE TRUCK CENTER	146772	BELT	I FI61506	5/23/2018	50.86	
			BELT	001-201-632	50.86		
01-02393	TYLER TECHNOLOGIES	146773	JUNE 2018	I 025-224903	6/01/2018	370.00	
			JUNE 2018	400-650-604	370.00		
01-00920	U S A CYCLING INC	146774	INSURANCE FEE	I 104	5/11/2018	1,619.75	
			INSURANCE FEE	001-340-650	1,619.75		
01-03890	U.S. BANK EQUIPMENT FINAN	146775	797947: TELEPHONE CONTRACT	I 357930254	5/18/2018	2,059.00	
			797947: TELEPHONE CONTRACT	001-450-833	1,855.23		
			797947: TELEPHONE CONTRACT	001-450-834	203.77		
01-00544	U.S. LAWNS OF JACKSON	146776	IRRIGATION REPAIR	I 38881	5/14/2018	131.00	
			IRRIGATION REPAIR	001-201-604	131.00		
01-03710	UNION AUTO PARTS	146777	COOLANT FOR P295	I 1189054-00	5/07/2018	31.88	
			COOLANT FOR P295	001-100-632	31.88		
01-03710	UNION AUTO PARTS	146778	COOLANT FOR P295	I 1189198-00	5/07/2018	137.78	
			REAR SHOCKS FOR P295	001-100-632	137.78		

VENDOR NUMBER	NAME	DOCKET NUMBER	COMMENT	INVOICE NUMBER	DATE	AMOUNT
01-03710	UNION AUTO PARTS	146779	WINSHIELD ADHESIVE	I 1190290-00	5/08/2018	15.18
			WINSHIELD ADHESIVE	001-100-632	15.18	
01-03710	UNION AUTO PARTS	146780	TRUCK PARTS	I 1190467-00	5/08/2018	282.48
			ENVAPORATOR CORE	400-650-632	159.88	
			HEATER CORE	400-650-632	122.60	
01-03710	UNION AUTO PARTS	146781	TRUCK PARTS	I 1190677-00	5/08/2018	26.72
			PRESSURE SWITCH	400-650-632	26.72	
01-03710	UNION AUTO PARTS	146782	WINSHIELD ADHESIVE	I 1190904-00	5/08/2018	3.08
			SPARKPLUG 4 WASHER	001-100-540	3.08	
01-03710	UNION AUTO PARTS	146783	PARTS	I 1190919-00	5/08/2018	214.65
			COOLANT	001-340-632	37.59	
			COOLANT DRAIN	001-340-632	17.46	
			UPPER RADIATOR HOSE	001-340-632	64.03	
			LOWER HOSE	001-340-632	46.19	
			LOWER HOSE	001-340-632	49.38	
01-03710	UNION AUTO PARTS	146784	TRUCK PARTS	I 1191227-00	5/09/2018	31.55
			MOTOR RISISTOR	400-650-632	31.55	
01-03710	UNION AUTO PARTS	146785	TRUCK PARTS	I 1191400-00	5/09/2018	124.34
			PUMP KIT	400-650-632	124.34	
01-03710	UNION AUTO PARTS	146786	AIR FILTER PRESS. WASHER	I 1191858-00	5/09/2018	11.49
			AIR FILTER PRESS. WASHER	001-100-632	11.49	
01-03710	UNION AUTO PARTS	146787	P329 COILPACK	I 1195438-00	5/14/2018	69.07
			P329 COILPACK	001-100-632	69.07	
01-03710	UNION AUTO PARTS	146788	TRUCK PARTS	I 1195579-00	5/15/2018	50.87
			TIRE PRESSURE SENSOR	001-201-632	50.87	
01-03710	UNION AUTO PARTS	146789	P309 OIL PRESSURE SENDING	I 1195881-00	5/15/2018	54.40
			P309 OIL PRESSURE SENDING	001-100-632	54.40	
01-03710	UNION AUTO PARTS	146790	REAR PADS P325	I 1196848-00	5/16/2018	81.05
			REAR PADS P325	001-100-632	81.05	
01-03710	UNION AUTO PARTS	146791	COMPRESSOR	I 1200028-00	5/21/2018	328.46
			COMPRESSOR	400-650-632	279.89	
			DRYER	400-650-632	44.19	
			ORFICE TUBE	400-650-632	4.38	
01-03710	UNION AUTO PARTS	146792	COMPRESSOR	I 1200260-00	5/21/2018	9.36
			GAS CAP	001-201-632	9.36	
01-03710	UNION AUTO PARTS	146793	WIPERS	I 1200877-00	5/21/2018	22.38
			WINDSHIELD WIPERS	001-180-632	22.38	

VENDOR NUMBER	NAME	DOCKET NUMBER	COMMENT	INVOICE NUMBER	DATE	AMOUNT
01-03710	UNION AUTO PARTS	146794	P316 LATERAL ARMS	I 1201083-00	5/22/2018	228.88
			P316 LATERAL ARMS	001-100-632	228.88	
01-03710	UNION AUTO PARTS	146795	COMPRESSOR	I 1201815-00	5/22/2018	156.76
			BLOWER MOTOR	400-650-632	120.95	
			RESISTOR	400-650-632	35.81	
01-74275	UPCHURCH, DEBBIE	146796	MAY 21, 2018 MEETING	I 052118	5/21/2018	50.00
			MAY 21, 2018 MEETING	001-093-611	50.00	
01-01663	UTILITY SERVICE CO, INC	146797	PEDISPHERE WEST TANK	I 447295	5/01/2018	4,555.38
			PEDISPHERE WEST TANK	400-650-604	4,555.38	
01-02456	W F M N-FM SUPERTALK MS	146798	KID FEST ADVERTISEMENT	I 4787-00026-0000	4/30/2018	1,000.00
			KID FEST ADVERTISEMENT	001-340-615	1,000.00	
01-75100	WAGGONER ENGINEERING, INC	146799	PROJECT# 0017001.000	I 34614	4/11/2018	1,209.07
			PROJECT# 0017001.000	378-601-600	788.82	
			PROJECT# 0017001.000	001-094-600	206.25	
			PROJECT# 0017001.000	317-601-600	214.00	
01-75100	WAGGONER ENGINEERING, INC	146800	PROJECT# 107557-701000	I 34673	5/08/2018	36,378.63
			PROJECT# 107557-701000	317-601-600	36,378.63	
01-75100	WAGGONER ENGINEERING, INC	146801	PROJECT HPP-8323-00(004)LPA 10	I 34681	5/08/2018	17,580.85
			PROJECT HPP-8323-00(004)LPA 10	378-601-600	17,580.85	
01-75450	WALMART	146802	JANITORIAL SUPPLIES	I 00631	5/14/2018	218.78
			COMET	001-092-510	4.15	
			FEBREEZE	001-092-510	9.88	
			PLEDGE DUST-ALL	001-092-510	8.46	
			ROACH KILLER	001-092-510	7.48	
			BAKING SODA	001-092-510	1.44	
			CLOROX WIPES	001-092-510	9.23	
			WINDEX REFILL	001-092-510	5.44	
			CHARMIN 20 MEGA ROLL	001-092-510	94.85	
			GV 3PK PAPERTOWEL	001-092-510	19.40	
			LYSOL WIPES	001-092-510	3.67	
			LYSOL SPRAY	001-092-510	54.78	
01-75450	WALMART	146803	FD - PSDS CLASS/CENTRAL	I 01681	5/10/2018	185.24
			CABLE	001-160-510	4.77	
			CASCADE GEL	001-160-510	20.52	
			LYSOL BATHROOM CL	001-160-510	11.88	
			SCRUB SPONGE	001-160-510	12.34	
			SCENTED OIL	001-160-510	6.48	
			WINDSHELD WASHER	001-160-510	8.52	
			COFFEE	001-160-540	29.92	
			CREAMER	001-160-540	6.34	
			SPLENDA	001-160-540	6.47	
			STIRRERS	001-160-540	2.87	

VENDOR NUMBER	NAME	DOCKET NUMBER	COMMENT	INVOICE NUMBER	DATE	AMOUNT	
01-75450	WALMART	146803	FD - PSDS CLASS/CENTRAL	I 01681	5/10/2018	185.24	CONT
			SUGAR	001-160-540	7.15		
			GATORADE	001-160-540	29.90		
			WATER	001-160-540	7.96		
			CRACKERS	001-160-540	7.08		
			NATURE VALLEY BARS	001-160-540	5.34		
			POP TARTS	001-160-540	14.72		
			NATURE VALLEY OATM	001-160-540	2.98		
01-75450	WALMART	146804	SHIPPING ENVELOPES	I 02442	5/15/2018	23.52	
			SHIPPING ENVELOPES	001-340-500	23.52		
01-75450	WALMART	146805	WALMART - DIVE CLASS	I 07026A	5/04/2018	111.25	
			GATORADE	001-160-540	23.92		
			WATER	001-160-540	11.94		
			COFFEE	001-160-540	9.88		
			CRACKERS	001-160-540	7.08		
			FIG BARS	001-160-540	5.56		
			NUTRIGRAIN BAR	001-160-540	4.24		
			POP TARTS	001-160-540	7.36		
			CASHEW BAR	001-160-540	4.63		
			NATURE VALLEY BAR	001-160-540	2.92		
			CREAMER	001-160-540	2.46		
			CREAMER	001-160-540	5.57		
			DRY ERASE BOARD	001-160-540	8.87		
			DRY ERASE BOARD	001-160-540	6.97		
			DRY ERASE BOARD	001-160-540	1.97		
			CARB CLEANER	001-160-635	7.88		
01-75450	WALMART	146806	SUPPLIES	I 08837A	5/11/2018	62.52	
			MINI MUFFINS	001-340-650	29.80		
			WATER	001-340-650	6.86		
			CRACKERS	001-340-650	3.12		
			MT DEW	001-340-650	6.98		
			COKE	001-340-650	15.76		
01-75790	WARREN FIRST AID & SUPPLY	146807	SAFETY SUPPLIES	I 4887	5/14/2018	162.70	
			TAPE TRI-CUT	001-201-540	6.50		
			2" BANDAGE	001-201-540	1.95		
			3" BANDAGE	001-201-540	2.25		
			ANTISEPTIC WIPE	001-201-540	3.95		
			ANTISEPTIC SPRAY	001-201-540	5.75		
			TRIPLE ANTIBIOTIC	001-201-540	8.50		
			EYE WASH 1/2OZ	001-201-540	5.00		
			3" COBAN	001-201-540	4.95		
			PAIN ZAPPER	400-650-540	11.95		
			BAYER ASPIRIN	400-650-540	10.95		
			ALEVE	400-650-540	24.95		
			SAFETY VEST XL	400-650-540	51.00		
			RAIN SUIT 2XL	400-650-540	25.00		
01-75790	WARREN FIRST AID & SUPPLY	146808	FIRST AID RESTOCK	I 4889	5/14/2018	66.15	

VENDOR NUMBER	NAME	DOCKET NUMBER	COMMENT	INVOICE NUMBER	DATE	AMOUNT	
01-75790	WARREN FIRST AID & SUPPLY	146808	FIRST AID RESTOCK	I 4889	5/14/2018	66.15	CONT
			LORATADINE 10MG	001-040-540	27.50		
			LIQUID BANDAGE	001-040-540	14.75		
			PAIN RELIEF GEL 10PK	001-040-540	11.95		
			ANTACID SINGLES BOX	001-040-540	11.95		
01-75900	WASTE MANAGEMENT OF MS	146809	05-01-18 - 05-31-18	I 2866350-0078-4	5/22/2018	1,100.00	
			05-01-18 - 05-31-18	001-340-682	800.00		
			05-01-18 - 05-31-18	001-201-682	80.00		
			05-01-18 - 05-31-18	400-650-682	80.00		
			05-01-18 - 05-31-18	001-100-682	80.00		
			05-01-18 - 05-31-18	001-350-682	60.00		
01-04506	WELLS MARBLE & HURST PLLC	146810	2014 ZONING ORDINANCE	I 114236	5/07/2018	265.00	
			2014 ZONING ORDINANCE	001-180-601	265.00		
01-04391	WILLOUGHBY PAINTING LLC	146811	PAINT OFFICE	I 15411	5/10/2018	450.00	
			PAINT OFFICE	001-092-637	450.00		
01-05392	ROBIN WOODY	146812	5 GAMES @ $10.00; MAY 7 & 8	I 201805294319	5/08/2018	50.00	
			5 GAMES @ $10.00; MAY 7 & 8	001-340-690	50.00		
01-05392	ROBIN WOODY	146813	6 GAMES @ $10.00; MAY 14 & 17	I 201805294320	5/17/2018	60.00	
			6 GAMES @ $10.00; MAY 14 & 17	001-340-690	60.00		
01-05392	ROBIN WOODY	146814	11 GAMES @ $10; MAY 21, 22 &24	I 201805294321	5/24/2018	110.00	
			11 GAMES @ $10; MAY 21, 22 &24	001-340-690	110.00		
01-02983	YELVERTON CONSULTING, LLC	146815	JUNE 2018 FEES	I 201805314444	5/28/2018	3,000.00	
			JUNE 2018 FEES	001-020-604	3,000.00		

TOTAL = 1,588,189.95

FUND TOTALS

FUND	NAME	TOTAL
001	GENERAL FUND	319,312.78
005	COURT SERVICES FEE FUND	2,116.57
007	TREE MITIGATION FUND	5,504.23
103	FORFEITURE AND SEIZURE	253.40
317	E LAKE HARBOUR OVERLAY	38,392.63
362	COLONY PARK BLVD	825.00
366	COUNTY LINE MILLING/OVRLY	1,100,947.42
378	LAKE HARBOUR DR EXT	18,369.67
400	PUBLIC UTILITIES FUND	99,561.38
404	EMCRS OPERATION & MAINT	2,906.87
	TOTALS FOR ALL FUNDS =	1,588,189.95

DEPT: ALL
PAYROLL NO#: 01
PAY PERIOD BEGINNING: 4/20/2018
PAY PERIOD ENDING: 5/03/2018

MAY 15, 2018 Supplemental payroll

*** GRAND TOTALS ***

EARNINGS			BENF/REIMB		DEDUCTIONS				TAXES			
DESC	HRS	AMOUNT	DESC	AMOUNT	CD	ABBV	EMPLOYEE	EMPLOYER	DESC	TAXABLE	EMPLOYEE	EMPLOYER
REG	32.00	1,214.08			RET	RET	109.27	191.22	FED W/H	1,104.81	18.17	
									ST WH MS	1,104.81	32.00	
									FICA	1,214.08	75.27	75.27
									MEDI	1,214.08	17.60	17.60
TOTALS:	32.00	1,214.08		0.00			109.27	191.22			143.04	92.87

DEPARTMENT RECAP

DEPT NO#	GROSS	REGULAR	OVERTIME	LEAVE	OTHER	BENEFITS	DEDUCTIONS	TAXES	NET
001-040	1,214.08	1,214.08	0.00	0.00	0.00	0.00	109.27	143.04	961.77
TOTALS	1,214.08	1,214.08	0.00	0.00	0.00	0.00	109.27	143.04	961.77

REGULAR INPUT: 1 MANUAL INPUT: 0 CHECK STUB COUNT: 1 DIRECT DEPOSIT STUB COUNT: 0

DEPT: ALL
PAYROLL NO#: 01
PAY PERIOD BEGINNING: 5/04/2018
PAY PERIOD ENDING: 5/17/2018

MAY 25, 2018 PAYROLL

*** GRAND TOTALS ***

EARNINGS			BENF/REIMB	
DESC	HRS	AMOUNT	DESC	AMOUNT
SAL	1,052.00	41,438.04	VEH	174.00
SMON	0.00	26,317.54		
REG	19,495.25	335,309.17		
RETRO	0.00	78.03		
R/O	8.50	129.58		
O/T	269.00	5,832.50		
CE	21.38	0.00		
CMPRG	5.00	0.00		
COMP	83.00	2,219.53		
SICK	460.75	10,177.93		
VAC	915.25	20,725.85		
HOL	433.50	7,040.26		
HOLB	8.00	0.00		
FNRL	34.00	1,330.76		
MLT	152.00	3,959.20		
PARAM	0.00	1,153.85		
SHIFT	0.00	500.00		
YMCA	0.00	22.50		
TRAFF	0.00	1,981.98		
TASKF	14.00	550.20		
FUGTF	34.00	900.66		
MBNHI	14.00	370.86		

DEDUCTIONS			
CD	ABBV	EMPLOYEE	EMPLOYER
AFA	AFACC	1053.97	
AFC	AFCAN	1051.49	
AFD	AFSHO	792.82	
AFH	AFHOS	503.29	
AFS	AFSPE	276.25	
ANN	ANUTY	2234.50	
C18	CHSUP	202.50	
C19	CHSUP	130.50	
C32	CHSUP	225.00	
C33	CHSUP	25.00	
C39	CHSUP	152.50	
C42	CHSUP	147.50	
C43	CHSUP	110.00	
C54	CHSUP	72.50	
C56	CHSUP	130.00	
C57	CHSUP	75.00	
C58	CHSUP	164.00	
C59	CHSUP	285.25	
C60	CHSUP	193.00	
C61	CHSUP	90.00	
C63	CHSUP	96.00	
C66	CHSUP	107.50	
C67	CHSUP	177.50	
CAF	ADMFE	116.25	136.40
CCF	CANCF	48.74	
CFM	CFM	12.00	14.00
CHC	CHCAR	749.99	
CO5	CHSUP	75.00	
CRU	CRUN	4885.00	
D42	GARNI	25.24	
D56	GARNI	230.85	
D58	GARNI	302.79	
DCF	DENCF	2077.14	1224.96
DCM	DCM	280.77	168.90
DEN	DENTL		2182.40
DMO	DMO		56.30
FCE	FLEX	5.58	
HCF	HTHCF	13029.92	13338.39
HCM	HCM	2296.82	1933.10
HCP	HECOP		1.13
HLT	HELTH		33249.32
HMO	HMO	574.00	386.62

TAXES			
DESC	TAXABLE	EMPLOYEE	EMPLOYER
FED W/H	393,123.94	32,930.48	
ST WH MS	393,123.94	12,798.00	
FICA	435,843.36	27,022.23	27022.23
MEDI	435,843.36	6,319.67	6319.67

DEPT: ALL
PAYROLL NO#: 01
PAY PERIOD BEGINNING: 5/04/2018
PAY PERIOD ENDING: 5/17/2018

** (CONTINUED) **

DATE	ORG FN	ACCOUNT	CODE/RATE	HOURLY RATE		HOURS	AMOUNT	PROJECT		
				HRF	HRF	201.50	285.89			
				LIF	LIFE	55.61	1356.80			
				MDF	YMCA	236.00				
				PBA	POBEN	235.00				
				RET	RET	40484.92	71173.34			
				T26	TAXLE	824.39				
				UNR	UNREM	3120.62				
TOTALS:	22,999.63	460,038.44	174.00			78164.20	125507.55		79,070.38	33341.90

DEPARTMENT RECAP

DEPT NO#	GROSS	REGULAR	OVERTIME	LEAVE	OTHER	BENEFITS	DEDUCTIONS	TAXES	NET
001-010	20,652.77	20,217.17	75.56	360.04	0.00	0.00	3,394.80	3,101.93	14,156.04
001-020	16,792.53	16,468.23	0.00	324.30	0.00	0.00	6,502.78	2,212.09	8,077.66
001-040	22,046.70	21,162.16	0.00	884.54	0.00	0.00	3,640.61	3,609.26	14,796.83
001-092	1,254.40	1,128.96	0.00	125.44	0.00	0.00	348.79	141.24	764.37
001-093	6,471.42	1,105.83	0.00	5,365.59	0.00	0.00	866.57	1,537.32	4,067.53
001-100	137,669.13	115,923.05	2,399.33	14,965.02	4,381.73	0.00	20,376.05	23,684.47	93,608.61
001-160	102,179.78	91,907.12	0.00	9,118.81	1,153.85	0.00	18,702.27	18,135.21	65,342.30
001-180	23,291.67	20,699.90	0.00	2,569.27	22.50	0.00	3,909.88	4,358.36	15,023.43
001-201	50,099.94	44,308.58	1,982.86	3,624.69	81.81	102.00	7,531.14	8,294.53	34,172.27
001-340	32,743.18	30,706.74	923.06	1,113.38	0.00	0.00	3,710.49	5,942.67	23,090.02
005-101	3,770.56	3,770.56	0.00	0.00	0.00	0.00	738.45	700.22	2,331.89
400-650	40,744.35	33,370.93	407.68	6,845.97	47.77	72.00	7,890.72	7,016.28	25,765.35
404-650	2,496.01	2,295.52	44.01	156.48	0.00	0.00	551.65	336.80	1,607.56
TOTALS	460,212.44	403,064.75	5,832.50	45,453.53	5,687.66	174.00	78,164.20	79,070.38	302,803.86

REGULAR INPUT: 280 MANUAL INPUT: 0 CHECK STUB COUNT: 2 DIRECT DEPOSIT STUB COUNT: 278

Alan Hart

From: Mason Pennaman <steelbuilder05@yahoo.com>
Sent: Tuesday, May 29, 2018 9:23 PM
To: Alan Hart
Subject: Towery Update

I am so sorry for emailing so late. I am just now able to do so. We have done more work on the inside. We have put on the roof, vents and shingles. We are now working on the siding and other thing to move this job along. Thank you for your patience and help so far.

STOP

Sent from Yahoo Mail on Android